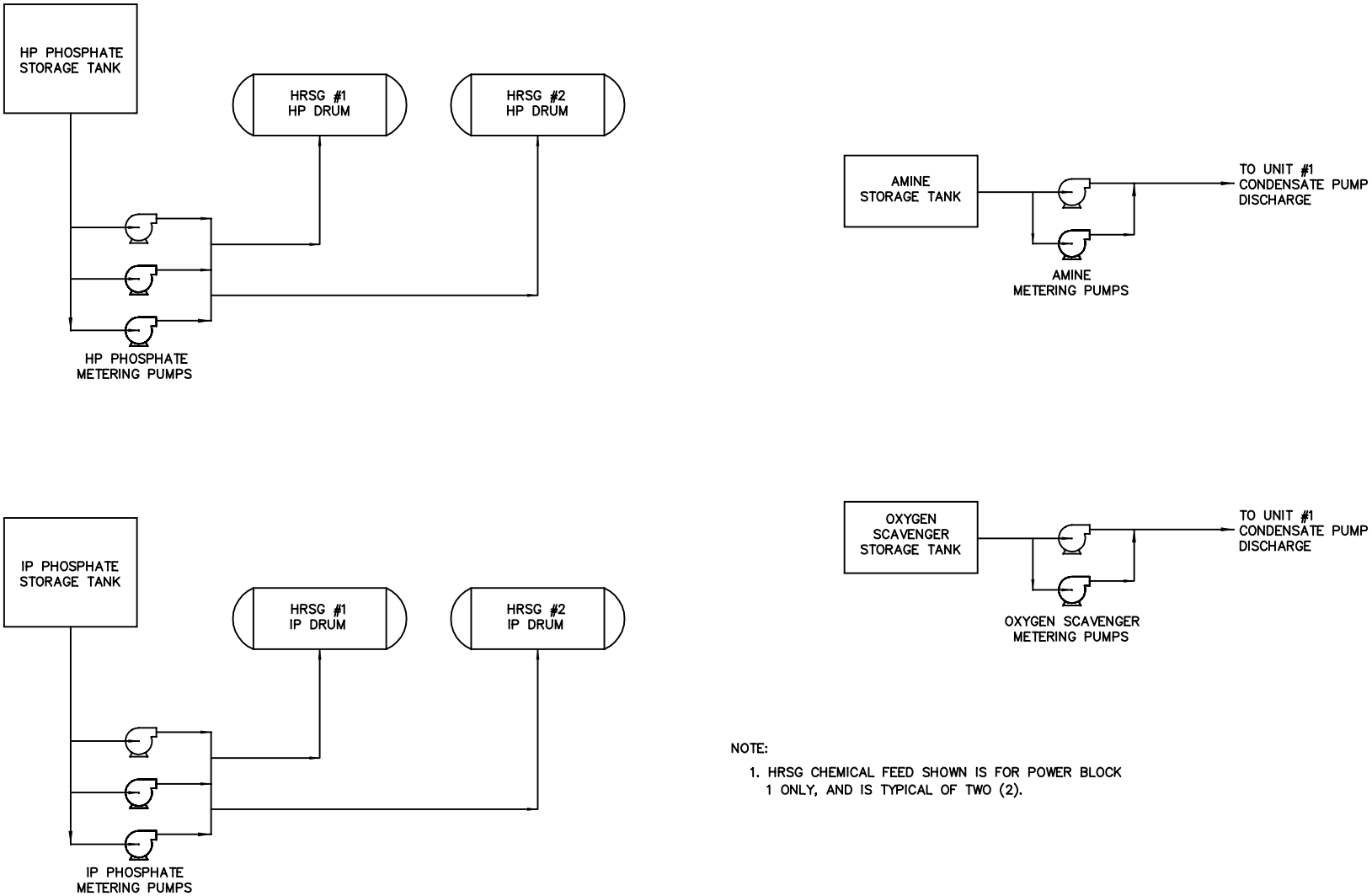

NOTE:

1. HRSG CHEMICAL FEED SHOWN IS FOR POWER BLOCK 1 ONLY, AND IS TYPICAL OF TWO (2).

UTILITY ENGINEERING

Figure 2.5.5.6-1

HRSG Chemical Feed Systems

Wallula Power Project

Project 001455-00-4000