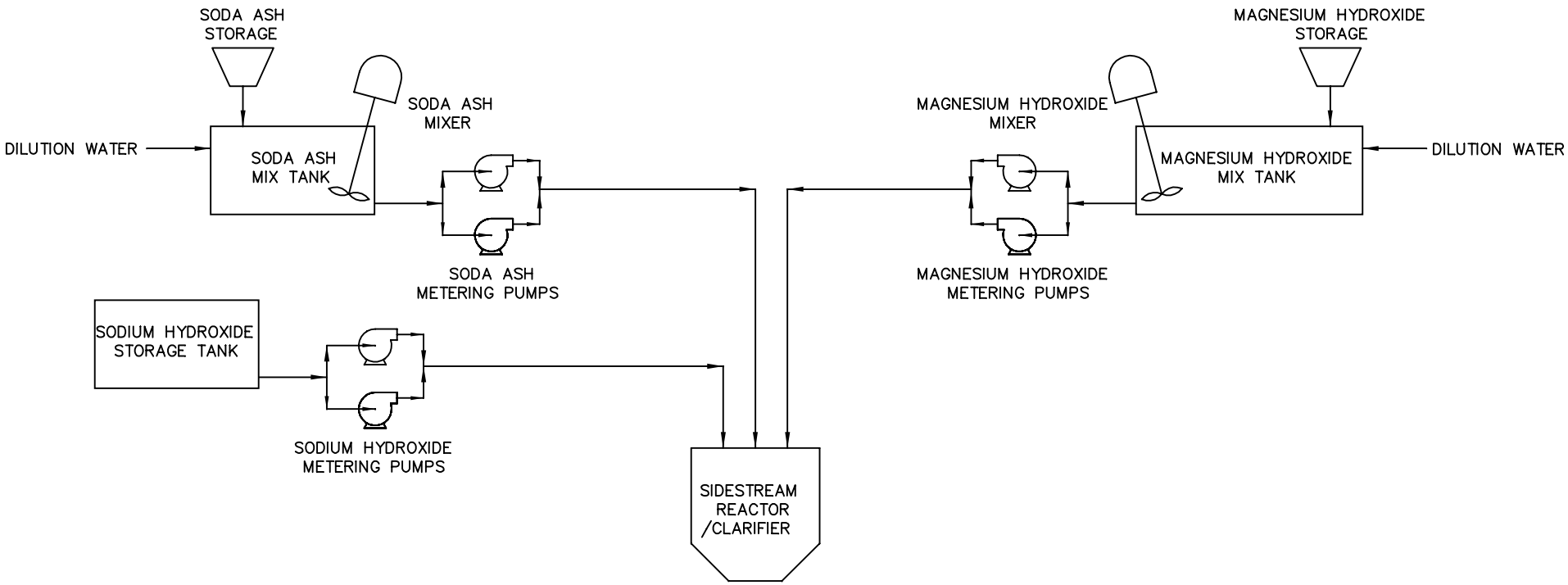

UTILITY ENGINEERING

Figure 2.5.5.4-2

Sidestream Treatment System Chemical Feed

Wallula Power Project

Project 001455-00-4000