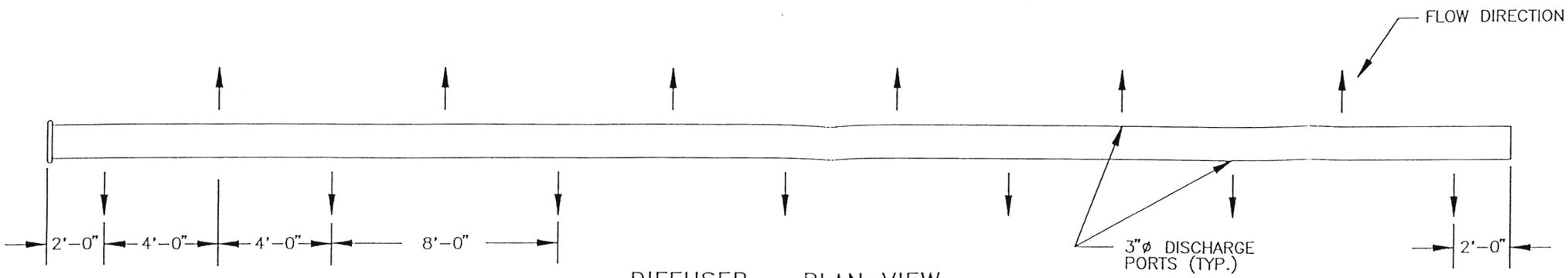

DIFFUSER – PLAN VIEW

SCALE: 1" = 4'-0"

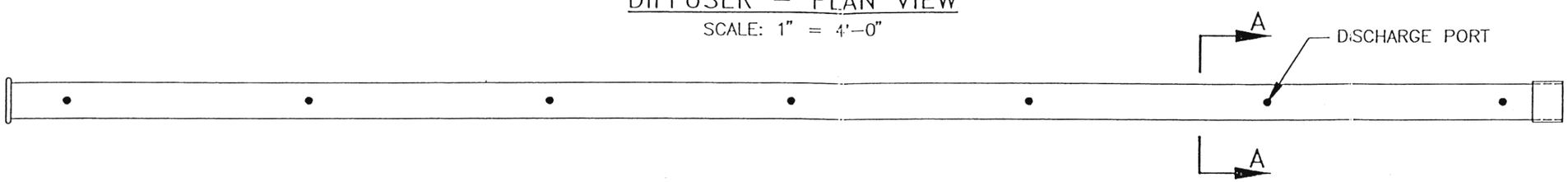

DIFFUSER – ELEV. VIEW

SCALE: 1" = 4'-0"

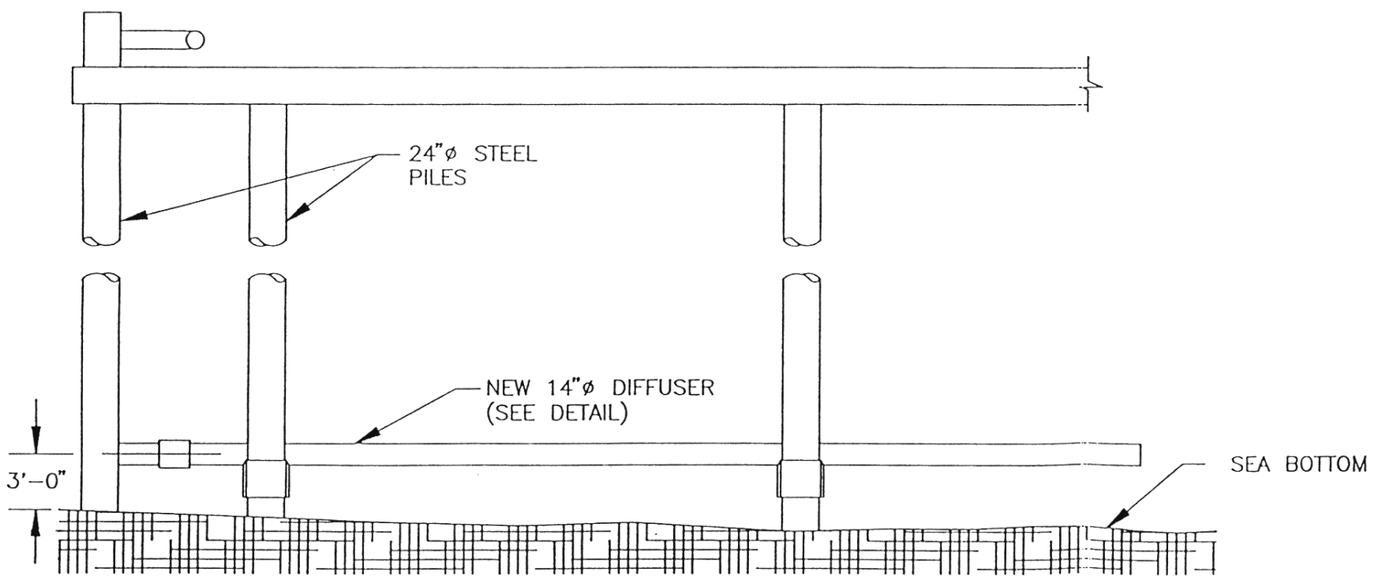

CROSS – SECTION OF DOCK AREA

SCALE: 1" = 2'-0"

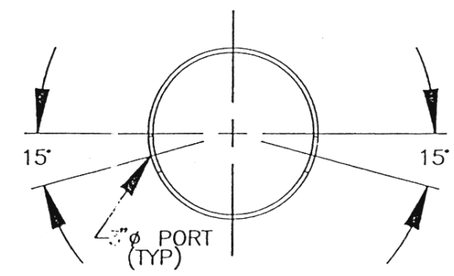

SECTION A–A

SCALE: 1" = 1'-0"

Source:
ENSR Consulting and Engineering, Job No. 0480-086-200, Figure 2-2, 1991 and
ARCO Products Division, Marine Facilities-Offshore Loading, Drawing No. RD-3500-168

Prepared by: Golder Associates

FIGURE **8.1-2**

DISCHARGE DIFFUSER DETAILS

BP/CHERRY POINT COGENERATION PROJECT/WA

PROJECT NO. 013 1421_410 DRAWING NO. 94807 DATE 12/18/01 DRAWN BY DC