BPA Line Routing

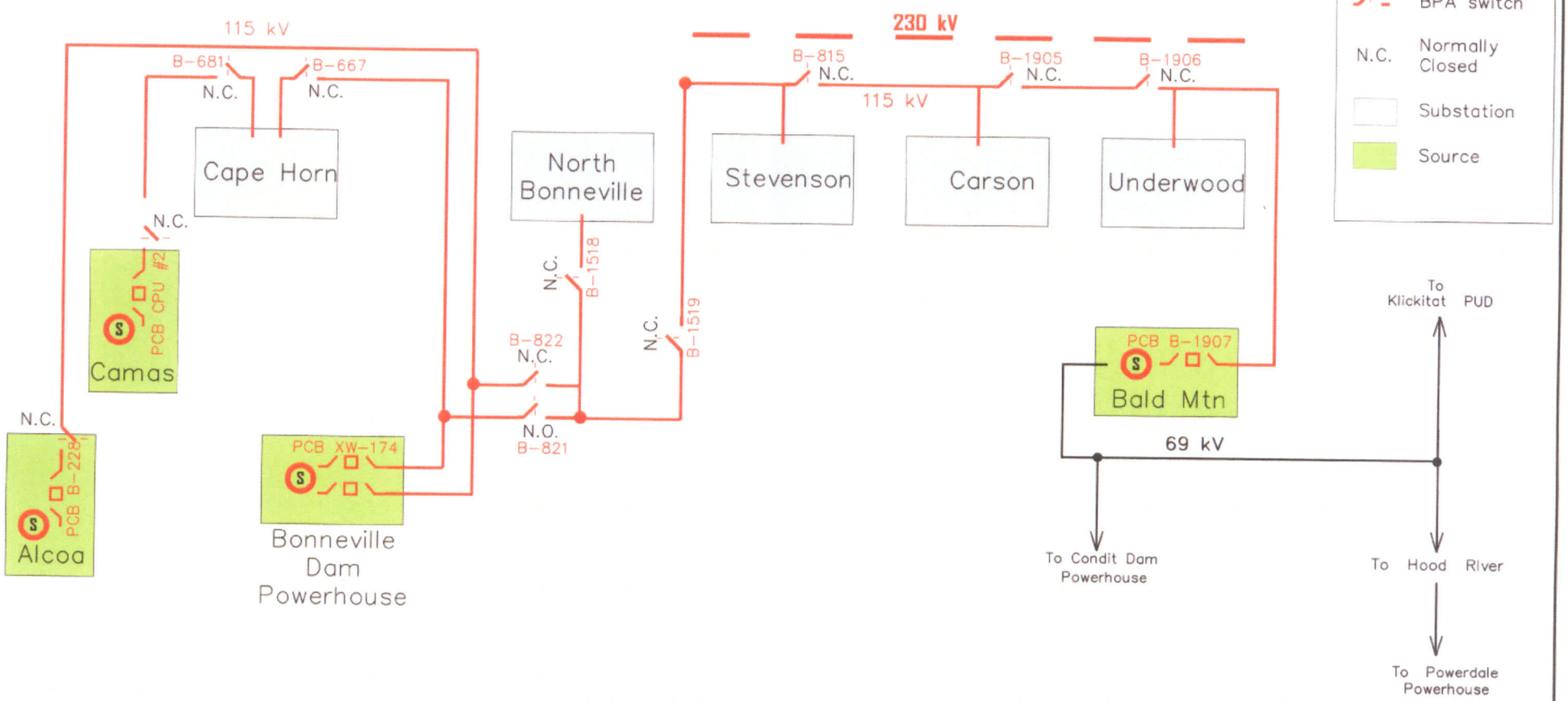

June. 2009 | Skamania PUD

BPA Line Routing