Section 5.3 Stormwater Discharge Permit Application

BergerABAM

210 East 13th Street, Suite 300, Vancouver, Washington 98660-3231
360/823-6100 • 360/823-6101 Fax • www.abam.com

27 May 2016

Mr. Stephen Posner, Manager
Energy Facility Site Evaluation Council
Washington Utilities and Transportation Commission
P.O. Box 43172
Olympia, WA 98504-3172

Subject: Vancouver Energy
EFSEC Application No. 2013-01, Docket No. EF131590
Response to 19 February 2016 Letter Regarding Industrial National Pollutant Discharge Elimination System Permit Application Review

Dear Mr. Posner:

This letter responds in part to your letter of 19 February 2016 regarding Washington State Department of Ecology (Ecology) comments on the application by Tesoro Savage Petroleum Terminal LLC (Applicant) for an Industrial National Pollutant Discharge Elimination System (NPDES) permit for Vancouver Energy. Below we have reproduced the comments, taken from your 19 February 2016 letter, in *italics* and we show our responses in regular text.

In addition, Ecology requested updates to the NPDES Engineering Report; the updates are being completed and will be submitted under separate cover for Energy Facility Site Evaluation Council (EFSEC) review.

1. City of Vancouver Pretreatment Permit

> *A pretreatment permit issued by the City of Vancouver (City) is required to discharge industrial wastewater, in this case, wastewater from the West boiler area and pump basin, to the City wastewater treatment plant. Appendix M of the revised engineering report dated October 15, 2015 contains two correspondences between the City and the applicant. However, there is no pretreatment permit/approval by the City included in Appendix M. Without information on wastewater characterization and expected treatment level of the oil/water separator, EFSEC is unable to verify the effluent can meet the city pretreatment standards. The engineering report may be conditionally approved pending the approval of the City to accept discharge from the facility.*

The Applicant respectfully disagrees with EFSEC's position that the pretreatment permit must be issued by the City of Vancouver (City). As you know, the City and the Applicant filed motions to Administrative Law Judge Noble requesting a ruling supporting its position that EFSEC must issue the permit. The City submitted a motion to Administrative Law Judge Noble in support of EFSEC's position[1]. The Applicant has submitted a response to the City's Motion on 28 April 2016 and expects a ruling that EFSEC, not the City, is responsible for issuing the pretreatment permit[2].

The Applicant's motion does not question the need to comply with all applicable pretreatment standards. To that end, the Applicant completed a detailed wastewater characterization for the proposed industrial wastewater discharge streams. Detailed modeling of the boiler plant was completed by DMS-Nalco and is based upon DMS-Nalco's expertise modeling, maintaining, and servicing local boiler facilities. The full wastewater characterization report is attached for reference. A summary of the results compared to the City's discharge limits are summarized in Table 1. The industrial wastewater discharges from the Facility will meet the requirements of the City's Pre-Treatment Ordinance in VMC 14.10.

The City commented in Section 14.04 of their land use and zoning consistency motion submitted to EFSEC that "the applicant has provided sufficient information to grant preliminary approval related to this standard. Final civil engineering review and approval is required." Concurrently with this letter, the Applicant is submitting the required civil plans to the City for review as part of the pretreatment and wastewater discharge approval.

In addition, the Applicant proposes the following revisions to industrial wastewater capture and handling at the Facility to further minimize discharge of pollutants into the City's sewer system.

- Pump Basin Stormwater Discharges: The pump basin located at Area 300 will be covered by a steel-framed shed roof to isolate stormwater from the pump basin. A sump and downstream containment tank will be provided to collect any washdown or drips or leaks resulting from maintenance activities. Liquid wastes collected in the tank will be hauled off by a licensed hauler for the type of liquids within the tank. The likely receiving facility for these wastes will be Safety Kleen (Clackamas, Oregon) or similar.

---

[1] In the Matter of Application No. 2013-01, Tesoro Savage LLC, Vancouver Energy Distribution Terminal, Case No. 15-001, City of Vancouver's Motion for Order Ruling that EFSEC Lacks Authority to Issue Pre-Treatment Discharge Permit, March 29, 2016.

[2] In the Matter of Application No. 2013-01, Tesoro Savage LLC, Vancouver Energy Distribution Terminal, Case No. 15-001, Vancouver Energy's Response in Opposition to the City of Vancouver's Motion for Order Ruling that EFSEC Lacks Authority to Issue Pre-Treatment Discharge Permit, 28 April 2016.

- Fire Pump Cooling Water Discharges: The fire pump cooling water discharges result from the weekly maintenance cycling (30 minutes per week for each pump) of fire pumps located in Areas 200, 300, and 400. The Applicant has conducted a wastewater characterization of the fire pump cooling water discharges (see Table 1 attached). The fire pump cooling water will be sourced directly from the City's water supply without contact with any other chemicals or constituents; therefore, the discharge will be the same as the inlet water chemistry.

  - Area 200 fire pump cooling water will be collected in the already proposed containment tank system installed in Area 200. The contents of the containment tank system will be hauled off site to a facility, such as PPV Inc., described in Item 7 below.

  - Area 300 fire pump cooling water will be collected in a 1,000-gallon permanent surge tank where it will be tested for chlorine residual and temperature prior to being released to the City sewer system. The cooling water will only be released once the chlorine residual and temperature meet City's pre-treatment ordinance discharge limits in VMC 14.10.

  - Area 400 fire pump cooling water will be collected in a 1,000-gallon permanent storage tank. The tank contents will be hauled off site once per week.

The Applicant believes that disposal to sanitary sewer is the preferred option and that a pretreatment permit can and should be issued by EFSEC. The Applicant is concerned that a City permit would be subject to a separate review and appeal process, rather than the integrated process envisioned by Ch. 80.50 RCW.

For that reason, the Applicant has investigated and confirmed two alternative means by which industrial wastewater can be disposed of without directing discharges to the City's publicly owned treatment works (POTW). These are summarized as follows.

Alternative 1: Boiler Wastewater Discharge to NPDES Outfall
This alternative would reroute the discharges from the Boiler Building (Area 600) to the proposed on-site stormwater collection system. The discharges from the boiler plant as analyzed by DMS-Nalco are suitable for discharge to the Columbia River through the existing stormwater system. Additional treatment for temperature may be required following detailed engineering design of the systems to meet the anti-degradation water quality standard within the Columbia River.

If this alternative is selected as the preferred alternative, a Tier II anti-degradation water quality standards review will be completed for the Facility to demonstrate that Facility

discharges from the Boiler Building will not result in a detectable change in water quality.

Under this alternative the fire pump cooling water discharge from Area 300 will be converted from a discharge to the City's sanitary sewer system to a collection tank and hauled off. The tank will be pumped once per week and contents hauled to PPV Inc. or similar authorized facility.

Alternative 2: Boiler Wastewater Haul Off
This alternative would capture and temporarily store on site the discharges from the Boiler Building (Area 600). The stored boiler plant discharges would be stored in an on-site steel storage tank and hauled off. It is anticipated that the haul-off option would result in an average of additional 2.5 truck trips per day during operation of the Facility. The haul and disposal would be completed by Bravo Environmental and PPV Inc. or similar. The wastewater constituents of the discharge was provided to PPV Inc. and reviewed by their in-house staff which prepared a summary of the proposed treatment process to be used for the Terminal's wastewater.

Under this alternative the fire pump cooling water discharge from Area 300 will be converted from a discharge to the City's sanitary sewer system to a collection tank and hauled off. The tank will be pumped once per week and contents hauled to PPV Inc. or similar.

The Applicant is requesting that EFSEC review and provide comments on each of these two alternatives to a POTW discharge. We are also requesting a meeting with EFSEC staff and the appropriate Ecology reviewers to discuss each of these alternatives that could be pursued in the event that the Applicant's motion is denied.

The following table summarizes the key constituents identified in the City's local pre-treatment ordinance in VMC 14.10.080, Table 14.10.080-1. As shown in the table below, the wastewater discharge from Area 600 meets all of the performance specifications of the City's pre-treatment ordinance.

Table 1. Wastewater Discharges Compared with City's Pre-treatment Limits

Key Water Constituents	Pre-Treatment Limit Specifications	Area 600 Boiler Building	Fire Pump Cooling
	Final Wastewater Discharge	Final Wastewater Discharge	Final Wastewater Discharge
Ag (mg/L)	1.13	ND	ND
As(mg/L)	0.22	ND	ND
Cd(mg/L)	0.14	ND	ND

Key Water Constituents	Pre-Treatment Limit Specifications	Area 600 Boiler Building	Fire Pump Cooling
	Final Wastewater Discharge	Final Wastewater Discharge	Final Wastewater Discharge
Cr(mg/L)	7.22	ND	ND
Cu(mg/L)	3.67	ND	ND
Hg(mg/L)	0.008	ND	ND
Mo(mg/L)	0.42	ND	ND
Ni(mg/L)	0.90	ND	ND
Pb(mg/L)	0.44	ND	ND
Se(mg/L)	0.31	ND	ND
Tl(mg/L)	0.53	ND	ND
Zn(mg/L)	1.64	0.062	0.02
CN(mg/L)	0.47	NT	ND
BOD5 (mg/L)	500	6.43	NT
FOG(mg/L)	50	7.7	NT
pH (SU)	5.5-10	8.4	7.7
Temp (degrees F)	104	75.8	70.0

Notes: ND – Not Detected, NT – Not Tested

The Applicant completed a detailed wastewater characterization for the proposed industrial wastewater discharge streams. Detailed modeling of the boiler plant was completed by DMS-Nalco and is based upon DMS-Nalco's expertise in modeling, maintaining, and servicing local boiler facilities. The full wastewater characterization report is attached for reference. Detailed wastewater characterization for the two industrial wastewater sources (boiler plant wastewater and fire pump cooling water) is summarized above in Table 1 and compared with the City's pretreatment discharge limits.

2. Area 200 Unloading and Office (Subsection 1.4.2.1)

> *This section states "Boiler blowdown (process wastewater) from Area 600 will be pumped to this area for on-site oil-water separation and discharge to the sewer." However in section 1.4.2.5, it states "boiler blowdown will be temperature treated using a heat exchanger and chemical neutralization if needed… A downstream oil-water separator is also included in the design prior to discharge. Process wastewater from this area is discharged to the gravity sewer described in Area 200 above." Section 8.3.2 states "Blowdown temperature at the boiler plant would be lowered to permit allowable levels with a cooling system that uses potable water as the coolant. Coolant water would be mixed along with boiler blowdown." Please clarify which*

> *type of treatment will be employed to treat boiler blowdown prior to discharging to the city sanitary sewer system.*

The Applicant will correct the statement in Sections 1.4.2.1, 1.4.2.5, and 8.3.2 for consistency. The following describes how the Applicant will treat and discharge boiler blowdown.

Boiler plant discharges from Area 600 will not require treatment to meet discharge requirements for the City's pretreatment ordinance with the exception of possible chemical neutralization for pH, and temperature. If pH adjustment is necessary, treatment will be provided by an automatic treatment system supplied by the boiler manufacturer. The Applicant has revised its design regarding cooling of the boiler blowdown. Rather than diluting with water to achieve the required temperature as previously described in subsection 1.4.2.1 in the October 2015 Engineering Report, and in order to further minimize water consumption and volumes of wastewater discharge, a non-contact tube and shell heat exchanger will be used to cool the discharge temperature to a maximum of 104 degrees Fahrenheit. Potable raw water will not be mixed with the boiler blowdown as coolant.

The treated and cooled boiler plant discharges will be pumped to the on-site gravity sewer installed within Area 200; it will not be comingled with water discharged to sanitary sewer from Area 600.[3] Discharges from Area 200 will be routed through an on-site oil-water separator prior to discharge to the City's sanitary sewer.

To clarify, the oil-water separator that is proposed in Area 200 on the sewer discharge from the Area 600 Boiler Building is included as part of the Facility's operations spill prevention control and countermeasure plan (SPCCP) and is unrelated to treatment of boiler plant discharges.

3. Administration and Support Buildings (Subsection 5.2.2.1)

> *The report states there are two double wall containment tanks located to the southeast of the easternmost administration/support building. The report also states those tanks will be operated such that 825 bbl of capacity is reserved to contain an entire railcar (plus 10 percent). However, there is no discussion on the impact to the tank capacity caused by the additional rail car wash water since the rail car washing water flow was not addressed in the previous report. Without the information, Ecology is unable to verify the tanks have sufficient capacity to store wastewater from the unloading building and contain spills in the building as required.*

The volumes of wash water and wastewater generated by washing the exteriors of rail cars were accounted for in the 2013 Application for Site Certification and subsequent engineering

[3] See response to Item 1 above regarding the haul-off alternative that has also been identified.

and permitting documents as part of the "miscellaneous part/equipment wash." The containment tanks will have a cumulative capacity of 1,500 bbl or 63,000 gallons.

The secondary containment collection system including piping from the rail containment pans, and surge tanks include a total capacity of 2,900 gallons (approximately 69 bbls). The trenches between the rail unloading stations located with the Area 200 rail unloading area have capacity to contain 33,400 bbls. The total hydraulic containment and collection system within Area 200 totals 34,969 bbls.

The three sources of wastewater contributing to the containment tanks at Area 200 are the miscellaneous part/equipment wash water (includes occasional rail car exterior washing), Area 200 fire pump cooling water and the condensate discharge for haul off. The total volumes of wastewater from these two sources are expected to range between 7,548 gpd (179 bbl/day) and a maximum of 10,852 gpd (258 bbl/day).

4. Rail Car Washing (Subsection 6.1.6.1)

> *The revised report (page 44) states frequency of railcar exterior washing is one railcar per month based on experience of the applicant at facilities receiving one unit train per day. Assuming each unit train contains 120 railcars, the terminal will receive oil from 3,600 railcars per month and only one of 3600 railcars requires pressure washing. Please provide the source of the operational data and how much water is required to pressure wash each railcar. The report states process wastewater including railcar wash water and other wastewater sources in the unloading facility is discharged to two containment tanks located at the admin/support area of Area 200. Content of those tanks will be hauled off site and disposed of by a licensed hauling and disposal company at an appropriate location. Please identify the receiving facility, treatment process employed and ultimate disposal point(s) of all wastewater generated at the facility that is disposed of offsite.*

The frequency of washing is based upon the Applicant's experience operating similar loading and unloading facilities[4]. The Facility is being permitted to receive an average of four unit trains per day, which would, therefore, equate to approximately four railcars per month that would require exterior washing. The average railcar washing activities include wiping any visible oil on the outside of the railcar with a cleaner (Simple Green or similar) and a rag. When washing is necessary, a 5-gallon-per-minute pressure washer is used to help remove any residual oils. This washdown is usually less than 15 minutes per railcar. Therefore, volumes contributed from railcar washing are expected to be less than 300 gallons per month.

[4] Personal communication with Jared Larrabee and David Corpron.

The majority of the miscellaneous equipment/parts wash water is used for cleaning fittings and facility washdown. To estimate the total liquid haul off, volumes from a similar facility were reviewed. Based upon the design of the similar facility that sheds rainwater such that it is included with the haul-off volumes; the maximum estimated haul off volume from the unloading building for miscellaneous parts wash, facility washdown, and railcar exterior washing for the Facility will be approximately 1,000 gallons per day (gpd) and a maximum of 2,000 gpd.

As discussed above, the Applicant has not signed a contract for hauling off, disposing of, or recycling the contents of the containment tanks, but as indicated in this letter has identified companies which will be able to accept these discharges.

5. Northern pipeline, Terminal 4 stormwater system (Subsection 1.4.1.1)

> *The report states that the northern pipeline currently discharging stormwater to the Terminal 4 water quality pond will be re-routed to bypass the water quality pond and reconnect to the Port existing stormwater outfall to the Columbia River. The project is ongoing and will occur prior to the construction of the facility. Will the pipeline re-routing project proceed as planned since Farwest Steel is closed at this point?*

The bypass project described in the Engineering Report to reroute stormwater from Farwest Steel and Area 300 of the Facility has been constructed by the Port of Vancouver USA and is operational. As a result, the stormwater from Farwest Steel and Area 300 commingles with other stormwater after the Terminal 4 pond outlet. All of the commingled stormwater is then conveyed to the Terminal 4 outfall.

6. Anti-degradation Policy

> *Tier II is used to ensure that receiving waters of a higher quality than the criteria assigned in the standards are not degraded unless such lowering of water quality is necessary and in the overriding public interest. Tier II applies only to new or expanded sources of pollution from specific types of activities directly regulated by Ecology (e.g., NPDES, 401, 404, Forest Practices). Any new or expanding dischargers that would cause a measurable degradation of water quality:*
>
> *a. Must go through a technology review to identify and apply any feasible alternatives to that degradation.*
> *b. Must show that overriding public benefits would occur from allowing the lowering of water quality.*

> *A tier II analysis should be included in the NPDES Engineering Report. For reference please see WAC 173-201A-320 and Ecology guidance: (http://fortres.wa.gov/ecy/publications/SummaryPages/1110073.html) for more information.*

The Applicant is currently completing an analysis to demonstrate that discharges from the proposed Facility will not result in a measurable change in water quality outside the source area after allowing for mixing consistent with WAC 173-201A-400(7). The analysis will be completed in accordance with WAC 173-201A-320. The Applicant will complete the study and will submit the results to EFSEC at that time.

7. Area 200 Miscellaneous Part/Equipment Wash (Subsection 8.3.1)

> *This section describes wastewater sources in Area 200 including rail car and part/equipment washing, rainwater either dripping from the rail cars or blown in from the side, and accidental release of oil or fire retardant during oil transfers or system maintenance. Wash water will be collected and conveyed to the containment tanks for hauling off site by trucks to an approved facility for recycling or disposal. Wastewater collected at collection/containment trenches will be pumped to the unloading facility containment tanks and hauled off site by truck to a licensed and approved disposal facility. Please provide wastewater characterization, the treatment process employed and the ultimate point(s) for all wastewater generated at Area 200.*

The Applicant assumes that the reviewer means "ultimate point(s) of discharge for all waste waters generated in Area 200." Wastewater sources within the rail unloading building will be comingled, collected, and hauled off as discussed above. Collection of each stream is from the rail drip pans and floor drains within the rail unloading facility. Detailed characterization is only available for the steam condensate blowdown and is provided in the attached DMS-Nalco report. The remaining contributing streams are summarized with the components and expectations of those waste streams.

- Steam Condensate Blowdown. A full characterization of the steam condensate was developed by DMS-Nalco and is included in their attached report.
- Drips/leaks from railcars: Oily water with brake dust
- Windblown rain: Rainwater
- Railcar exterior washdown: Oily water, brake dust, suspended solids (dust), cleaner (Simple Green or similar)

- Parts wash: Oily water, cleaner (Simple Green or similar)
- Facility washdown: suspended solids (dust)

All of these sources of wastewater collected at the unloading facility will be pumped to the Area 200 containment tanks located at the Admin/Support Buildings and hauled off. It is anticipated that this haul off could occur daily depending upon actual wastewater production volumes.

There will be no on-site treatment for wastewaters collected at the unloading facility. Wastewaters during normal operations will be hauled by Bravo Environmental (or similar properly licensed industrial wastewater hauler) to PPV Inc. (or similar) for treatment, recycling, and discharge. PPV Inc. was preliminarily selected due to their treatment capabilities. Wastewaters from the Facility will be deposited upon arrival into a settling basin in the facility where the contents will be tested in their in-house lab to determine appropriate treatment. Following testing, the contents of the wastewater will most likely pass through advanced oil-water separator, settling basins, and possibly filtration prior to discharge. PPV Inc. developed a treatability plan (attached for your reference) confirming their ability to treat the range of wastewaters being hauled off from the Facility.

8. Area 600 Boiler Effluent (Subsection 8.3.2)

> *The boiler effluent discharges listed includes condensate discharge of 12,425 gpd to haul off. Please include characterization of the condensate and identify the receiving facility, treatment process employed and the ultimate disposal point of the wastewater. West Boiler (Subsection 17.2) states process wastewater including condensate blowdown and cooling water will be treated on site and discharged to sanitary sewer. Please specify how the condensate will be disposed of (offsite disposal or to the sanitary sewer).* ***Please ensure that the treatment process employed for each wastewater stream is consistent throughout the engineering report.***

During peak operating normal conditions (maximum water use and maximum sewer discharge), the boiler units operate with a 4 percent boiler blowdown rate and a 25 percent condensate loss. Under the maximum operating scenario with two boilers operating, the steam production is estimated to be 83,830 pounds per hour (pph) with a condensate return of 67,064 pph. The following chart indicates the resulting water balance for the boiler at these rates.

• Raw water (intake)	85,305 gpd
• Sanitary sewer discharge (boiler blowdown)	22,464 gpd
• Atmospheric loss	38,848 gpd
• Steam condensate blowdown (haul off)	7,952 gpd

The boiler blowdown, which includes condensate return, is treated for pH as needed and by a non-contact tube and shell heat exchanger to reduce temperature; then the blowdown is combined with the Reverse Osmosis (RO) wastewater and miscellaneous maintenance drain water within the boiler plant and pumped to the gravity sewer installed on site at Area 200, passes through an oil-water separator, and is discharged to the sanitary sewer.

Steam condensate blowdown is generated during the unloading of tank cars in Area 200. Within the rail unloading building as part of operating this system, during the connection and disconnection of the railcar steam coils, the operator opens the steam line valves and discharges steam directly to the rail drip pans. This procedure is an operational necessity, as it purges the lines of debris. This results in the discharge of steam condensate blowdown. The steam condensate blowdown is collected in the Area 200 drip pans, which discharge to the Area 200 containment tanks along with other wastewater streams as described in item 7 above. The contents of these containment tanks will be hauled offsite.

In accordance with the SPCC regulations in 40 CFR 112.8, the rail unloading facility includes a containment system designed to capture and store a minimum of 110 percent of the contents of a rail car. This system has been oversized so that all operational wastewaters generated within the rail unloading building can be collected and stored for haul off if necessary. These wastewaters include steam condensate blowdown and wastewaters resulting from the miscellaneous equipment wash (includes occasional railcar exterior washing).

The Applicant has not signed a contract for services that include hauling off and disposing of or recycling the contents of the Area 200 containment tanks. Vendors will be selected who are licensed appropriately by the Department of Transportation to haul non-hazardous waste liquids and whose receiving facilities are specially designed, permitted, and operated to provide pretreatment for non-hazardous industrial wastes. Examples would include Bravo Environmental and PPV, Inc.

A detailed characterization of the wastewaters were provided to PPV, Inc. and a description of the proposed treatment system was prepared by their in-house staff. Based upon the characterization and range of wastes expected, PPV confirmed that they can receive the wastes expected from the Facility.

9. Fire Pump Cooling Water (Subsection 8.3.4)

> *States that fire pump cooling water from different Areas 200, 300, and 400 is being discharged to the containment tank, sanitary sewer and stormwater system. However there is no information regarding the characteristics of fire pump cooling water. Please provide the information for review.*

Table 1 above provides a characterization for the non-contact fire pump cooling water. Please note that, as stated in the Engineering Report, during normal operations the fire pumps are operated for only 30 minutes once each week.

10. C.2 Process Schematic for Wastewater Discharges

> *The diagram shows there is a boiler building in Area 300 and two product tanks are heated with steam. However it does not match with the wastewater collection/treatment system for Area 300 as provided in the engineering report. Please revise the diagram as appropriate.*

C.2 Process Schematic was provided in the Engineering Report as an attachment of the state wastewater discharge permit, which was included in the original 2013 Application for Site Certification. We have attached the most recent process schematic for wastewater discharges.

Please contact me at 206/431-2373 or at irina.makarow@abam.com, if you have any questions about this submittal. We look forward to further coordination with you, your staff, and EFSEC's consultants.

Sincerely,

Irina Makarow
Senior Environmental Project Manager

IM:DRS:nb
Attachments
Wastewater Characterization Report
PPV Inc. Treatability Plan
Schematics for Wastewater Discharges Process

cc w/attach: Kelly Flint, Savage Companies
Jay Derr, Van Ness Feldman

Water Treatment System Review

Report

23 May 2016

BergerABAM

Port of Vancouver/Vancouver, WA

Mr. Dan Shafar

DMS Main Office:
358 US Route One
Falmouth, ME 04105

Charles Bailey
(+1 207) 274-9712
cwbailey@nalco.com

Kenn Cygan
(+1 207) 8318115
kcygan@nalco.com

Stan Jenkins
(+44) 0-7736-354-111
sjenkins1x@nalco.com

April Yi
(+1 513) 225-3046
ayyyi@nalco.com

TABLE OF CONTENTS

Confidentiality Statement 2
Section I: Executive Summary 3
Results Summary 3
Water Characteristics 4
Initial Design with Reverse Osmosis/Sodium Zeolite Process 4
Section II: Abstract 4
Key Goals 4
Section III: Project Description 5
Operating Criteria 5
Cleaver-Brooks Chemistry Specifications 5
Water Sources 6
Methodology 10
Section IV: Evaluation 11
Modeling Observations 11
Water Inventory 11
Scenario Description 12
Scenario Evaluation 13
SCN_002 PROPOSED SCENARIO 13
Section V: Conclusions 15
Proposed Operations 15
Results Summary 15
Appendix A: City Water Analysis 16
Appendix B: Water Balance Diagrams 18
Appendix C: Analytical Detection Limits 19
Appendix D: Chemistry 20

©2016 Ecolab USA Inc. All Rights Reserved

CONFIDENTIALITY STATEMENT

This report contains information relating to the operations at the proposed west boiler house for the Port of Vancouver, Vancouver, WA. This information is confidential to each party, and as such this report should not be shared without the express written consent of all the parties involved.

Trade Marks

Ecolab, Nalco Water, Data Mobility Systems and the logos are trademarks of Ecolab USA Inc.

All other trademarks are the property of their respective owners.

CONFIDENTIALITY NOTICE: This document is intended solely for the use of the individual or entity to whom they are addressed and may contain confidential and privileged information protected by law. If you received this document in error, any review, use, dissemination, distribution, or copying of the document is strictly prohibited.

DISCLAIMER: Actual values may be different pending actual conditions. We make no warranty of any kind regarding the accuracy or sufficiency of the information contained herein due to various assumptions including proposed plant configuration and anticipated operating requirements as provided.

©2016 Ecolab USA Inc. All Rights Reserved

SECTION I: EXECUTIVE SUMMARY

Tesoro and Savage have formed a joint venture to build and operate the Vancouver Energy terminal. The proposed facility will receive and ship crude oil that originates in the midcontinent of North America and arrives at the Port of Vancouver USA by rail. The crude oil will be temporarily and safely stored in secure tanks, then transferred to customers' vessels to be shipped to West Coast oil refineries, and converted into transportation fuels and other products for U.S. consumption.

BergerABAM is providing consulting services to Tesoro and Savage on the feasibility of constructing this facility. As part of this project, BergerABAM need to obtain an environmental permit from either the state or city authorities, but require more detailed information on the expected discharge characteristics from the new facility.

Nalco has been requested to supply expertise to support the development of the project. Nalco has been requested to develop the waste water characteristics for a scenario based the following specific operating criteria.

1. **Scenarios:** The following scenario was evaluated.
    a. Average water flows based on two Cleaver Brook boilers running (SCN_000)
    b. City water feeding the boilers treated with a reverse osmosis (RO) unit followed by an off-site regenerated sodium zeolite softener (SCN_002)

RESULTS SUMMARY

- The design & operating parameters result in boiler feed water that meets all the Cleaver Brooks boiler water chemistry specifications.

- The design & operating parameters result in waste water that meets all the chemistry limits for waste water discharge.

©2016 Ecolab USA Inc. All Rights Reserved

WATER CHARACTERISTICS

INITIAL DESIGN WITH REVERSE OSMOSIS/SODIUM ZEOLITE PROCESS

1. Water flow characteristics
    a. Boiler blowdown details can be seen in Table 2 and chemistry Appendix C
        i. Cleaver Brooks specifications are met
        ii. Sulfite levels are present in the blowdown
        iii. Phosphate is present in the blowdown from city water PO_4
    b. Total waste water details can be seen in Table 3 and Table 4 and chemistry Appendix C

SECTION II: ABSTRACT

This engineering study included gathering of information on the conceptual design and extensive use of a proprietary modeling software program that replicates specified expected operating conditions of the facility. This involved computer based holistic modeling of the plant water and process systems.

KEY GOALS

1. Establish reliable water balance for the conceptual design and specified operating parameters
    a. Hydraulic flows
    b. Ionic chemistry
2. Determine the water characteristics of the following flows
    a. Boiler blowdown
    b. Total waste water
    c. Boiler feedwater
    d. Boiler cycle make up
    e. Steam condensate

©2016 Ecolab USA Inc. All Rights Reserved

SECTION III: PROJECT DESCRIPTION

OPERATING CRITERIA

Port of Vancouver, WA		
Scenario_000		
Operational Parameters		
Number of Boilers	3	
Rated Boiler Capacity each	51,750	pph
Boiler Operating	2	
Boilers on Standby	1	
Operating Pressure	125	psig
Steam Production Total	83,830	pph
Condensate Return	67,064	pph
Blowdown %	4.0%	

CLEAVER-BROOKS CHEMISTRY SPECIFICATIONS

TOTAL HARDNESS	1 PPM MAXIMUM
TOTAL ALKALINITY	600 PPM MAXIMUM
TOTAL SILICA	150 PPM MAXIMUM
IRON CONTENT	0.1 PPM MAXIMUM
PH	8.5 – 10.5
TOTAL DISSOLVED SOLIDS	2,200 TO 2,500 PPM
OXYGEN CONTENT	0 PPM
CARBON DIOXIDE	0 PPM

(SOURCE: CLEAVER-BROOKS, INC.)

©2016 Ecolab USA Inc. All Rights Reserved

WATER SOURCES

The water chemistry of the city water source (during the sampling week February 11, 2016) can be classified as slightly hard water with moderate alkalinity concentration. The hardness is primarily temporary hardness which implies lime softening can be effective in reducing hardness, alkalinity, TDS and silica as well. The reactive silica level is very high and is of concern in managing the boiler water chemistry within the OEM's water specifications.

Table 1 summarizes these critical chemistry parameters that drive water processes required to manage the water consumption and waste water discharge volume.

Table 1 City Water Chemistry

KEY WATER CONSTITUENTS	City Water
ALL UNITS IN mg/L (unless otherwise specified)	SCN_000
Ca	33.0000
K	3.3000
Li	ND
Mg	9.7000
Na	6.4000
Sr	0.1220
Zn	0.0200
Cl	6.9000
HCO3	131.4833
NO3	15.0000
PO4	0.3679
SO4	10.0000
pH su	7.7000
SiO2	48.0000

City water chemistry based on sample taken of Vancouver city water at the Nalco manufacturing plant in Vancouver, WA. The sample was analyzed through ICP for metals and IC for anions. Alkalinity was tested with auto-titration and pH with standard lab bench pH meter.

ICP: Inductively Coupled Plasma Spectroscopy

IC: Ion chromatography

See Appendix C for detection limits

©2016 Ecolab USA Inc. All Rights Reserved

Table 2: Boiler Blowdown Chemistry

KEY WATER CONSTITUENTS	Boiler BD
ALL UNITS IN mg/L (unless otherwise specified)	SCN_002
Ca	ND
K	1.0205
Mg	ND
Na	99.2036
Zn	0.0062
Cl	2.1339
HCO3	17.7951
NO3	4.6389
OH	NC
PO4	0.1138
SO3	112.5702
SO4	3.8133
Conductivity µS/cm	339.8661
pH su	10.3037
SiO2	15.3267
TDS	271.8929
Temperature °F	95.0000

Note: Elements and compounds that are not listed were either not tested (NT) or below analytical procedure detection limit (ND). There are also other values that are not applicable (NA) to this process or are calculated values that cannot be calculated (NC) on this water chemistry. A complete list can be found in Appendix D

©2016 Ecolab USA Inc. All Rights Reserved

Table 4 Drain Sump Chemistry & Specification

KEY WATER CONSTITUENTS	Final Waste
ALL UNITS IN mg/L (unless otherwise specified)	SCN_002
Ag	ND
As	ND
Ca	100.8204
Cd	ND
Cr	ND
Cu	ND
Hg	ND
K	10.1931
Mg	29.6351
Mo	ND
Na	32.0165
Ni	ND
Pb	ND
Se	ND
Tl	ND
Zn	0.0618
Cl	21.3128
CN	ND
HCO3	400.3494
NO3	47.1287
OH	ND
PO4	1.1365
SO3	12.2498
SO4	37.9369
BOD5	6.4283
Conductivity µS/cm	869.5330
FOG	7.7139
pH su	8.4188
SiO2	148.3151
TDS	695.6264
Temperature °F	75.7740

All values in mg/L unless other wise specified

©2016 Ecolab USA Inc. All Rights Reserved

Table 4 Drain Sump Chemistry & City of Vancouver Discharge Limit

KEY WATER CONSTITUENTS	City of Vancouver Discharge Limit	SCN_002
ALL UNITS IN mg/L (unless otherwise specified)	Final Waste Water Discharge	Final Waste Water Discharge
Ag	1.130000	ND
As	0.220000	ND
Cd	0.140000	ND
Cr	7.220000	ND
Cu	3.670000	ND
Hg	0.008000	ND
Mo	0.420000	ND
Ni	0.900000	ND
Pb	0.440000	ND
Se	0.310000	ND
Tl	0.530000	ND
Zn	1.640000	0.061776
CN	0.470000	NT
BOD5	500.000000	6.428280
FOG	50.000000	7.713936
pH su	10.000000	8.418850
Temperature °F	104.000000	75.774029

<u>All values meet waste specification base.</u>

Chromium value is for total Cr (Cr^{+3} and Cr^{+6}).
A nominal amount of BOD and FOG was added to the sanitary waste flow. Also additional amount to FOG was added to the condensate that is delivered to the floor drains.

©2016 Ecolab USA Inc. All Rights Reserved

METHODOLOGY

DMS was supplied with the original design diagrams, expected operating parameters and water chemistry analyses from Nalco. DMS then developed a line diagram model of the water balance using Visio and the proprietary DMS-Water™ software system to replicate the proposed operating conditions of the facility.

DMS evaluated the proposed plant configurations regarding water chemistry based on operations feedback and our intimate knowledge of practical industrial water treatment as it pertains to steam plant process operations. The results of these studies were captured in this report.

The scope of the work can be found in Appendix A.

Disclaimer:

The enclosed information is based on an average chemistry for the city water source. DMS-Water™ modeling was matched to a snapshot of chemistry data that indicates that our modeling sufficiently represents the water balance and system. Conditions such as incursion of air borne debris into the cooling tower and plant operational changes can cause actual conditions to differ from our modeling. While actual chemistry conditions and chemical costs most likely will differ from our modeling, the implied improvements and actual costs should be reflected with actual operations.

©2016 Ecolab USA Inc. All Rights Reserved

SECTION IV: EVALUATION

MODELING OBSERVATIONS

- Boiler blowdown chemistry complies with both ASME and Cleaver-Brooks silica, alkalinity and pH specifications
- Waste water chemistry and flow complies with expected discharge permits.

WATER INVENTORY

Table 4 Incoming Water Inventory

Water In (gpm)	SCN_002
City Water	
• City Water to Plant	48.1
Subtotal	48.1
Total Water In	48.1

Table 5 Outgoing Water Inventory

Water Out (gpm)	SCN_002
Evaporation	
• Misc. condensate loss 1	9.1
• Misc. condensate loss 2	17.9
Subtotal	27.0
Final Discharge	
• Final Discharge	15.6
Subtotal	15.6
Tank-Waste Manual	
• Rail car condensate losses	5.5
Subtotal	5.5
Total Water Out	48.1

©2016 Ecolab USA Inc. All Rights Reserved

SCENARIO DESCRIPTION

DMS investigated five (5) alternative designs to address the goals of this engineering study, and following discussion with BergerABAM chose SCN_002 as the design that best meets the objectives of this project.

1. Determine the water characteristics
    a. Boiler blowdown
    b. Total waste water
    c. Boiler feedwater
    d. Boiler cycle makeup
    e. Steam condensate
2. Meet the water specifications for boiler water and waste water discharge.

.

©2016 Ecolab USA Inc. All Rights Reserved

SCENARIO EVALUATION

SCN_002 PROPOSED SCENARIO

This is the Base Case of the new facility for the proposed west boiler house. It utilizes the design and operating conditions agreed between Nalco and BergerABAM.

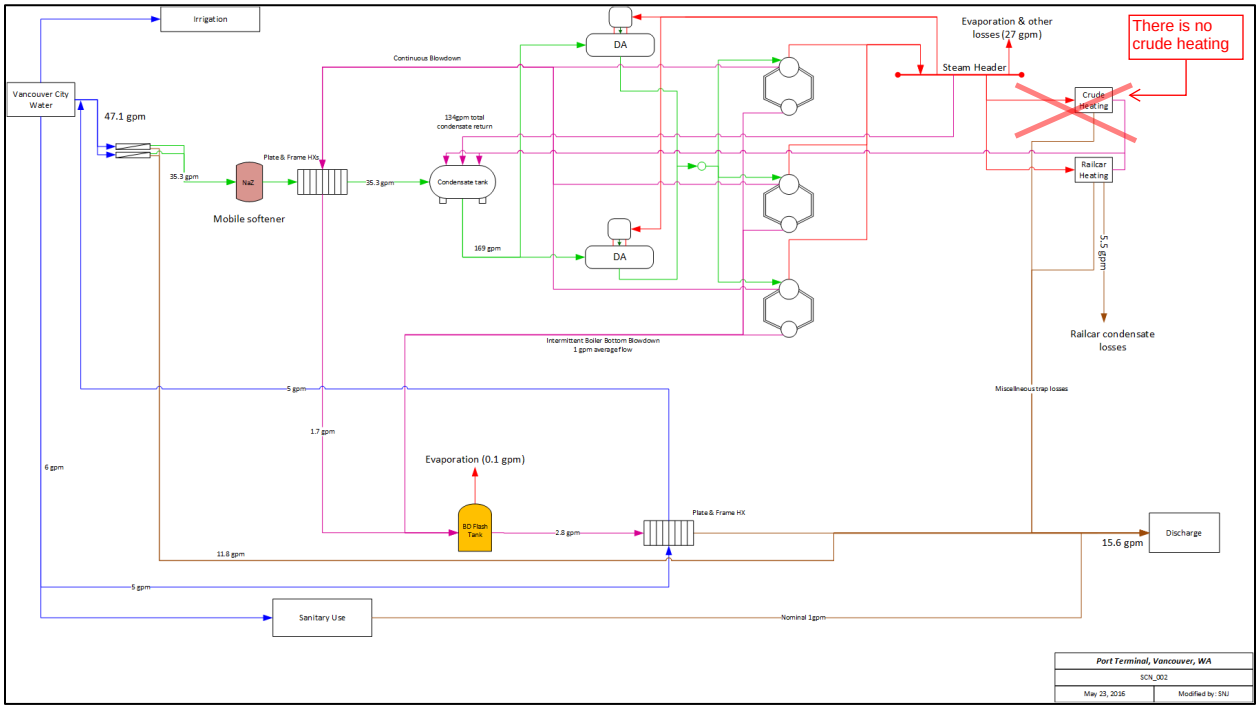

Summary: The incoming city water is treated with a reverse osmosis unit followed by an off-site regenerated (mobile) sodium zeolite softener. Blowdown water from the boilers is cooled by two plate and frame heat exchangers, both using water that will ultimately feed the boilers. The first heat exchanger cools the blowdown with softened water that feeds the deaerator. The second heat exchanger uses fresh city water prior to feeding the reverse osmosis unit.

Results: This case established that the boiler chemistry meets both ASME and Cleaver-Brooks boiler water chemistry specification for silica, pH and other ion concentrations. The boiler blowdown chemistry contains sulfite and phosphate. The sulfite is the results of boiler water oxygen scavenger use and the phosphate is the results of phosphate in the city water make up.

©2016 Ecolab USA Inc. All Rights Reserved

Table 6 SCN_002 Boiler Blowdown Chemistry

KEY WATER CONSTITUENTS	SCN_002	
ALL UNITS IN mg/L (unless otherwise specified)	Boiler BD	Boiler BD Specification
Ca	0.0000	1.0
K	1.0205	
Mg	0.0000	
Na	99.2036	
Zn	0.0062	
Cl	2.1339	
HCO3	17.7951	
NO3	4.6389	
OH	0.0000	
PO4	0.1138	
SO3	112.5702	
SO4	3.8133	
Conductivity µS/cm	339.8661	
pH su	10.3037	8.5-10.5
SiO2	15.3267	150
TDS	271.8929	2,200
Temperature °F	95.0000	

©2016 Ecolab USA Inc. All Rights Reserved

SECTION V: CONCLUSIONS

PROPOSED OPERATIONS

Scenario: The following scenario was evaluated.

a. Average water flows based on two Cleaver Brook boilers running
b. City water feeding the boilers treated with a reverse osmosis (RO) unit followed by an off-site regenerated sodium zeolite softener.

RESULTS SUMMARY

- The design & operating parameters result in boiler feed water that meets all the Cleaver Brooks boiler water chemistry specifications.

- The design & operating parameters result in waste water that meets all the chemistry limits for waste water discharge.

- Detailed chemistry for all key water flows can be found in Appendix C.

©2016 Ecolab USA Inc. All Rights Reserved

APPENDIX A: CITY WATER ANALYSIS

Customer Analytical Services
1601 West Diehl Road Naperville IL60563-1198
Phone: 630-305-1000 Fax: 630-305-2921 Email: customeranalyticalservices@nalco.com

NALCO
An Ecolab Company

Final - Report Number: 1664169
VANCOUVER PLANT - 8510 FRUIT VALLEY RD - VANCOUVER - WA - USA
Representative: PETER KANDA

Sample Number	NW190302
Date Sampled	11-Feb-2016 14:00
Date Received	12-Feb-2016
Date Completed	17-Feb-2016
Date Authorized	17-Feb-2016

Water Analysis

This sample was analyzed as received, the results being as follows.

Sampling point: Vancouver City Water

Water

Acid Extractable Metals **Test Method: CW14024**	**Filtered**	**Total**
Aluminum (Al)	<0.03 mg/L	<0.03 mg/L
Barium (Ba)	0.009 mg/L	0.009 mg/L
Boron (B)	<0.02 mg/L	<0.02 mg/L
Cadmium (Cd)	<0.005 mg/L	<0.005 mg/L
Calcium (Ca)	33 mg/L	33 mg/L
Calcium (CaCO3)	82 mg/L	83 mg/L
Chromium (Cr)	<0.015 mg/L	<0.015 mg/L
Copper (Cu)	<0.03 mg/L	0.03 mg/L
Iron (Fe)	<0.02 mg/L	<0.02 mg/L
Lead (Pb)	<0.10 mg/L	<0.10 mg/L
Lithium (Li)	<0.005 mg/L	<0.005 mg/L
Magnesium (Mg)	9.7 mg/L	9.7 mg/L
Magnesium (CaCO3)	40 mg/L	40 mg/L
Manganese (Mn)	<0.005 mg/L	<0.005 mg/L
Molybdenum (Mo)	<0.04 mg/L	<0.04 mg/L
Nickel (Ni)	<0.01 mg/L	<0.01 mg/L
Phosphorus (P)	0.12 mg/L	0.12 mg/L
Potassium (K)	3.3 mg/L	3.3 mg/L
Silicon (Si)	22 mg/L	23 mg/L
Silica (SiO2)	48 mg/L	48 mg/L
Sodium (Na)	6.4 mg/L	6.4 mg/L
Sodium (CaCO3)	14 mg/L	14 mg/L
Strontium (Sr)	0.122 mg/L	0.123 mg/L
Vanadium (V)	<0.01 mg/L	<0.01 mg/L
Zinc (Zn)	0.02 mg/L	0.02 mg/L
Total Hardness (CaCO3)	120 mg/L	120 mg/L

COMPANY WITH QUALITY SYSTEM CERTIFIED BY DNV
= ISO 9001:2008 =

Authorized by Kimberly Jackson
Principal Chemist

Page 1 of 2

©2016 Ecolab USA Inc. All Rights Reserved

Customer Analytical Services
1601 West Diehl Road Naperville IL60563-1198
Phone: 630-305-1000 Fax: 630-305-2821 Email: customeranalyticalservices@nalco.com

NALCO
An Ecolab Company

Final Report Number: 1664169
VANCOUVER PLANT - 8510 FRUIT VALLEY RD - VANCOUVER - WA - USA
Representative: PETER KANDA

Sample Number	NW100302
Date Sampled	11-Feb-2016 14:00
Date Received	12-Feb-2016
Date Completed	17-Feb-2016
Date Authorized	17-Feb-2016

Water Analysis

This sample was analyzed as received, the results being as follows:

Sampling point: Vancouver City Water

Anions **Test Method: CW15000**	**Filtered**
Chloride (Cl)	6.9 mg/L
Nitrite (NO2)	<0.20 mg/L
Bromide (Br)	<0.20 mg/L
Nitrate (NO3)	15 mg/L
Sulfate (SO4)	10 mg/L
Chloride (CaCO3)	9.7 mg/L
Nitrate (CaCO3)	12 mg/L
Sulfate (CaCO3)	11 mg/L

Alkalinity **Test Method: CW11059**	**Total**
Total Alkalinity (CaCO3)	120 mg/L
Phenolphthalein Alkalinity (CaCO3)	<10 mg/L
Bicarbonate (CaCO3)	120 mg/L

Other Analytes	**Test Method**	**Total**
Conductivity at 25°C	CW11063	290 µS/cm
pH @ 25°C	CW11059	7.7 pH Units

COMPANY WITH
QUALITY SYSTEM
CERTIFIED BY DNV
= ISO 9001:2008 =

Authorized by Kimberly Jackson
Principal Chemist

Page 2 of 2

©2016 Ecolab USA Inc. All Rights Reserved

APPENDIX B: WATER BALANCE DIAGRAMS

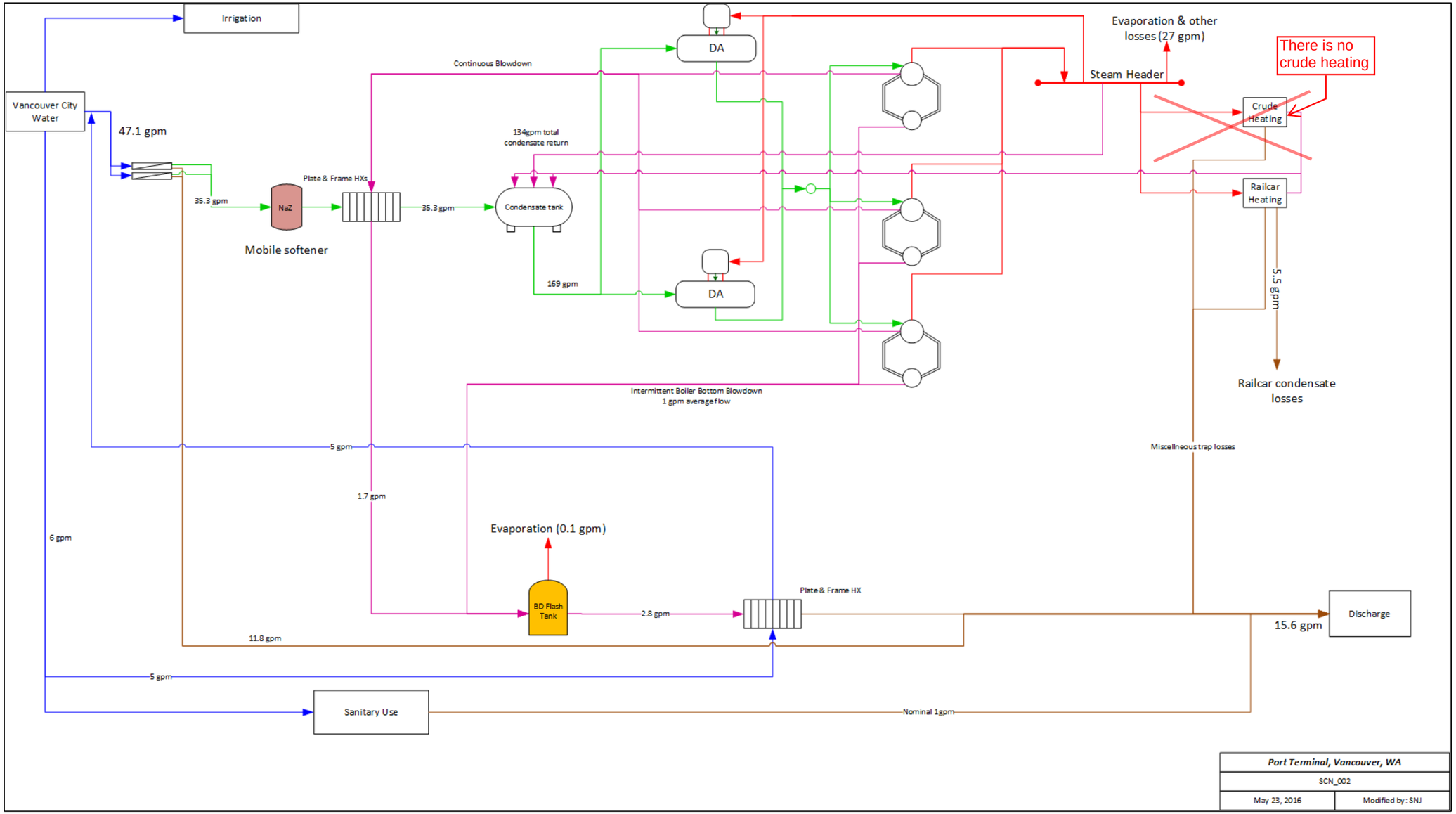

©2016 Ecolab USA Inc. All Rights Reserved

APPENDIX C: ANALYTICAL DETECTION LIMITS

Test Code Provides the following analyses(mg/l) for Total and Soluble cations and anions:
(Cations by ICP; Anions by IC)
(Alkalinity values by auto-titration)

	Reportable Limits mg/l *		Reportable Limits mg/l *
Aluminum (Al)	0.03	Chloride (Cl)	0.1
Barium (Ba)	0.005	Nitrite (NO2)	0.2
Boron (B)		Bromide (Br)	0.2
Cadmium (Cd)	0.005	Nitrate (NO3)	0.2
Calcium (Ca)	0.05	Sulfate (SO4)	0.2
Calcium (CaCO3)		Chloride (CaCO3)	
Chromium (Cr)	0.015	Nitrate (CaCO3)	
Copper (Cu)	0.03	Sulfate (CaCO3)	
Iron (Fe)	0.02		
Lead (Pb)	0.11	Total Alkalinity (CaCO3)	10
Lithium (Li)	0.005	Phenolphthalein Alkalinity (CaCO3)	10
Magnesium (Mg)	0.15	Bicarbonate (CaCO3)	
Magnesium (CaCO3)		Carbonate (CaCO3)	
Manganese (Mn)	0.005		
Molybdenum (Mo)	0.04	Inorganic Phosphate (PO4)	2
Nickel (Ni)	0.01	Ortho Phosphate (PO4)	2
Phosphorus (P)	0.03	Organic Phosphate (PO4)	2
Potassium (K)	0.12	Polyphosphate (PO4)	2
Silicon (Si)		Total Phosphate (PO4)	2
Silica (SiO2)			
Sodium (Na)		Conductivity at 25°C - meter	1
Sodium (CaCO3)		pH @ 25°C - meter	1
Strontium (Sr)	0.005		
Vanadium (V)	0.01		
Zinc (Zn)	0.01		

* Dependent on total dissolved solids concentration, and test method.

* Dependent on total dissolved solids concentration and test method.

©2016 Ecolab USA Inc. All Rights Reserved

APPENDIX D: CHEMISTRY

Scenario: Vancouver Terminal SCN_002
Flow Name: City Water
Flow Rate: 48.0563 gpm

Cation			
Symbol	**Name**	**mg/L as $CaCO_3$**	**mg/L as Ion**
Ag	Silver	ND	ND
Al	Aluminum	ND	ND
As	Arsenic	ND	ND
Au	Gold	ND	ND
B	Boron	ND	ND
Ba	Barium	0.0066	0.0090
Be	Beryllium	ND	ND
Ca	Calcium	82.4110	33.0000
Cd	Cadmium	ND	ND
Co	Cobalt	ND	ND
Cr	Chromium	ND	ND
Cu	Copper	ND	ND
Cu I	Copper (cuprous)	ND	ND
Fe	Iron	ND	ND
Fe II	Iron (ferrous)	ND	ND
H+	Hydronium	ND	ND
Hg	Mercury	ND	ND
K	Potassium	4.2238	3.3000
Li	Lithium	ND	ND
Mg	Magnesium	39.9442	9.7000
Mn	Manganese (Manganous)	ND	ND
Mo	Molybdenum	ND	ND
Na	Sodium	13.9313	6.4000
NH4	Ammonia	NT	NT
Ni	Nickel	ND	ND
Pb	Lead	ND	ND
S	Sulfur	NA	NA
Sb	Antimony	ND	ND
Se	Selenium	ND	ND
Si	Silicon	ND	ND
Sm	Samarium	ND	ND
Sn	Tin	ND	ND
Sr	Strontium	0.1394	0.1220
Ti	Titanium	ND	ND
Tl	Thallium (thallic)	ND	ND
U	Uranium (valence 4)	ND	ND
V	Vanadium	ND	ND
Zn	Zinc	0.0275	0.0200

©2016 Ecolab USA Inc. All Rights Reserved

Scenario: Vancouver Terminal SCN_002
Flow Name: City Water
Flow Rate: 48.0563 gpm

Anion			
Symbol	**Name**	**mg/L as $CaCO_3$**	**mg/L as Ion**
B4O7	Borate	ND	ND
Br	Bromide	ND	ND
Cl	Chloride	9.7397	6.9000
CN	Cyanide	ND	ND
CO3	Carbonate	ND	ND
F	Fluoride	NT	NT
HCO3	Bicarbonate	107.8371	131.4834
I	Iodide	ND	ND
MoO4	Molybdate	ND	ND
NO2	Nitrite	ND	ND
NO3	Nitrate	12.1063	15.0000
OH	Hydrate	ND	ND
P	Phosphorous (Valence 3)	ND	ND
PO4	Phosphate (as PO4)	0.5816	0.3679
SiO3	Silicate	ND	ND
SO3	Sulfite	ND	ND
SO4	Sulfate	10.4188	10.0000

©2016 Ecolab USA Inc. All Rights Reserved

Scenario: Vancouver Terminal SCN_002
Flow Name: City Water
Flow Rate: 48.0563 gpm

Other			
Symbol	**Name**	**mg/L as $CaCO_3$**	**mg/L as Ion**
$/1000 gal	Dollar per 1000 gallon	NT	NT
BOD5	5 Day Biochemical Oxygen Demand	NT	NT
CO2	Carbon Dioxide	NT	NT
CO2-gas	Carbon Dioxide Gas (Undissolved)	NT	NT
COD	Chemical Oxygen Demand	NT	NT
Conductivity	Conductivity	270.3779	270.3779
Enthalpy	Enthalpy	NC	NC
FOG	Free Oil and Grease	NT	NT
H2S	Hydrogen Sulfide	NT	NT
Ionic Strength	Ionic Strength	0.0042	0.0042
Langlier Stability Index	Langlier Stability Index	-0.3479	-0.3479
M Alkalinity	Total Alkalinity	107.8371	107.8371
NH3	Ammonia	NC	NC
O2	Oxygen	NT	NT
OCl	Hypoclorite	NT	NT
P Alkalinity	P Alkalinity	ND	ND
pH	pH	7.7000	7.7000
pHeq	pHeq	7.5180	7.5180
pHs	pHs	8.0479	8.0479
psia	Pounds per Square Inch Absolute	14.6960	14.6960
Puckorius Scale Index	Puckorius Scale Index	8.5778	8.5778
Ryznar Index	Ryznar Index	8.3958	8.3958
SAR	Saline Absorption Ratio	0.2511	0.2511
Screenings	Screenings	NA	NA
Silica Sol	Silica Sol	NA	NA
SiO2	Silica	39.9786	48.0000
SiO2-Colloidal	SiO2-Colloidal	0.8329	1.0000
Sulfur	Sulfur	NA	NA
TDS	Total Disolved Solids	216.3023	216.3023
TempF	Temperature Fahrenheit	70.0000	70.0000
TOC	Total Organic Carbon	NT	NT
Total Hardness	Total Hardness	122.3552	122.3552
TSS	Total Suspended Solids	NT	NT

©2016 Ecolab USA Inc. All Rights Reserved

Scenario: Vancouver Terminal SCN_002
Flow Name: Softened Water
Flow Rate: 35.2922 gpm

Cation			
Symbol	Name	mg/L as $CaCO_3$	mg/L as Ion
Ag	Silver	ND	ND
Al	Aluminum	ND	ND
As	Arsenic	ND	ND
Au	Gold	ND	ND
B	Boron	ND	ND
Ba	Barium	0.0001	0.0001
Be	Beryllium	0.0000	0.0000
Ca	Calcium	0.0102	0.0041
Cd	Cadmium	0.0000	0.0000
Co	Cobalt	0.0000	0.0000
Cr	Chromium	0.0000	0.0000
Cu	Copper	0.0000	0.0000
Cu I	Copper (cuprous)	0.0000	0.0000
Fe	Iron	0.0000	0.0000
Fe II	Iron (ferrous)	0.0000	0.0000
H+	Hydronium	0.0000	0.0000
Hg	Mercury	0.0000	0.0000
K	Potassium	0.0634	0.0495
Li	Lithium	0.0000	0.0000
Mg	Magnesium	0.0074	0.0018
Mn	Manganese (Manganous)	0.0000	0.0000
Mo	Molybdenum	0.0000	0.0000
Na	Sodium	2.0372	0.9359
NH4	Ammonia	0.0000	0.0000
Ni	Nickel	0.0000	0.0000
Pb	Lead	0.0000	0.0000
S	Sulfur	0.0000	0.0000
Sb	Antimony	0.0000	0.0000
Se	Selenium	0.0000	0.0000
Si	Silicon	0.0000	0.0000
Sm	Samarium	0.0000	0.0000
Sn	Tin	0.0000	0.0000
Sr	Strontium	0.0021	0.0018
Ti	Titanium	0.0000	0.0000
Tl	Thallium (thallic)	0.0000	0.0000
U	Uranium (valence 4)	0.0000	0.0000
V	Vanadium	0.0000	0.0000
Zn	Zinc	0.0004	0.0003

©2016 Ecolab USA Inc. All Rights Reserved

Scenario: Vancouver Terminal SCN_002
Flow Name: Softened Water
Flow Rate: 35.2922 gpm

Anion			
Symbol	**Name**	**mg/L as $CaCO_3$**	**mg/L as Ion**
B4O7	Borate	ND	ND
Br	Bromide	ND	ND
Cl	Chloride	0.1461	0.1035
CN	Cyanide	ND	ND
CO3	Carbonate	ND	ND
F	Fluoride	NT	NT
HCO3	Bicarbonate	1.5916	1.9406
I	Iodide	ND	ND
MoO4	Molybdate	ND	ND
NO2	Nitrite	ND	ND
NO3	Nitrate	0.1816	0.2250
OH	Hydrate	ND	ND
P	Phosphorous (Valence 3)	ND	ND
PO4	Phosphate (as PO4)	0.0087	0.0055
SiO3	Silicate	ND	ND
SO3	Sulfite	ND	ND
SO4	Sulfate	0.1927	0.1850

©2016 Ecolab USA Inc. All Rights Reserved

Scenario: Vancouver Terminal SCN_002
Flow Name: Softened Water
Flow Rate: 35.2922 gpm

Other			
Symbol	**Name**	**mg/L as $CaCO_3$**	**mg/L as Ion**
$/1000 gal	Dollar per 1000 gallon	0.0000	NC
BOD5	5 Day Biochemical Oxygen Demand	NT	NT
CO2	Carbon Dioxide	0.4103	0.3608
CO2-gas	Carbon Dioxide Gas (Undissolved)	0.8038	0.7069
COD	Chemical Oxygen Demand	NT	NT
Conductivity	Conductivity	4.3164	4.3164
Enthalpy	Enthalpy	NC	NC
FOG	Free Oil and Grease	ND	ND
H2S	Hydrogen Sulfide	NT	NT
Ionic Strength	Ionic Strength	0.0000	0.0000
Langlier Stability Index	Langlier Stability Index	-6.7348	-6.7348
M Alkalinity	Total Alkalinity	1.5916	1.5916
NH3	Ammonia	NT	NT
O2	Oxygen	NT	NT
OCl	Hypoclorite	NT	NT
P Alkalinity	P Alkalinity	ND	ND
pH	pH	6.8153	6.8153
pHeq	pHeq	4.8357	4.8357
pHs	pHs	13.5502	13.5502
psia	Pounds per Square Inch Absolute	44.6959	44.6959
Puckorius Scale Index	Puckorius Scale Index	22.2646	22.2646
Ryznar Index	Ryznar Index	20.2850	20.2850
SAR	Saline Absorption Ratio	3.0620	3.0620
Screenings	Screenings	NA	NA
Silica Sol	Silica Sol	NA	NA
SiO2	Silica	0.5997	0.7200
SiO2-Colloidal	SiO2-Colloidal	0.0125	0.0150
Sulfur	Sulfur	NA	NA
TDS	Total Disolved Solids	3.4531	3.4531
TempF	Temperature Fahrenheit	75.2618	75.2618
TOC	Total Organic Carbon	NT	NT
Total Hardness	Total Hardness	0.0176	0.0176
TSS	Total Suspended Solids	2.8509	2.8509

©2016 Ecolab USA Inc. All Rights Reserved

Scenario: Vancouver Terminal SCN_002
Flow Name: Condensate return
Flow Rate: 133.926 gpm

Cation			
Symbol	**Name**	**mg/L as $CaCO_3$**	**mg/L as Ion**
Ag	Silver	ND	ND
Al	Aluminum	ND	ND
As	Arsenic	ND	ND
Au	Gold	ND	ND
B	Boron	ND	ND
Ba	Barium	ND	ND
Be	Beryllium	ND	ND
Ca	Calcium	ND	ND
Cd	Cadmium	ND	ND
Co	Cobalt	ND	ND
Cr	Chromium	ND	ND
Cu	Copper	ND	ND
Cu I	Copper (cuprous)	ND	ND
Fe	Iron	ND	ND
Fe II	Iron (ferrous)	ND	ND
H+	Hydronium	ND	ND
Hg	Mercury	ND	ND
K	Potassium	0.0008	0.0006
Li	Lithium	ND	ND
Mg	Magnesium	ND	ND
Mn	Manganese (Manganous)	ND	ND
Mo	Molybdenum	ND	ND
Na	Sodium	0.1260	0.0579
NH4	Ammonia	ND	ND
Ni	Nickel	ND	ND
Pb	Lead	ND	ND
S	Sulfur	ND	ND
Sb	Antimony	ND	ND
Se	Selenium	ND	ND
Si	Silicon	ND	ND
Sm	Samarium	ND	ND
Sn	Tin	ND	ND
Sr	Strontium	ND	ND
Ti	Titanium	ND	ND
Tl	Thallium (thallic)	ND	ND
U	Uranium (valence 4)	ND	ND
V	Vanadium	ND	ND
Zn	Zinc	ND	ND

©2016 Ecolab USA Inc. All Rights Reserved

Scenario: Vancouver Terminal SCN_002
Flow Name: Condensate return
Flow Rate: 133.926 gpm

Anion			
Symbol	**Name**	**mg/L as $CaCO_3$**	**mg/L as Ion**
B4O7	Borate	ND	ND
Br	Bromide	ND	ND
Cl	Chloride	0.0018	0.0012
CN	Cyanide	ND	ND
CO3	Carbonate	0.0298	0.0179
F	Fluoride	0.0000	0.0000
HCO3	Bicarbonate	0.0085	0.0104
I	Iodide	ND	ND
MoO4	Molybdate	ND	ND
NO2	Nitrite	ND	ND
NO3	Nitrate	0.0022	0.0027
OH	Hydrate	ND	ND
P	Phosphorous (Valence 3)	ND	ND
PO4	Phosphate (as PO4)	0.0001	0.0001
SiO3	Silicate	NA	NA
SO3	Sulfite	0.0821	0.0657
SO4	Sulfate	0.0023	0.0022

©2016 Ecolab USA Inc. All Rights Reserved

Scenario: Vancouver Terminal SCN_002
Flow Name: Condensate return
Flow Rate: 133.926 gpm

Other			
Symbol	**Name**	**mg/L as $CaCO_3$**	**mg/L as Ion**
$/1000 gal	Dollar per 1000 gallon	NC	NC
BOD5	5 Day Biochemical Oxygen Demand	NT	NT
CO2	Carbon Dioxide	NT	NT
CO2-gas	Carbon Dioxide Gas (Undissolved)	0.2035	0.1790
COD	Chemical Oxygen Demand	NT	NT
Conductivity	Conductivity	0.1984	0.1984
Enthalpy	Enthalpy	NC	NC
FOG	Free Oil and Grease	NT	NT
H2S	Hydrogen Sulfide	NT	NT
Ionic Strength	Ionic Strength	NC	NC
Langlier Stability Index	Langlier Stability Index	NC	NC
M Alkalinity	Total Alkalinity	0.0383	0.0383
NH3	Ammonia	NT	NT
O2	Oxygen	NT	NT
OCl	Hypoclorite	NT	NT
P Alkalinity	P Alkalinity	0.0149	0.0149
pH	pH	7.5337	7.5337
pHeq	pHeq	2.4644	2.4644
pHs	pHs	0.0000	0.0000
psia	Pounds per Square Inch Absolute	19.6960	19.6960
Puckorius Scale Index	Puckorius Scale Index	NC	NC
Ryznar Index	Ryznar Index	NC	NC
SAR	Saline Absorption Ratio	NC	NC
Screenings	Screenings	NA	NA
Silica Sol	Silica Sol	NA	NA
SiO2	Silica	0.0001	0.0001
SiO2-Colloidal	SiO2-Colloidal	ND	ND
Sulfur	Sulfur	NA	NA
TDS	Total Disolved Solids	0.1587	0.1587
TempF	Temperature Fahrenheit	227.1465	227.1465
TOC	Total Organic Carbon	NT	NT
Total Hardness	Total Hardness	NC	NC
TSS	Total Suspended Solids	0.0345	0.0345

©2016 Ecolab USA Inc. All Rights Reserved

Scenario: Vancouver Terminal SCN_002
Flow Name: Boiler Feed Water
Flow Rate: 169.218 gpm

Cation			
Symbol	Name	mg/L as $CaCO_3$	mg/L as Ion
Ag	Silver	ND	ND
Al	Aluminum	ND	ND
As	Arsenic	ND	ND
Au	Gold	ND	ND
B	Boron	ND	ND
Ba	Barium	ND	ND
Be	Beryllium	ND	ND
Ca	Calcium	0.0021	0.0009
Cd	Cadmium	ND	ND
Co	Cobalt	ND	ND
Cr	Chromium	ND	ND
Cu	Copper	ND	ND
Cu I	Copper (cuprous)	ND	ND
Fe	Iron	ND	ND
Fe II	Iron (ferrous)	ND	ND
H+	Hydronium	ND	ND
Hg	Mercury	ND	ND
K	Potassium	0.0138	0.0108
Li	Lithium	ND	ND
Mg	Magnesium	0.0015	0.0004
Mn	Manganese (Manganous)	ND	ND
Mo	Molybdenum	0.0000	0.0000
Na	Sodium	1.5724	0.7224
NH4	Ammonia	ND	ND
Ni	Nickel	ND	ND
Pb	Lead	ND	ND
S	Sulfur	ND	ND
Sb	Antimony	ND	ND
Se	Selenium	ND	ND
Si	Silicon	ND	ND
Sm	Samarium	ND	ND
Sn	Tin	ND	ND
Sr	Strontium	0.0004	0.0004
Ti	Titanium	ND	ND
Tl	Thallium (thallic)	ND	ND
U	Uranium (valence 4)	ND	ND
V	Vanadium	ND	ND
Zn	Zinc	0.0001	0.0001

©2016 Ecolab USA Inc. All Rights Reserved

Scenario: Vancouver Terminal SCN_002
Flow Name: Boiler Feed Water
Flow Rate: 169.218 gpm

Anion			
Symbol	**Name**	**mg/L as $CaCO_3$**	**mg/L as Ion**
B4O7	Borate	ND	ND
Br	Bromide	ND	ND
Cl	Chloride	0.0319	0.0226
CN	Cyanide	ND	ND
CO3	Carbonate	1.3142	0.7879
F	Fluoride	NT	NT
HCO3	Bicarbonate	0.0959	0.1169
I	Iodide	ND	ND
MoO4	Molybdate	ND	ND
NO2	Nitrite	ND	ND
NO3	Nitrate	0.0396	0.0491
OH	Hydrate	ND	ND
P	Phosphorous (Valence 3)	ND	ND
PO4	Phosphate (as PO4)	0.0019	0.0012
SiO3	Silicate	NT	NT
SO3	Sulfite	0.0650	0.0520
SO4	Sulfate	0.0420	0.0403

©2016 Ecolab USA Inc. All Rights Reserved

Scenario: Vancouver Terminal SCN_002
Flow Name: Boiler Feed Water
Flow Rate: 169.218 gpm

Other			
Symbol	**Name**	**mg/L as $CaCO_3$**	**mg/L as Ion**
$/1000 gal	Dollar per 1000 gallon	NC	NC
BOD5	5 Day Biochemical Oxygen Demand	NT	NT
CO2	Carbon Dioxide	NT	NT
CO2-gas	Carbon Dioxide Gas (Undissolved)	NT	NT
COD	Chemical Oxygen Demand	NT	NT
Conductivity	Conductivity	2.2561	2.2561
Enthalpy	Enthalpy	NC	NC
FOG	Free Oil and Grease	ND	ND
H2S	Hydrogen Sulfide	NT	NT
Ionic Strength	Ionic Strength	NC	NC
Langlier Stability Index	Langlier Stability Index	-3.6228	-3.6228
M Alkalinity	Total Alkalinity	1.4101	1.4101
NH3	Ammonia	NT	NT
O2	Oxygen	NT	NT
OCl	Hypoclorite	NT	NT
P Alkalinity	P Alkalinity	0.6571	0.6571
pH	pH	9.1021	9.1021
pHeq	pHeq	4.7586	4.7586
pHs	pHs	12.7249	12.7249
psia	Pounds per Square Inch Absolute	24.6959	24.6959
Puckorius Scale Index	Puckorius Scale Index	20.6912	20.6912
Ryznar Index	Ryznar Index	16.3478	16.3478
SAR	Saline Absorption Ratio	5.1753	5.1753
Screenings	Screenings	NA	NA
Silica Sol	Silica Sol	NA	NA
SiO2	Silica	0.1252	0.1503
SiO2-Colloidal	SiO2-Colloidal	0.0026	0.0031
Sulfur	Sulfur	NA	NA
TDS	Total Disolved Solids	1.8049	1.8049
TempF	Temperature Fahrenheit	240.0000	240.0000
TOC	Total Organic Carbon	NT	NT
Total Hardness	Total Hardness	0.0037	0.0037
TSS	Total Suspended Solids	0.6219	0.6219

©2016 Ecolab USA Inc. All Rights Reserved

Scenario: Vancouver Terminal SCN_002
Flow Name: Boiler BD
Flow Rate: 1.69218 gpm

Cation			
Symbol	Name	mg/L as $CaCO_3$	mg/L as Ion
Ag	Silver	ND	ND
Al	Aluminum	ND	ND
As	Arsenic	ND	ND
Au	Gold	ND	ND
B	Boron	ND	ND
Ba	Barium	ND	ND
Be	Beryllium	ND	ND
Ca	Calcium	ND	ND
Cd	Cadmium	ND	ND
Co	Cobalt	ND	ND
Cr	Chromium	ND	ND
Cu	Copper	ND	ND
Cu I	Copper (cuprous)	ND	ND
Fe	Iron	ND	ND
Fe II	Iron (ferrous)	ND	ND
H+	Hydronium	ND	ND
Hg	Mercury	ND	ND
K	Potassium	1.3062	1.0205
Li	Lithium	ND	ND
Mg	Magnesium	ND	ND
Mn	Manganese (Manganous)	ND	ND
Mo	Molybdenum	ND	ND
Na	Sodium	215.9435	99.2036
NH4	Ammonia	ND	ND
Ni	Nickel	ND	ND
Pb	Lead	ND	ND
S	Sulfur	ND	ND
Sb	Antimony	ND	ND
Se	Selenium	ND	ND
Si	Silicon	ND	ND
Sm	Samarium	ND	ND
Sn	Tin	ND	ND
Sr	Strontium	ND	ND
Ti	Titanium	ND	ND
Tl	Thallium (thallic)	ND	ND
U	Uranium (valence 4)	ND	ND
V	Vanadium	ND	ND
Zn	Zinc	0.0085	0.0062

©2016 Ecolab USA Inc. All Rights Reserved

Scenario: Vancouver Terminal SCN_002
Flow Name: Boiler BD
Flow Rate: 1.69218 gpm

Anion			
Symbol	**Name**	**mg/L as $CaCO_3$**	**mg/L as Ion**
B4O7	Borate	ND	ND
Br	Bromide	ND	ND
Cl	Chloride	3.0121	2.1339
CN	Cyanide	ND	ND
CO3	Carbonate	51.0323	30.5973
F	Fluoride	0.0000	0.0000
HCO3	Bicarbonate	14.5948	17.7951
I	Iodide	ND	ND
MoO4	Molybdate	ND	ND
NO2	Nitrite	ND	ND
NO3	Nitrate	3.7440	4.6389
OH	Hydrate	ND	ND
P	Phosphorous (Valence 3)	ND	ND
PO4	Phosphate (as PO4)	0.1799	0.1138
SiO3	Silicate	NA	NA
SO3	Sulfite	140.7221	112.5702
SO4	Sulfate	3.9730	3.8133

©2016 Ecolab USA Inc. All Rights Reserved

Scenario: Vancouver Terminal SCN_002
Flow Name: Boiler BD
Flow Rate: 1.69218 gpm

Other			
Symbol	**Name**	**mg/L as $CaCO_3$**	**mg/L as Ion**
$/1000 gal	Dollar per 1000 gallon	NC	NC
BOD5	5 Day Biochemical Oxygen Demand	NT	NT
CO2	Carbon Dioxide	NT	NT
CO2-gas	Carbon Dioxide Gas (Undissolved)	NT	NT
COD	Chemical Oxygen Demand	NT	NT
Conductivity	Conductivity	339.8661	339.8661
Enthalpy	Enthalpy	NC	NC
FOG	Free Oil and Grease	ND	ND
H2S	Hydrogen Sulfide	NT	NT
Ionic Strength	Ionic Strength	0.0042	0.0042
Langlier Stability Index	Langlier Stability Index	0.0000	0.0000
M Alkalinity	Total Alkalinity	65.6271	65.6271
NH3	Ammonia	NT	NT
O2	Oxygen	NT	NT
OCl	Hypoclorite	NT	NT
P Alkalinity	P Alkalinity	25.5162	25.5162
pH	pH	10.3037	10.3037
pHeq	pHeq	7.2020	7.2020
pHs	pHs	NC	NC
psia	Pounds per Square Inch Absolute	14.6960	14.6960
Puckorius Scale Index	Puckorius Scale Index	NC	NC
Ryznar Index	Ryznar Index	NC	NC
SAR	Saline Absorption Ratio	NC	NC
Screenings	Screenings	NA	NA
Silica Sol	Silica Sol	NA	NA
SiO2	Silica	12.7654	15.3267
SiO2-Colloidal	SiO2-Colloidal	ND	ND
Sulfur	Sulfur	NA	NA
TDS	Total Disolved Solids	271.8929	271.8929
TempF	Temperature Fahrenheit	95.0000	95.0000
TOC	Total Organic Carbon	NT	NT
Total Hardness	Total Hardness	NC	NC
TSS	Total Suspended Solids	59.1845	59.1845

©2016 Ecolab USA Inc. All Rights Reserved

Scenario: Vancouver Terminal SCN_002
Flow Name: RO Waste Water
Flow Rate: 11.7641 gpm

Cation			
Symbol	Name	mg/L as $CaCO_3$	mg/L as Ion
Ag	Silver	ND	ND
Al	Aluminum	ND	ND
As	Arsenic	ND	ND
Au	Gold	ND	ND
B	Boron	ND	ND
Ba	Barium	0.0259	0.0356
Be	Beryllium	0.0000	0.0000
Ca	Calcium	325.9355	130.5150
Cd	Cadmium	ND	ND
Co	Cobalt	ND	ND
Cr	Chromium	ND	ND
Cu	Copper	ND	ND
Cu I	Copper (cuprous)	ND	ND
Fe	Iron	ND	ND
Fe II	Iron (ferrous)	ND	ND
H+	Hydronium	ND	ND
Hg	Mercury	ND	ND
K	Potassium	16.7051	13.0515
Li	Lithium	ND	ND
Mg	Magnesium	157.9792	38.3635
Mn	Manganese (Manganous)	ND	ND
Mo	Molybdenum	ND	ND
Na	Sodium	59.9000	27.5178
NH4	Ammonia	ND	ND
Ni	Nickel	ND	ND
Pb	Lead	ND	ND
S	Sulfur	ND	ND
Sb	Antimony	ND	ND
Se	Selenium	ND	ND
Si	Silicon	ND	ND
Sm	Samarium	ND	ND
Sn	Tin	ND	ND
Sr	Strontium	0.5512	0.4825
Ti	Titanium	ND	ND
Tl	Thallium (thallic)	ND	ND
U	Uranium (valence 4)	ND	ND
V	Vanadium	ND	ND
Zn	Zinc	0.1086	0.0791

©2016 Ecolab USA Inc. All Rights Reserved

Scenario: Vancouver Terminal SCN_002
Flow Name: RO Waste Water
Flow Rate: 11.7641 gpm

Anion			
Symbol	**Name**	**mg/L as $CaCO_3$**	**mg/L as Ion**
B4O7	Borate	ND	ND
Br	Bromide	ND	ND
Cl	Chloride	38.5206	27.2895
CN	Cyanide	ND	ND
CO3	Carbonate	ND	ND
F	Fluoride	NT	NT
HCO3	Bicarbonate	421.6943	514.1622
I	Iodide	ND	ND
MoO4	Molybdate	ND	ND
NO2	Nitrite	ND	ND
NO3	Nitrate	47.8805	59.3250
OH	Hydrate	ND	ND
P	Phosphorous (Valence 3)	ND	ND
PO4	Phosphate (as PO4)	2.3004	1.4552
SiO3	Silicate	NA	NA
SO3	Sulfite	ND	ND
SO4	Sulfate	50.8097	48.7672

©2016 Ecolab USA Inc. All Rights Reserved

Scenario: Vancouver Terminal SCN_002
Flow Name: RO Waste Water
Flow Rate: 11.7641 gpm

Other			
Symbol	**Name**	**mg/L as $CaCO_3$**	**mg/L as Ion**
$/1000 gal	Dollar per 1000 gallon	NC	NC
BOD5	5 Day Biochemical Oxygen Demand	NT	NT
CO2	Carbon Dioxide	0.4103	0.3608
CO2-gas	Carbon Dioxide Gas (Undissolved)	0.8038	0.7069
COD	Chemical Oxygen Demand	NT	NT
Conductivity	Conductivity	1076.3053	1076.3053
Enthalpy	Enthalpy	NC	NC
FOG	Free Oil and Grease	NT	NT
H2S	Hydrogen Sulfide	NT	NT
Ionic Strength	Ionic Strength	0.0166	0.0166
Langlier Stability Index	Langlier Stability Index	1.3187	1.3187
M Alkalinity	Total Alkalinity	421.6943	421.6943
NH3	Ammonia	NT	NT
O2	Oxygen	NT	NT
OCl	Hypoclorite	NT	NT
P Alkalinity	P Alkalinity	ND	ND
pH	pH	8.1808	8.1808
pHeq	pHeq	8.3856	8.3856
pHs	pHs	6.8621	6.8621
psia	Pounds per Square Inch Absolute	44.6959	44.6959
Puckorius Scale Index	Puckorius Scale Index	5.3387	5.3387
Ryznar Index	Ryznar Index	5.5435	5.5435
SAR	Saline Absorption Ratio	0.5430	0.5430
Screenings	Screenings	NA	NA
Silica Sol	Silica Sol	NA	NA
SiO2	Silica	158.1153	189.8400
SiO2-Colloidal	SiO2-Colloidal	3.2941	3.9550
Sulfur	Sulfur	NA	NA
TDS	Total Disolved Solids	861.0442	861.0442
TempF	Temperature Fahrenheit	75.2618	75.2618
TOC	Total Organic Carbon	NT	NT
Total Hardness	Total Hardness	483.9146	483.9146
TSS	Total Suspended Solids	0.0000	0.0000

©2016 Ecolab USA Inc. All Rights Reserved

Scenario: Vancouver Terminal SCN_002
Flow Name: Final Waste
Flow Rate: 15.5563 gpm

Cation			
Symbol	Name	mg/L as $CaCO_3$	mg/L as Ion
Ag	Silver	ND	ND
Al	Aluminum	ND	ND
As	Arsenic	ND	ND
Au	Gold	ND	ND
B	Boron	ND	ND
Ba	Barium	0.0200	0.0275
Be	Beryllium	0.0000	0.0000
Ca	Calcium	251.7791	100.8204
Cd	Cadmium	ND	ND
Co	Cobalt	ND	ND
Cr	Chromium	ND	ND
Cu	Copper	ND	ND
Cu I	Copper (cuprous)	ND	ND
Fe	Iron	ND	ND
Fe II	Iron (ferrous)	ND	ND
H+	Hydronium	ND	ND
Hg	Mercury	ND	ND
K	Potassium	13.0465	10.1931
Li	Lithium	ND	ND
Mg	Magnesium	122.0360	29.6351
Mn	Manganese (Manganous)	ND	ND
Mo	Molybdenum	ND	ND
Na	Sodium	69.6925	32.0165
NH4	Ammonia	ND	ND
Ni	Nickel	ND	ND
Pb	Lead	ND	ND
S	Sulfur	ND	ND
Sb	Antimony	ND	ND
Se	Selenium	ND	ND
Si	Silicon	ND	ND
Sm	Samarium	ND	ND
Sn	Tin	ND	ND
Sr	Strontium	0.4258	0.3727
Ti	Titanium	ND	ND
Tl	Thallium (thallic)	ND	ND
U	Uranium (valence 4)	ND	ND
V	Vanadium	ND	ND
Zn	Zinc	0.0848	0.0618

©2016 Ecolab USA Inc. All Rights Reserved

Scenario: Vancouver Terminal SCN_002
Flow Name: Final Waste
Flow Rate: 15.5563 gpm

Anion			
Symbol	**Name**	**mg/L as $CaCO_3$**	**mg/L as Ion**
B4O7	Borate	ND	ND
Br	Bromide	ND	ND
Cl	Chloride	30.0843	21.3128
CN	Cyanide	ND	ND
CO3	Carbonate	3.9780	2.3851
F	Fluoride	NT	NT
HCO3	Bicarbonate	328.3498	400.3494
I	Iodide	ND	ND
MoO4	Molybdate	ND	ND
NO2	Nitrite	ND	ND
NO3	Nitrate	38.0370	47.1287
OH	Hydrate	ND	ND
P	Phosphorous (Valence 3)	ND	ND
PO4	Phosphate (as PO4)	1.7966	1.1365
SiO3	Silicate	NA	NA
SO3	Sulfite	15.3133	12.2498
SO4	Sulfate	39.5258	37.9369

©2016 Ecolab USA Inc. All Rights Reserved

Scenario: Vancouver Terminal SCN_002
Flow Name: Final Waste
Flow Rate: 15.5563 gpm

Other			
Symbol	**Name**	**mg/L as $CaCO_3$**	**mg/L as Ion**
$/1000 gal	Dollar per 1000 gallon	NC	NC
BOD5	5 Day Biochemical Oxygen Demand	6.4283	6.4283
CO2	Carbon Dioxide	NT	NT
CO2-gas	Carbon Dioxide Gas (Undissolved)	NT	NT
COD	Chemical Oxygen Demand	NT	NT
Conductivity	Conductivity	869.5330	869.5330
Enthalpy	Enthalpy	NC	NC
FOG	Free Oil and Grease	7.7139	7.7139
H2S	Hydrogen Sulfide	NT	NT
Ionic Strength	Ionic Strength	0.0133	0.0133
Langlier Stability Index	Langlier Stability Index	1.3559	1.3559
M Alkalinity	Total Alkalinity	332.3278	332.3278
NH3	Ammonia	NT	NT
O2	Oxygen	NT	NT
OCl	Hypoclorite	NT	NT
P Alkalinity	P Alkalinity	1.9890	1.9890
pH	pH	8.4188	8.4188
pHeq	pHeq	8.2341	8.2341
pHs	pHs	7.0630	7.0630
psia	Pounds per Square Inch Absolute	37.3828	37.3828
Puckorius Scale Index	Puckorius Scale Index	5.8918	5.8918
Ryznar Index	Ryznar Index	5.7071	5.7071
SAR	Saline Absorption Ratio	0.7188	0.7188
Screenings	Screenings	NA	NA
Silica Sol	Silica Sol	NA	NA
SiO2	Silica	123.5298	148.3151
SiO2-Colloidal	SiO2-Colloidal	2.5446	3.0552
Sulfur	Sulfur	NA	NA
TDS	Total Disolved Solids	695.6264	695.6264
TempF	Temperature Fahrenheit	75.7740	75.7740
TOC	Total Organic Carbon	NT	NT
Total Hardness	Total Hardness	373.8151	373.8151
TSS	Total Suspended Solids	6.4404	6.4404

©2016 Ecolab USA Inc. All Rights Reserved

©2016 Ecolab USA Inc. All Rights Reserved

PPV Inc. Vancouver Energy Treatment Summary

General Information

PPV Inc. has been in operation since 2003 serving as the primary wastewater pretreatment and disposal facility in the Portland area. We serve companies large and small who generate nonhazardous wastewater but do not have the resources to treat it themselves before disposal. In addition to wastewater pretreatment we offer extraction and transport services through our subsidiary company Bravo Environmental, making us a comprehensive source for all your wastewater needs.

Waste Acceptance

At PPV we are permitted to accept and treat wastewater containing oil/metals, organics, and septic. Prior to accepting any new waste stream, we require analytical testing of the material that at least matches our prescribed analytical script, this allows us to identify problem contaminants for effective treatment. Analytical testing must be done through a certified third party laboratory. Using the analytical results clients fill out and return our Waste Information Profile (WIP). When the material arrives at our facility samples are taken to ensure that it matches how it is described in the WIP, If the material does not match the load is rejected and returned to the generator or held for further testing.

We do not accept wastes containing PCB's, cyanide, DMSO, glycols, fuel and fuel derivatives, solvents, pesticides, and other hazardous material. For a full list of what we cannot accept please see our Prohibited Compounds Form.

Treatment Process

Wastes with similar characteristics are segregated into separate holding tanks and treated in batches according to an assigned treatability plan. Treatability plans are specifically designed for each waste type and use a combination of physical and chemical treatment to effectively remove problem contaminants.

All material goes through a general treatment process that removes solids using filters, sieves, shakers, dissolved air flotation, and centrifuge. Oil/metal bearing wastewater goes through additional treatment in our Oil Water Separator to separate and remove oil from the water. Removed oil is sold to a processor and the water is discharged to the municipal sewer system.

QC Monitoring

Using our in-house laboratory, we conduct self-monitoring QC checks every day on outgoing effluent to ensure compliance with our permit. Additionally, we also conduct intermittent testing at random points within our treatment train.

Copyright © BergerABAM. All Rights Reserved.

PROCESS SCHEMATIC FOR WASTEWATER DISCHARGES

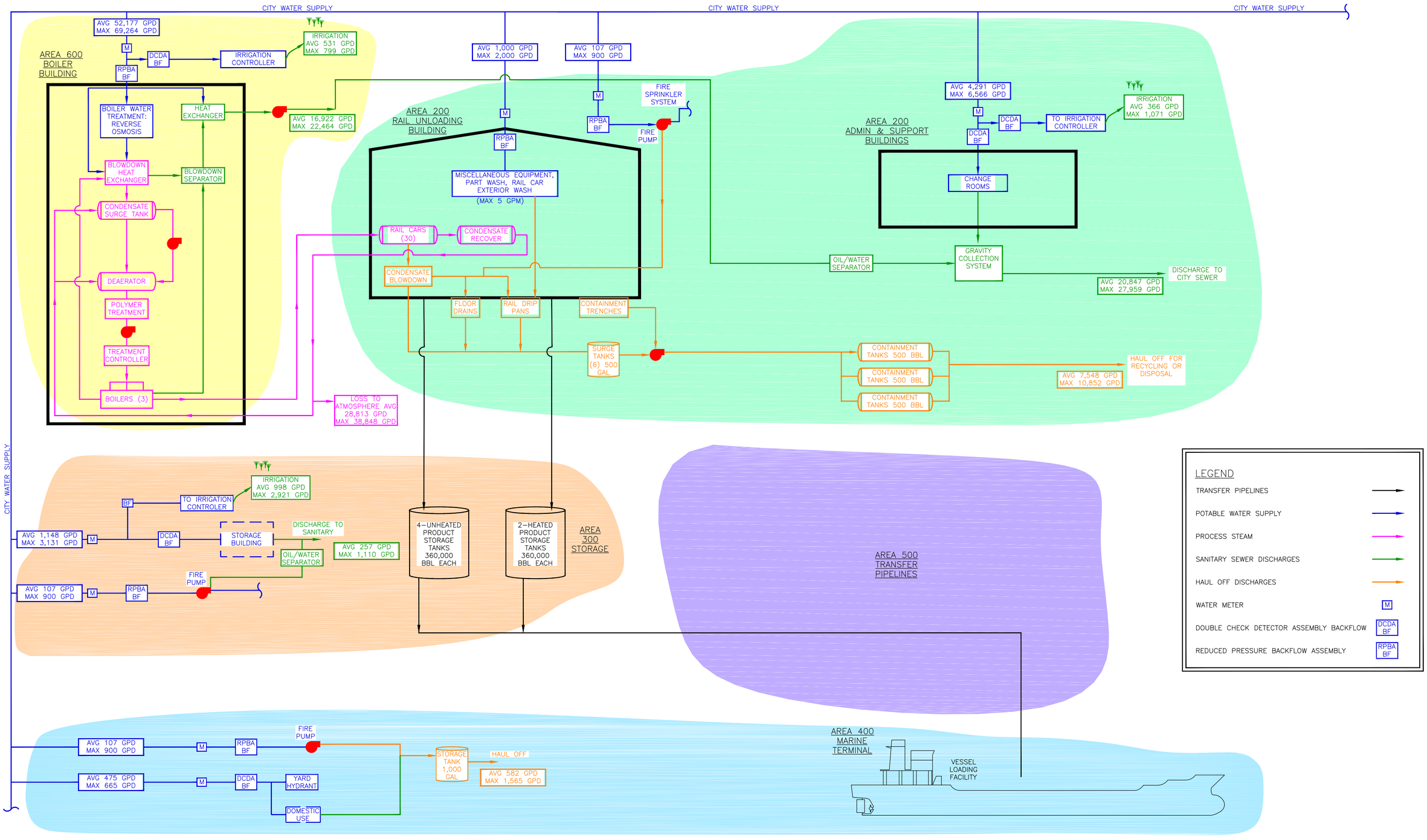

Last Saved by: Tony pritchett on: May 20, 2016 7:38 AM File: Q:\Vancouver\2013\A13.0267\00\CAD\Dwg\PRE-APP\PROCESS SCHEMATIC - WASTEWATER DISCHARGES.dwg

Vancouver Energy
National Pollutant Discharge Elimination System Permit Engineering Report

This page left blank intentionally.

Vancouver Energy
National Pollutant Discharge Elimination System Permit
Engineering Report

EFSEC Application for Site Certification No. 2013-01
Docket No. EF131590
15 October 2015

Prepared for

Tesoro Savage Petroleum Terminal LLC
5501 NW Old Lower River Road
Vancouver, Washington 98660

Prepared by

BergerABAM
210 East 13th Street, Suite 300
Vancouver, Washington 98660

Job No. A13.0267.00

This Engineering Report was prepared under the supervision and direction of the undersigned, whose seal as a registered professional engineer is affixed below.

_____
Thomas R. Wilcox, PE, Vice President
BergerABAM Inc.

Revision Summary

No.	Date	Edits/Comments [table heading]
01	27 February 2015	Submittal for Application review
02	15 October 2015	Revisions in response to EFSEC comment letter dated 6 August 2015

Vancouver Energy
National Pollutant Discharge Elimination System Permit Engineering Report

Table of Contents

Section

Executive Summary v
1. Project Overview 1
1.1 Introduction 1
1.2 Regulatory Applicability 1
1.3 Site Description 2
1.4 Existing Conditions 6
1.4.1 Stormwater Conveyance and Treatment Systems 6
1.4.2 Sewer Conveyance and Treatment Systems 13
1.4.3 Surface Water Bodies 17
1.4.4 Floodplains 18
1.4.5 Wetlands 18
1.4.6 Soils Evaluation 19
1.4.7 Past Site Remediation 19
1.4.8 Climate 24
1.5 Project Overview 24
2. Type of Industry or Business 25
3. Kind and Quantity of Product 25
4. Project Summary 25
5. Operational Quantity and Quality of Industrial Stormwater 26
5.1 Flow Control Exemption 27
5.2 Stormwater Collection and Conveyance 27
5.2.1 Collection and Conveyance System Design Standards 27
5.2.2 Area 200 – Unloading and Office 33
5.2.3 Area 300 – Storage 35
5.2.4 Area 400 – Marine Terminal 38
5.2.5 Area 500 – Transfer Pipelines 39
5.2.6 Area 600 – West Boiler 39
5.2.7 Rail Infrastructure 40
6. Industrial Stormwater Best Management Practices 40
6.1 Structural Best Management Practices 40
6.1.1 Area 200 – Unloading and Office 40
6.1.2 Area 300 – Storage 41
6.1.3 Area 400 – Marine Terminal 42
6.1.4 Area 500 – Transfer Pipelines 42
6.1.5 Area 600 – West Boiler 43

6.1.6 Rail Improvements ... 43
6.2 Operational Best Management Practices ... 45
7. Stormwater Treatment and Design ... 46
7.1 Chemicals Used in Treatment Process ... 46
7.2 Design and Sizing of Treatment Process and Units ... 46
7.2.1 Area 200 – Unloading and Office ... 48
7.2.2 Area 300 – Storage ... 50
7.2.3 Area 400 – Marine Terminal ... 52
7.2.4 Area 500 – Transfer Pipelines ... 54
7.2.5 Area 600 – West Boiler ... 54
7.2.6 Rail Infrastructure ... 54
7.3 Site Suitability ... 54
7.4 Treatment Process Operation ... 55
7.5 Treatment Bypasses ... 55
8. Operational Quantity and Quality of Industrial Water and Process Wastewater ... 55
8.1 Water Supply ... 55
8.2 Process Water ... 58
8.3 Process Wastewater ... 58
8.3.1 Area 200 Miscellaneous Part/Equipment Wash ... 59
8.3.2 Area 600 Boiler Effluent ... 60
8.3.3 Area 300 Basin Sump Effluent ... 61
8.3.4 Areas 200, 300, and 400 Fire Pump Cooling Water ... 62
9. Domestic Water and Wastewater ... 62
9.1 Water Supply ... 62
9.2 Potable Water ... 62
9.3 Domestic Wastewater ... 63
10. Oil and Hazardous Material Spill Control or Accidental Discharge Prevention ... 63
11. Receiving Water Description ... 64
11.1 Location of Discharge ... 64
11.2 Water Quality ... 64
11.3 Outfall Analysis ... 65
12. Relationship to Existing Treatment Facilities ... 65
12.1 Terminal 4 Treatment Facilities ... 65
12.2 Terminal 5 Treatment Facilities ... 65
12.3 Marine Terminal Treatment Facilities ... 66
13. Municipal Wastewater System Analysis ... 66
13.1 Conveyance System Capacity ... 66
13.2 Treatment Plant Capacity ... 67
14. Sludge Disposal ... 67
15. Ownership Operation and Maintenance Responsibility ... 67
16. Compliance with State, Local, and Federal Water Pollution Regulations and Plans ... 67
16.1 Federal Standards ... 68
16.2 State Standards ... 68
16.2.1 Statutes ... 68

16.2.2 Stormwater Management Manual 68
16.3 City Standards 70
17. Provisions for Future Construction 71
17.1 Unloading Stations 71
17.2 West Boiler 72
17.3 Product Storage Tanks 72
18. Treatment Unit Alternatives Analysis 72
18.1 Basic Treatment Units 72
18.2 Enhanced Treatment Units 73
18.3 Oil-Water Separators 73
18.4 Volatile Organics/BTEX Treatment 73
19. Design and Construction Timetable 74
20. SEPA/NEPA Compliance 74
21. List of Acronyms and Abbreviations 75

List of Tables

Table 1. Applicable Federal, State, and Local Permits and Requirements 1
Table 2. Summary of Facility Areas 4
Table 3. Drainage and Facility Areas 6
Table 4. Floodplains 18
Table 5. Design Storm Rainfall Intensity 24
Table 6. Facility Site Stormwater Summary 25
Table 7. Facility Process Wastewater Discharge Summary 26
Table 8. Domestic Wastewater Summary 26
Table 9. Summary of 25-Year Storm Event Model Results 28
Table 10. Areas 200/600 - Unloading and Office, incl West Boiler - Proposed Surface Coverage 33
Table 11. Area 200 - Unloading and Office - Collection System Model Results 34
Table 12. Area 300 - Storage Area - Proposed Surface Coverage 36
Table 13. Area 300 - Storage Area - Collection System Model Results 36
Table 14. Area 400 - Marine Terminal - Proposed Surface Coverage 39
Table 15. Rail Improvements - Proposed Surface Coverage 40
Table 16. Area 200 - Unloading and Office - Structural BMPs 41
Table 17. Area 300 - Storage - Structural BMPs 41
Table 18. Area 400 - Marine Terminal - Structural BMPs 42
Table 19. Area 500 - Transfer Pipelines - Structural BMPs 42
Table 20. West Boiler - Structural BMPs 43
Table 21. Rail Improvements - Structural BMPs 45
Table 22. Anticipated Water Quality Benchmarks 46
Table 23. Pollutant Loadings for Each Facility Surface Type 47
Table 24. Contributing Area to Water Quality Vault 0200-WQV-001 48
Table 25. Terminal 5 - Area 200 Monitoring Point 1 Summary 49
Table 26. Contributing Area to 0200-WQV-002 49
Table 27. Terminal 5 - Area 200 Monitoring Point 2 Summary 50
Table 28. Contributing Area to 0300-WQV-002 51

Table 29. Contributing Area to 0300-WQV-001 51
Table 30. Area 300 – Monitoring Point 3 Summary 52
Table 31. Contributing Area to 0400-WQV-001 and 0400-WQV-002 53
Table 32. Marine Terminal Area 400 Monitoring Point 4 Summary 54
Table 33. Process Water uses and Usage Rates 58
Table 34. Process Wastewater Sources 59
Table 35. Anticipated Effluent Constituents 60
Table 36. Detailed Effluent Analysis Summary 60
Table 37. Potable Water uses and Usage Rates 62
Table 38. Domestic Wastewater Sources 63
Table 39. Process Wastewater Constituent Concentrations 70
Table 40. Rejected Alternatives – Basic Treatment 73
Table 41. Rejected Alternatives – Enhanced Treatment 73
Table 42. Rejected Alternatives – Oil Treatment 73
Table 43. Rejected Alternatives – Volatile Organic Treatment 74
Table 44. Permitting and Construction Milestones 74

List of Figures

Figure 1. Vicinity Map 3
Figure 2. Site Plan 5
Figure 3. Existing Terminal 4 Stormwater System 7
Figure 4. Existing Terminal 5 Stormwater System 11
Figure 5. Existing Marine Terminal Stormwater System 15
Figure 6. Contaminated Media Locations 20
Figure 7. Drainage Basin Maps – Terminal 4 29
Figure 8. Drainage Basin Maps – Terminal 5 31
Figure 9. Flow Diagram for Process Water Uses and Wastewater 56
Figure 10. City Water Distribution Network 57

List of Appendices

Appendix A. NOAA Isopluvial Maps for Washington State
Appendix B. Federal Emergency Management Agency Flood Insurance Rate Maps
Appendix C. Stormwater Facility Design Plans
Appendix D. Existing Drainage Reports
Appendix E. Water Quality Model Results
Appendix F. Conveyance System Model Results
Appendix G. Oil-Water Separator Sizing Calculations
Appendix H. Water Quality Vault Sizing Calculations
Appendix I. Geotechnical Investigation Reports
Appendix J. Product, Stored Bulk Liquids, and Hazardous Material Safety Data Sheets
Appendix K. Wastewater Permit Application
Appendix L. Stormwater Permit Application
Appendix M. Utility Letters

Executive Summary

The purpose of this National Pollutant Discharge Elimination System Permit (NPDES) engineering report is to comprehensively address the design and operations of discharges from Vancouver Energy (Facility) as they pertain to industrial stormwater, domestic wastewater, and process wastewater. Tesoro Savage Petroleum Terminal LLC (Applicant) has applied to the Washington State Energy Facility Site Evaluation Council (EFSEC) for a permit to construct and operate the Facility. An Individual NPDES Industrial Stormwater Permit and a State Waste Discharge Permit to Discharge Industrial Wastewater to a Publicly Owned Treatment Works is required for the Facility in accordance with WACs 463-76-010(33), 463-76-031(1)(a), and 173-216. In response to EFSEC's request, the Applicant submitted an engineering report on 9 April 2014 and a revised version on 27 February 2015.

The Facility will not expose crude oil to stormwater under normal operations. A completely closed system located in a protective building will contain all crude oil during the rail unloading operations. Transfer of crude oil will be completed using continuously welded steel pipelines. Product will be stored in tanks, each tank equipped with (1) a floating roof to control vapors and (2) a fixed roof to keep stormwater from reaching the inside of the tank. The vessel loading operations will use hoses that will be connected to a fully piped manifold system on the vessel to avoid contact with stormwater. Inert gases displaced by the crude oil in the vessel will be piped from the vessel to marine vapor combustion units capable of achieving approximately 99.8 percent combustion of byproducts from the vessel.

The project as designed will use extensive stormwater separation methods to protect stormwater and surface water quality. Additionally, extensive monitoring, containment, and spill prevention measures will be in place to react to any upset conditions that could result in an accidental release of crude oil. A separate operations spill prevention control and countermeasures plan addresses all of the measures in place to prevent and respond to upset conditions.

Domestic wastewater will be generated by the Facility and discharged to the City of Vancouver's wastewater collection system. Domestic wastewater is solely generated on site in employee restrooms, showers, and kitchen facilities. The domestic wastewater facilities are physically separated from the portions of the facility handling crude oil to reduce any potential releases of process wastewater or product into the domestic wastewater system.

Process wastewater on site is primarily generated at the West Boiler building. A nominal amount of blowdown will be generated at the facility. The blowdown will be treated on site to water quality levels required by the City's Pretreatment Ordinance (VMC 14.10) and state and federal requirements (RCW 90.48, WAC 173-216, and 40 CFR Chapter I, Subchapter N). Other sources of process wastewater, including wash water and unloading facility floor drains, will be collected and hauled off site to an appropriate facility for disposal. Other minor sources of process wastewater includes intermittent emergency equipment cycling, which are discharged to the nearest sanitary or stormwater system upstream of treatment units.

An Individual Construction Permit also will be required under the NPDES system. A construction stormwater pollution prevention plan has been prepared and submitted under separate cover.

This report demonstrates that the Facility as designed is capable of compliance with current surface water quality regulations. Stormwater from the facility can meet the current limits set forth in the Washington State Department of Ecology Industrial Stormwater General Permit. Domestic and process wastewaters discharged from the site can meet the current limits set forth in the applicable city, state, and federal pretreatment regulations.

This page left blank intentionally.

1. Project Overview

The Vancouver Energy (Facility) will construct a facility to receive crude oil by rail, store it on site, and load it on marine vessels for shipment to various consumers and end users primarily located on the West Coast. Unit trains will be indexed through the unloading area where crude oil will be gravity-drained into the collection piping system, and pumped through transfer pipelines to storage tanks or directly to berthed marine vessels. Marine vessels will arrive and moor at the dock where crude oil will be pumped from the storage tanks and loaded to marine vessels.

1.1 Introduction

This engineering report is based on the Washington Administrative Code (WAC) 173-240 and in response to the letter, dated 6 February 2014, from the Energy Facility Site Evaluation Council (EFSEC) to Kelly Flint, Tesoro Savage Petroleum Terminal LLC (Applicant). EFSEC has requested additional supporting information related to construction stormwater and industrial stormwater and to the National Pollutant Discharge Elimination System (NPDES) permits, in writing dated 29 July 2014. Clarifications to these comments were provided to the Applicant at a meeting conducted by EFSEC on 18 September 2014.

This engineering report is amended as requested in response to the letter dated 6 August 2015 from the EFSEC to Kelly Flint, the Applicant. EFSEC requested that a comprehensive engineering report be prepared that addresses discharges from the facility for operational stormwater, domestic wastewater, and process wastewater. The application for the State Waste Discharge Permit to Discharge Industrial Wastewater to a Publicly Owned Treatment Works (POTW) and required supporting information was provided with the original Application for Site Certification (ASC) in section 5.2. This report incorporates additional information and revisions to address these comments. This engineering report addresses the operational industrial stormwater, domestic wastewater, and process wastewater systems provided for the project. A separate construction stormwater pollution prevention plan (SWPPP) has been prepared and will be submitted concurrently. Additional spill prevention control and countermeasures plans (SPCCP), as well as an oil spill contingency plan, have been submitted under separate cover.

1.2 Regulatory Applicability

As required by WAC 173-240-110, before constructing or modifying industrial stormwater facilities, engineering reports, plans, and specifications for the project must be submitted to EFSEC. Table 1 is a complete list of all federal, state, and local permits and requirements for industrial stormwater that will apply to the project if it were not reviewed under the EFSEC process.

Table 1. Applicable Federal, State, and Local Permits and Requirements

Permit or Approval	Agency/Statute and/or Regulation
National Environmental Policy Act (NEPA) Compliance	U.S. Army Corps of Engineers (USACE) (anticipated federal lead agency for this project): 40 CFR 1500-1508
Section 10 Permit	USACE: Rivers and Harbors Act 33 CFR 322
Hazardous Materials and Oil Transportation Regulations	U.S. Department of Transportation: Hazardous Material Transportation Act (HMTA), 49 CFR 100-185
State Environmental Policy Act (SEPA) Compliance	EFSEC: Revised Code of Washington (RCW) 43.21C and WAC 463-47
Hydraulic Project Approval (HPA)	Washington State Department of Fish and Wildlife (WDFW): Hydraulic Code (RCW 77.55 and WAC 220-110)
NPDES Permit Program	EFSEC: Clean Water Act, 40 CFR 122.28, RCW 90.48 and WAC 463-76

Permit or Approval	Agency/Statute and/or Regulation
NPDES Industrial Stormwater Permit	Washington State Department of Ecology (Ecology)[1]: Clean Water Act, 40 CFR 122.28, RCW 90.48 and WAC 173-220
NPDES Construction Stormwater General Permit	Ecology[1]: Clean Water Act, 40 CFR 122.28, RCW 90.48 and WAC 173-220
Model Toxics Control Act (MTCA) Consent Decree/Restrictive Covenant Work	Ecology: RCW 70.105D, RCW 64.70, WAC 173-340
Facility Oil Handling Standards • Oil Transfer Requirements • Design Standards • Operations Manual • Training/Certification • Oil Transfer Response Plans	Ecology: 33 CFR 154 (Facilities Transferring Oil or Hazardous Material in Bulk), 40 CFR 112 (Oil Pollution Prevention), 40 CFR 300 (National Oil and Hazardous Substances Pollution Contingency Plan) WAC 173-180 (Facility Oil Handling Standards)
Vessel Oil Transfer Advance Notice and Containment	Ecology: 40 CFR 112 (Oil Pollution Prevention); WAC 173-184
Spill Prevention and Contingency Plans	Ecology: 40 CFR 112 (Oil Pollution Prevention) RCW 90.56 (Oil and Hazardous Substance Spill Prevention and Response), WAC 173-180 (Facility Oil Handling Standards), WAC 173-182 (Oil Spill Contingency Plan), WAC 173-183 Oil Spill Natural Resource Damage Assessment
Dangerous/Hazardous Waste Regulations	Ecology: RCRA 40 CFR 260; RCW 70.105 (Hazardous Waste Management), WAC 173-303
Site Plan Review	City of Vancouver (City): VMC 20.270
Shoreline Substantial Development Permit	City: RCW 90.58 and City Shoreline Management Program (SMP)
Critical Areas Permit	City: VMC 20.740
Major Grading Permit	City: International Building Code (IBC), VMC Title 12 and Title 17
Civil Engineering Review	City: VMC Title 10, Title 11, and Title 14
Industrial Waste Discharge Permit	City: Wastewater Discharge Standards 40 CFR Chapter I, Subchapter N, WAC 173-221A, WAC 173-216, RCW 90.48, VMC 14.10

[1] The Facility is subject to EFSEC jurisdiction and EFSEC implements its own delegated NPDES program; however, Ecology's regulations are noted here as EFSEC adopts by reference statewide water quality standards.

1.3 Site Description

The proposed Facility will be constructed at the Port of Vancouver USA (Port) within the City of Vancouver (City) in Clark County, Washington. The Facility includes operations in different "areas," each area serving a different function. The site is located on the Washington shore of the Columbia River. State Route 501 (SR 501) (Lower River Road) is located immediately to the north of the site. Each area of the Facility is described in further detail below. The entire Facility will be constructed on approximately 47.4[1] acres. See the vicinity map shown in Figure 1.

[1] As part of the revisions to this Engineering Report, the Applicant prepared more detailed drawings (included in the appendices to this report), and the approximate site acreage was recalculated. Previous information submitted to EFSEC indicated an approximate site acreage of 45 acres. The addition of 2.74 acres primarily occurs relative to an increase in the transfer pipeline corridor width in locations where ground surface is currently disturbed and already subject to industrial activity. This increase in acreage does not substantively modify the analysis of environmental impacts described in the ASC Supplement as submitted to EFSEC in January 2014. However, to present accurate engineering calculations in this Engineering Report, this adjusted site acreage has been used herein, as well as in the construction and operation SWPPPs submitted under separate cover. The Applicant also acknowledges that final Facility design will take into account actual permit conditions that are not available at this time; such conditions could also result in further adjustments to the final site boundary.

Figure 1 - Vicinity Map

LEGEND

- Project Boundary
- Vancouver_WA
- Portland,_Oregon

VANCOUVER ENERGY

Tesoro Savage Petroleum Terminal LLC

Date: February 2015

Map Notes: Aerial photo dated July 2010, courtesy of ESRI World Imagery service

N

Most of the site will be leased from the Port and will be used exclusively by the Applicant for the construction and operation of the Facility. The transfer pipelines will be located on non-exclusive easements within the port.

The site is located in the SE 1/4 of Section 18, NW 1/4 of Section 19, and the NW and NE 1/4 of Section 20, Township 2 North, Range 1 East W.M. Marine operations will occur at Port Berths 13 and 14 located at approximately Columbia River Mile 103.5 (RM 103.5). Table 2 lists the project site areas that are discussed in detail below while Figure 2 shows a site plan schematic that demonstrates the site development plan.

This engineering report describes site conditions and operational activities in detail and enumerates the proposed stormwater systems and structural and operational best management practices (BMPs). The report is organized according to the following Facility elements, which are referred to as the six "areas" listed in Table 2.

Table 2. Summary of Facility Areas

Facility Area	Project Elements	Acreage
200 – Unloading and Office	Rail Unloading Area Control Rooms/E-houses Fire Pump and Foam Building Admin/Support Buildings	7.8 Acres
300 – Storage	Crude Oil Storage Tanks Secondary Containment Berm Storage Building Pump Basin Control Room/E-house Fire Pump and Foam Building	20.8 Acres
400 – Marine Terminal	Marine Vessel Loading Hoses and Equipment Control Room/E-house Dock Safety Unit Marine Vapor Control Units Vapor Blower Skid Spill Prevention, Response and Containment Equipment Dock Improvements Piping from Vessel Loading to Marine Vapor Combustion Units	7.7 Acres
500 – Transfer Pipelines	Transfer Piping from Area 200 To Area 300 Transfer Piping from Area 300 To Area 400	4.9 Acres
600 – West Boiler	West Boiler Building Piping from West Boiler Building to Rail Unloading Area	0.8 Acre
Rail Improvements	Rail Transportation Corridor	5.4 Acres
Total		47.4 Acres

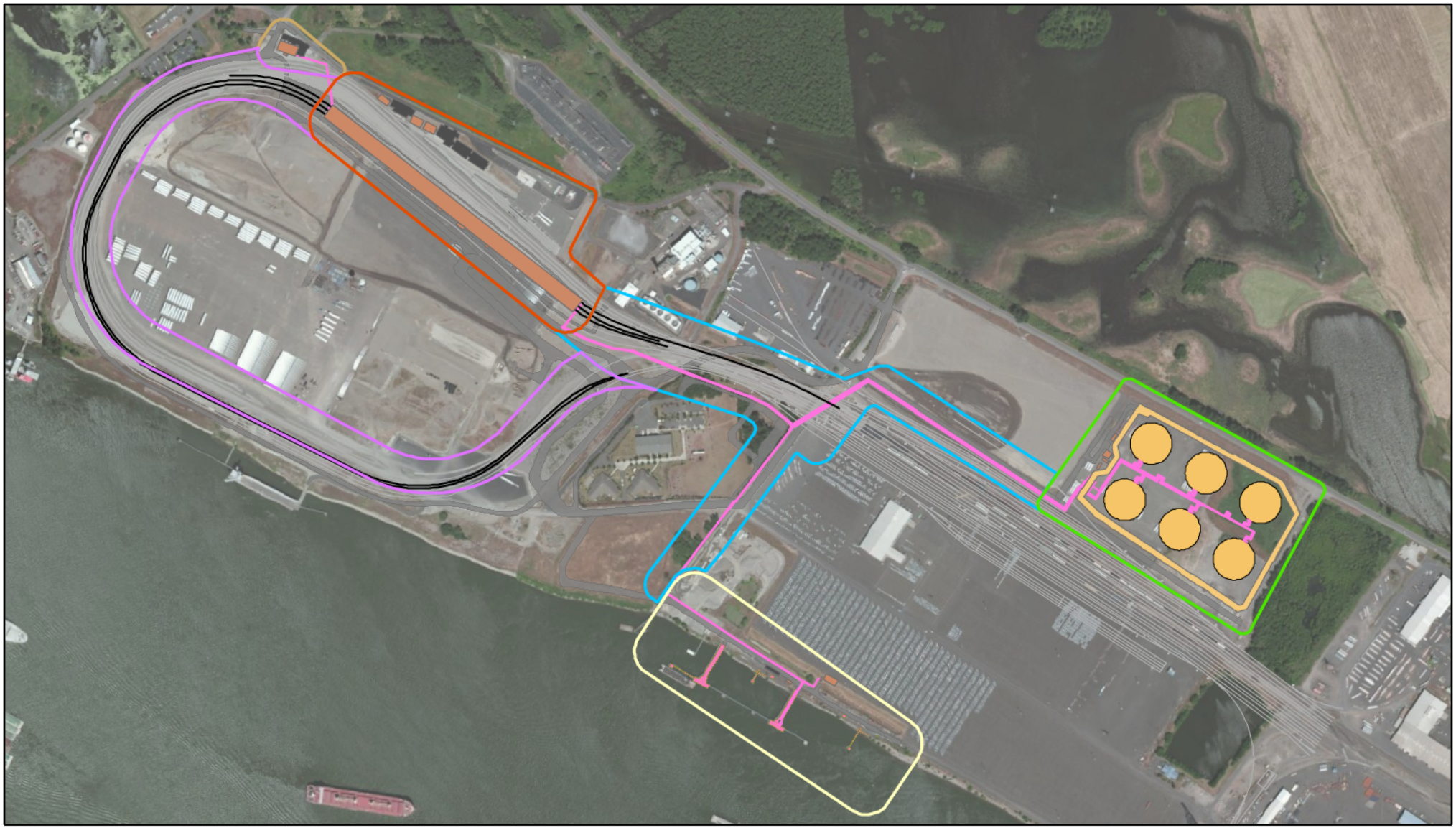

Figure 2 - Site Plan

VANCOUVER ENERGY

Tesoro Savage Petroleum Terminal LLC

Proposed Project Facilities

- Containment Berm
- Transfer Pipeline
- Rail
- Storage Tank
- Parking
- Roads
- Building
- Marine Terminal

TSPT Improvement Areas

- 200 - Unloading and Office
- 300 - Storage
- 400 - Marine Terminal
- 500 - Transfer Pipelines
- 600 - West Boiler
- Rail Infrastructure

0 250 500 1,000
Feet

N

Date: February 2015

Map Notes: Aerial photo dated July 2010, courtesy of ESRI World Imagery service

1.4 Existing Conditions

A thorough description of the existing conditions within and adjacent to the project area is included below. The existing condition descriptions are provided to delineate the geographic and natural resource elements of the Facility. Descriptions of the existing conditions include the following elements.

- Stormwater Conveyance and Treatment Systems
- Sanitary Sewer Conveyance and Treatment Systems
- Surface Water Bodies
- Floodplains
- Wetlands
- Soil Evaluations
- Past Site Remediation
- Climate

1.4.1 Stormwater Conveyance and Treatment Systems

The existing site is located in three distinct primary drainage areas which are segregated by topography. Stormwater within these areas discharges to different locations. Table 3 shows which areas of the Facility are located within each drainage area.

Table 3. Drainage and Facility Areas

Drainage Area	Facility Areas
Terminal 4	Area 300 – Storage Area 500 – Transfer Pipelines
Terminal 5	Area 200 – Unloading and Office Area 600 – West Boiler Rail Improvements
Marine Terminal	Area 400 – Marine Terminal Area 500 – Transfer Pipelines

For the purpose of this section, the three drainage areas are discussed separately. The corresponding figures indicate which area of the Facility is located within each drainage area and how the Facility area relates to the existing collection, treatment, and detention systems.

A detailed description of the three drainage areas (Terminal 4, Terminal 5, and the Marine Terminal) is provided in the following sections. The designations are intended to delineate the portion of the site described and its respective downstream drainage system. According to the port, the described Marine Terminal is technically part of Terminal 4; however, it has a distinct and separate stormwater system and, for that reason, is segregated as its own descriptive area.

1.4.1.1 Terminal 4

The Terminal 4 drainage system comprises approximately 250 acres of industrial land. A system of inlets and conveyance pipelines collects stormwater from the drainage area and discharges the stormwater to the Terminal 4 water quality pond, as shown in Figure 3. The water quality pond was modified recently to increase detention time and vegetative plantings were added for shading and bio-uptake. From the water quality pond, the stormwater is routed to the southeast where it is discharged through an existing outfall to the Columbia River under an Industrial Stormwater General Permit (WAR000424) held by the Port.

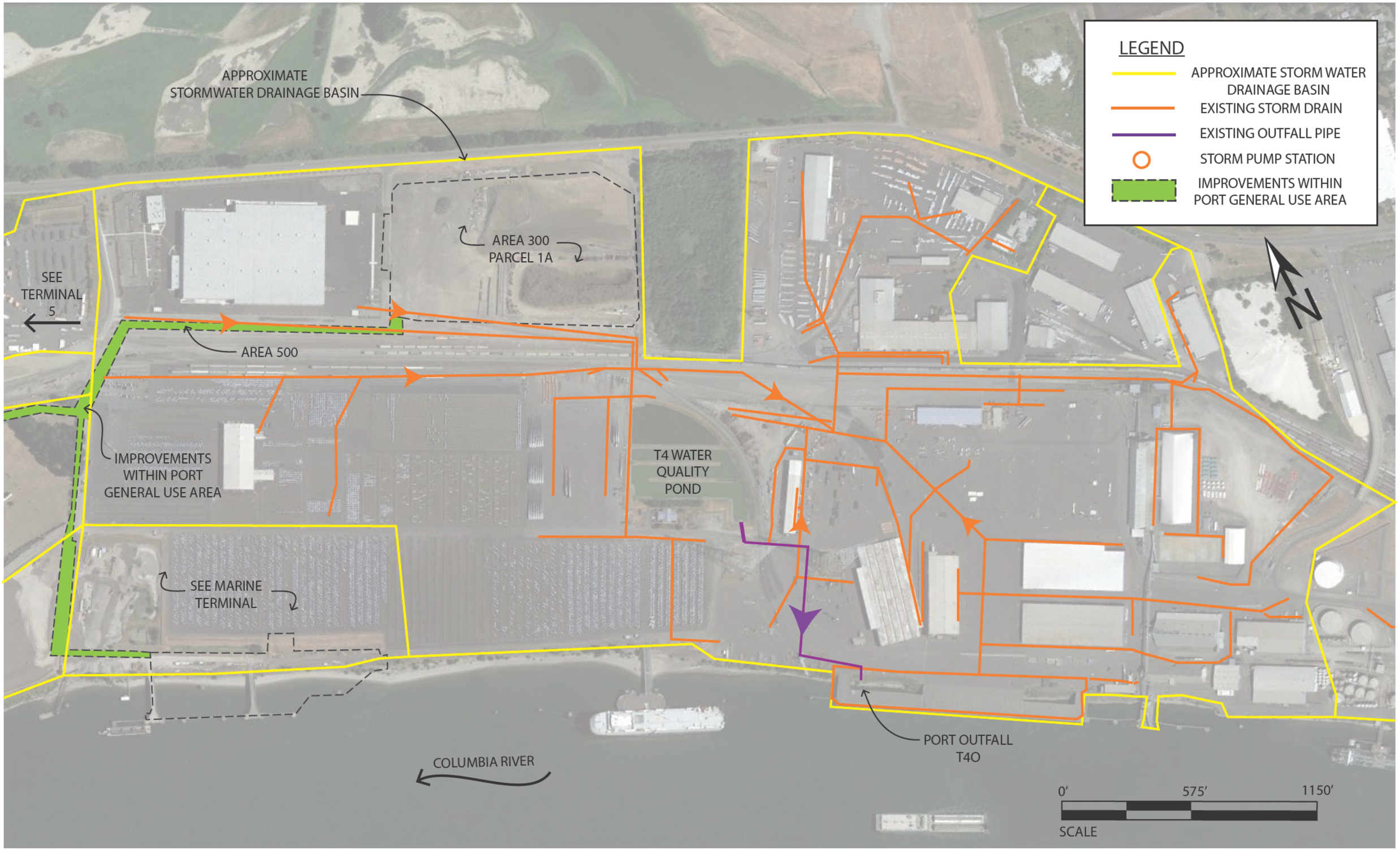
LEGEND
APPROXIMATE STORM WATER DRAINAGE BASIN
EXISTING STORM DRAIN
EXISTING OUTFALL PIPE
STORM PUMP STATION
IMPROVEMENTS WITHIN PORT GENERAL USE AREA
APPROXIMATE STORMWATER DRAINAGE BASIN
AREA 300 PARCEL 1A
SEE TERMINAL 5
AREA 500
IMPROVEMENTS WITHIN PORT GENERAL USE AREA
T4 WATER QUALITY POND
SEE MARINE TERMINAL
PORT OUTFALL T4O
COLUMBIA RIVER
N
0'
575'
1150'
SCALE

This page left blank intentionally.

Facility elements located within the Terminal 4 drainage area are Area 300 – Storage, and a portion of Area 500 – Transfer Pipelines. There are two parallel stormwater systems running east-west along the south side of Area 300 and the portion of Area 500. The southern pipeline was installed for stormwater from the port's general use area and rail corridor. The northern pipeline was installed for the use of port tenants. Farwest Steel is the only current discharger into this system. Upon completion of the Facility, stormwater from Area 300 will be discharged into the northern pipeline. Area 500 is located within the general use area and runoff will continue to the port's stormwater system.

Both pipelines currently discharge to the Terminal 4 water quality pond. The northern pipeline will be modified to bypass the Terminal 4 water quality pond to separate tenant stormwater from Port stormwater. This project is currently being constructed and will occur prior to construction of the Facility. The bypass pipeline will reconnect to the existing outfall pipeline to the Columbia River.

1.4.1.2 Terminal 5

The Terminal 5 drainage system was installed as part of the remediation and decommissioning of the former Evergreen/ALCOA aluminum smelter, construction of the West Vancouver Freight Access (WVFA) project, and the Terminal 5 laydown project. The drainage system was designed and analyzed as part of the analysis for the construction of the WVFA project. A copy of the report is attached in Appendix D.

The Terminal 5 drainage area consists of approximately 91 acres of industrial land that is collected through inlets and conveyed to a common stormwater pump station as shown in Figure 4. During normal operations, stormwater from the drainage area is pumped to two treatment lagoons that were installed to treat both process water and stormwater from the Evergreen/ALCOA plant. The treatment lagoons are capable of providing final treatment of stormwater prior to discharge to the Columbia River through an existing outfall under a Western Washington Phase II Municipal Stormwater Permit WAR045201 held by the Port. The stormwater system includes provision for a high flow or pump station failure to overflow to the Columbia River.

On the Facility site, three legs of the existing stormwater system run north/south through the proposed rail unloading facility. The west lateral extends towards Old Lower River Road for future use, the middle lateral collects runoff from atop the Vanexco Cap, and the east lateral collects stormwater from a portion of Old Lower River Road and the NGL Supply propane terminal. The middle lateral only conveys stormwater that collects from a liner system installed above the contaminated material; stormwater from this area is only exposed to existing general use industrial yard areas and a portion of the rail transportation corridor. The Facility areas constructed on Terminal 5 include Area 200, Area 600, and a portion of Area 500.

This page left blank intentionally.

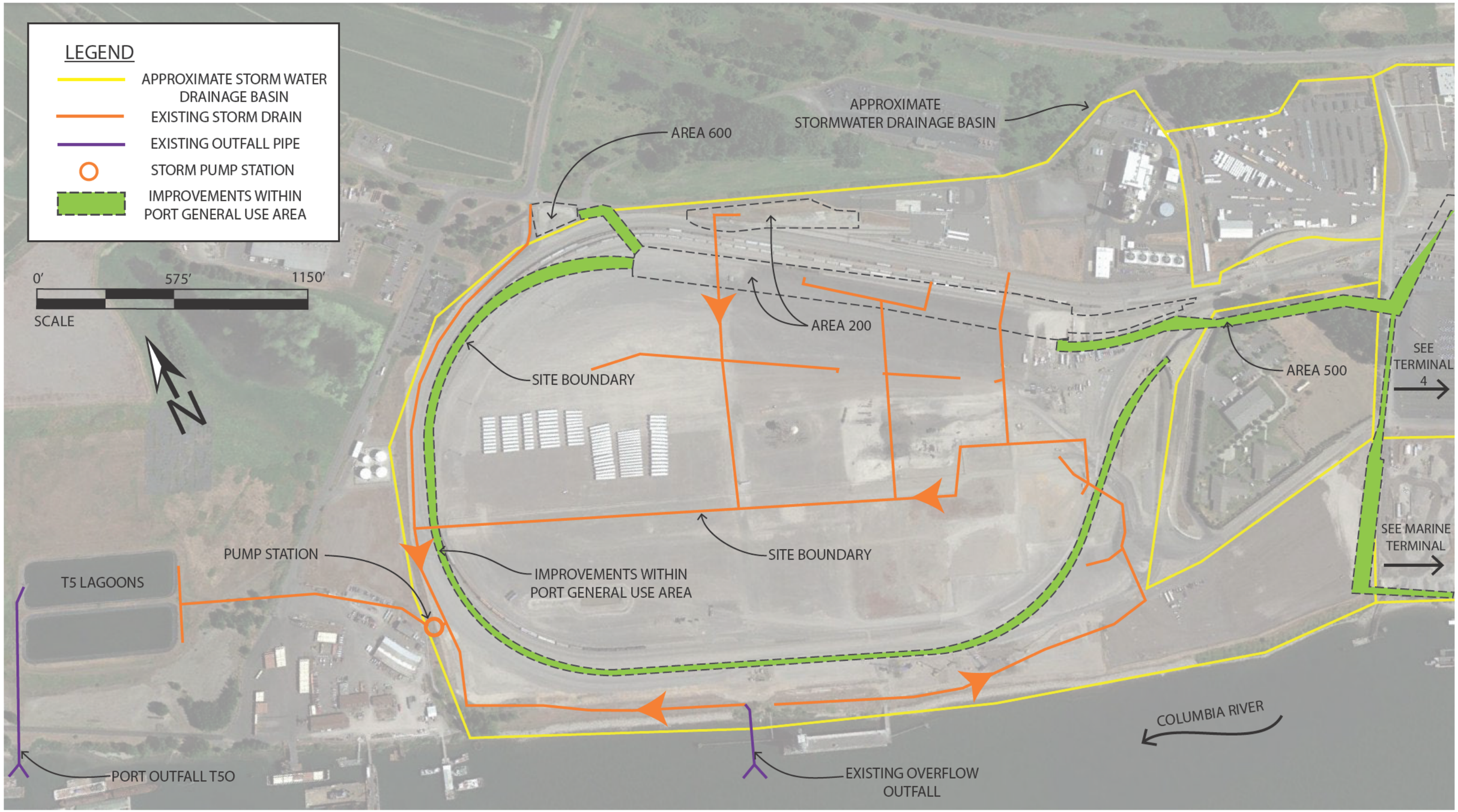
LEGEND
APPROXIMATE STORM WATER DRAINAGE BASIN
EXISTING STORM DRAIN
EXISTING OUTFALL PIPE
STORM PUMP STATION
IMPROVEMENTS WITHIN PORT GENERAL USE AREA
0'
575'
1150'
SCALE
N
AREA 600
APPROXIMATE STORMWATER DRAINAGE BASIN
AREA 200
SITE BOUNDARY
AREA 500
SEE TERMINAL 4
SITE BOUNDARY
SEE MARINE TERMINAL
PUMP STATION
IMPROVEMENTS WITHIN PORT GENERAL USE AREA
T5 LAGOONS
COLUMBIA RIVER
PORT OUTFALL T5O
EXISTING OVERFLOW OUTFALL

This page left blank intentionally.

1.4.1.3 Marine Terminal

The Marine Terminal is located within Terminal 4, however, stormwater in this area is a separate stormwater system. The system was installed with Phase I of the Columbia Gateway project in 1995. The stormwater serves three tenant areas including a gravel barge unloading operated by CalPortland/Glacier Northwest, an Auto Terminal consisting of first point of rest unloading and service facility for Subaru, and the proposed Facility infrastructure for the Marine Terminal. In total, the drainage area consists of approximately 25 acres. Stormwater is collected through a series of inlets and conveyance pipes from which it is discharged to the treatment and infiltration swales except for the existing Area 400 - Marine Terminal area, which sheet flows directly into the infiltration swales.

Stormwater is diverted to a number of biofiltration swales for basic water quality treatment and then flows into two hydraulically connected infiltration swales. Figure 5 shows the general arrangement of the collection and treatment facilities located at the Marine Terminal.

Modifications to the existing collection and treatment systems will occur within the Marine Terminal drainage area. A detailed explanation of modifications to the existing system is included in section 7.2.3.

1.4.2 Sewer Conveyance and Treatment Systems

The existing facility is located such that there are three distinct sewer service areas. The sewer conveyance systems, which are owned and operated by the City of Vancouver, direct flows to a pump station located immediately southeast of the corner of Area 300.

For the purpose of this section, each of the facility areas and the existing sewer connection description is provided below.

1.4.2.1 Area 200 Unloading and Office

Domestic wastewater generated by the employees and visitors will be generated at the administration area of Area 200. Employees working in other areas of the facility will also use the shower/change room facilities located here. Boiler blowdown (process wastewater) from Area 600 will be pumped to this area for on-site oil-water separation and discharge to the sewer. This process wastewater and domestic sewage from the administration and change/room will be commingled at a monitoring manhole and discharged to the City's system.

The proposed service lateral will connect to the City's gravity sewer located on Old NW Lower River Road. Manhole #21025 is the headwaters of this 18-inch gravity line that flows to the southeast. The manhole also receives discharges from a private 6-inch high-density polyethylene (HDPE) forcemain that was installed by the Port for future Terminal 5 tenants. The 18-inch gravity sewer line was constructed in 2010 with the original Port of Vancouver Terminal 5 Industrial Improvements.

1.4.2.2 Area 300 Storage

The primary source of sanitary sewer in Area 300 is contributed by a sump drain installed within the transfer pump basin. This drain includes a normally closed valve and oil-water separator for treatment prior to release to the City's system. The 3,200-square-foot basin will contribute regular flow to the City's system resulting from directly contributing rainfall.

The lateral from Area 300 will connect to the City's gravity sewer located immediately south of Area 300 and north of the rail corridor. This sewer was constructed in 2012 concurrently with the Port of Vancouver's West Vancouver Freight Access Project #9. This 18-inch gravity sewer line extends west and is part of the same system that connects to Area 200. It eventually discharges east to the City's pump station located southeast of Area 300.

Provisions are included in the design for future sanitary sewer connection for a possible restroom to be constructed within the storage building. A private sanitary sewer lateral is proposed to be stubbed to the building for possible future domestic sewage use.

This page left blank intentionally.

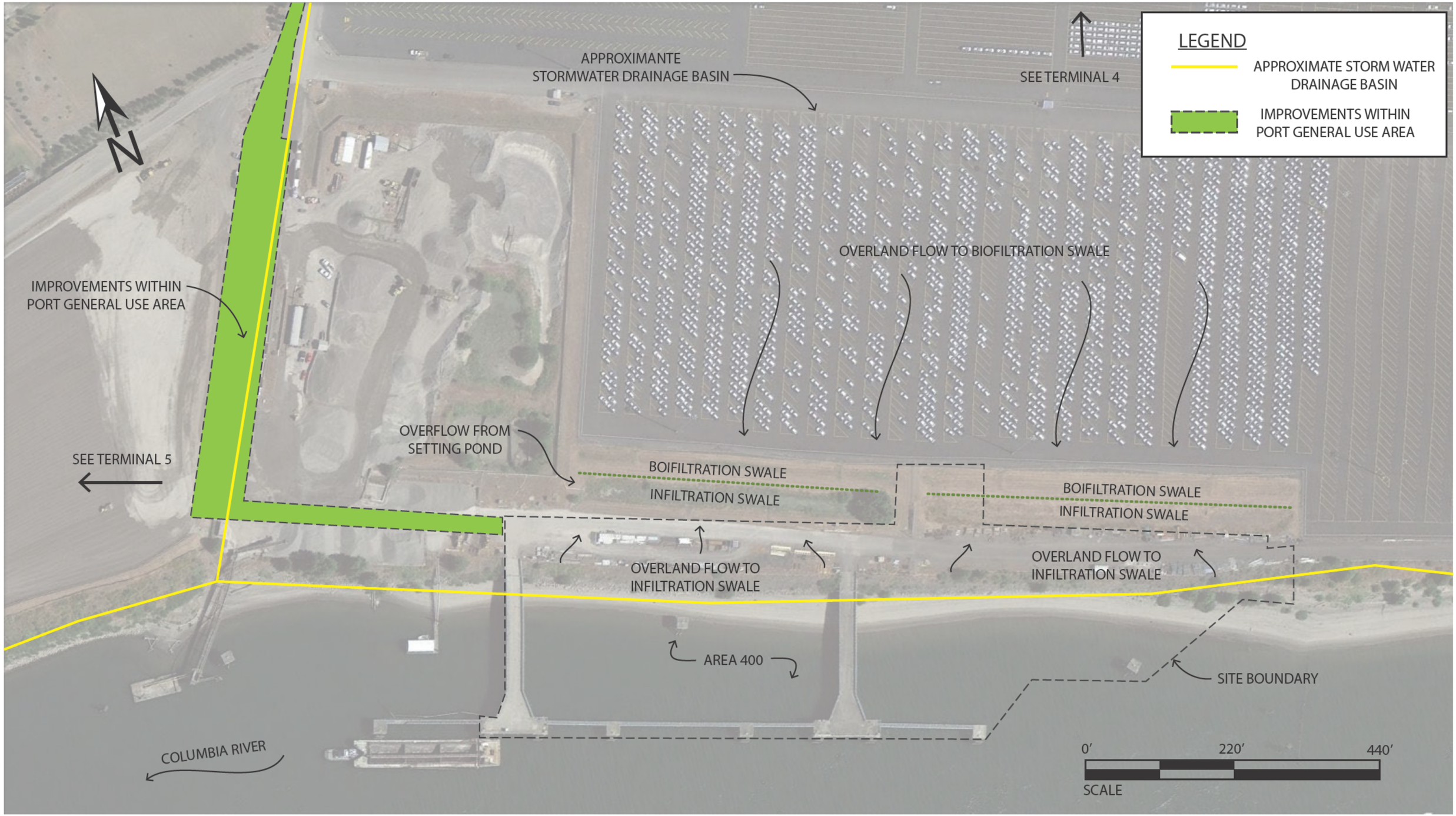
LEGEND
APPROXIMATE STORM WATER DRAINAGE BASIN
IMPROVEMENTS WITHIN PORT GENERAL USE AREA
N
APPROXIMANTE STORMWATER DRAINAGE BASIN
SEE TERMINAL 4
OVERLAND FLOW TO BIOFILTRATION SWALE
IMPROVEMENTS WITHIN PORT GENERAL USE AREA
OVERFLOW FROM SETTING POND
SEE TERMINAL 5
BOIFILTRATION SWALE
INFILTRATION SWALE
BOIFILTRATION SWALE
INFILTRATION SWALE
OVERLAND FLOW TO INFILTRATION SWALE
OVERLAND FLOW TO INFILTRATION SWALE
AREA 400
SITE BOUNDARY
COLUMBIA RIVER
0'
220'
440'
SCALE

This page left blank intentionally.

1.4.2.3 Area 400 Marine Terminal

Area 400 includes a control building for use during the loading of Marine Vessels. The facility as designed is planning to use portable restrooms for employee use. No connection to sanitary sewer is proposed from this area.

The nearest public gravity sewer is located north of the site at the intersection of Gateway Avenue and Harborside Drive. The existing manhole (#14411) received private pressure sewer from the west. The gravity sewer flows southeast within an existing public sewer easement. This sewer was constructed in 1999 with the Clark County Jail Work Center.

1.4.2.4 Area 500 Transfer Pipelines

There are no features that generate wastewater.

1.4.2.5 Area 600 West Boiler

Area 600 contributes process wastewater consisting of boiler blowdown. Boiler blowdown will be temperature treated using a heat exchanger and chemical neutralization if needed. Effluent monitoring will be completed in accordance with discharge permit requirements to demonstrate compliance with the City's pretreatment standards. A downstream oil-water separator is also included in the design prior to discharge. Process wastewater from this area is discharged to the gravity sewer described in Area 200 above.

1.4.2.6 Treatment

Sewer flows generated by the Facility will flow approximately 1 mile to the City's Westside Water Reclamation Facility through the City's existing collection system. The estimated total flow from the project to the treatment facility is approximately 24,000 gallons per day (gpd) average with a maximum of 36,000 gpd. According to the sewer availability letter provided by the City, "The existing gravity pipes, pump station and reclamation facilities have adequate hydraulic and treatment capacity to accommodate these requested flows." A copy of the sewer availability letter is provided in Appendix M.

1.4.3 Surface Water Bodies

The project site is located immediately north of the Columbia River and portions of the project site are bordered by wetlands. A discussion of the wetlands follows in section 1.4.5. No streams or open surface water features are located within the areas of the site development.

The project site is located within the Salmon-Washougal Watershed (WRIA 28) located in southwest Washington. The nearest surface water feature is the Columbia River. The river drains an estimated basin of roughly 258,000 square miles and is approximately 1,243 miles long. The project site is located at approximately RM 104. The Columbia River eventually discharges to the Pacific Ocean near Astoria, Oregon.

A description of the water quality of the Columbia River is included in section 11.2.

The average water level in the Columbia River is usually 7 to 8 feet (National Geodetic Vertical Datum [NGVD] 29) during the winter. Flood stage is considered to occur at 16 feet when low level flooding begins to occur. A detailed discussion of the floodplain limits follows as section 1.4.4. The flood of record is a 1996 event when the river crested at 27.2 feet. This is not the highest recorded event, which occurred on 13 June 1948 with a crest of 31.00 feet.

1.4.4 Floodplains

The local floodplain within the project vicinity is defined by the Columbia River. This lower portion of the Columbia River is generally regulated by the upstream Bonneville Dam. Flooding in and adjacent to the site from the north watershed, including Vancouver Lake, is hydraulically connected directly to the elevation of the water surface of the Columbia River.

This site area has been extensively studied for floodplain and flood impacts. The most recent analysis conducted by the Federal Emergency Management Agency (FEMA) developed Flood Insurance Rate Maps (FIRM) issued on 5 September 2012. The base flood elevation and limits are shown on the FIRM maps contained in Appendix B. The FEMA FIRMs that cover the project site are Map Item ID Nos. 53011C0363D and 553011C0364D.

Table 4 summarizes the floodplain elevations discussed below in the different vertical datums. National American Vertical Datum (NAVD) 88 is the vertical datum used by FEMA in the FIRM mapping, while NGVD 1929 is the datum used by the Port and the Facility. The NGVD 1929 datum is also the datum referenced in the historical flood record maintained by Clark County. The Columbia River Datum (CRD) is used by river users and is based on relative elevations to water levels.

Table 4. Floodplains

Floodplain	NAVD 88	NGVD 1929	CRD
100-Year	30.0	26.9	25.3
500-Year	33.7	30.6	29.0

1.4.4.1 100-Year Floodplain

The Base Flood Elevation (BFE) is identified in the FIRM for the 100-year floodplain as 30 feet based on the NAVD 88 datum. The limits of the 100-year floodplain are classified in the FIRMs as Zone AE, which indicates that there is a 1 percent annual chance flood, with the BFE being the water surface elevation of the 1 percent annual chance flood.

The 100-year floodplain is generally located along the top of the river bank. The FIRMs show an isolated component of the 100-year floodplain encroaching into Area 300 on Terminal 4, and Area 600 at Terminal 5. The 2012 FIRM maps do not reflect the grading and filling of these sites that occurred prior to the adoption of the FIRMs. Because of prior filling and grading completed by the Port, the existing ground elevation is outside of the 100-year floodplain at approximately Elevation 32 NGVD 1929. A detailed description of the prior authorizations for filling this area is included in the ASC.

1.4.4.2 500-Year Floodplain

The 500-year floodplain is identified in the FIRM as Zone X with the black dotted hatch pattern. Zone X is an area with a 0.2 percent annual chance flood. The 0.2 percent annual chance flood is listed with average depth of less than 1 foot.

With very little exception, the 500-year floodplain extends across the entire project site. The rough grading completed since the adoption of the 2012 FIRMs does not affect the limits of the 500-year floodplain.

1.4.5 Wetlands

The National Wetland Inventory map for Vancouver (U.S. Fish and Wildlife Service 1989) indicates the presence of numerous wetlands within the project vicinity. Before development, nine wetlands, totaling approximately 16 acres in size, were present on this site, but they were all filled through permitted actions that began in 1996.

There are two wetland mitigation sites in the vicinity of the project site. The approximately 7.9-acre Parcel 1A (east of Area 300) wetland mitigation site, located immediately east of Area 300, was established in 1994. This is a depressional, palustrine forested wetland vegetated with mature black cottonwood trees and a variety of native shrubs and herbaceous species. Stormwater from Area 300 or Area 500 will not discharge to any existing wetlands. The wetlands are not hydraulically connected to any of the project elements.

A second wetland mitigation site is an approximately 16.4-acre mitigation site situated immediately north of the existing Terminal 5 site. The wetland was established in 2000 for impacts associated with the initial development of Parcel 1A. The site is currently a mosaic of forested, scrub-shrub, and emergent vegetation. Stormwater from the Facility will not discharge to Parcel 2 wetlands.

The most significant complex of wetlands in the general vicinity is associated with the southern end of Vancouver Lake. The wetlands in this area are a mosaic of emergent, scrub-shrub, and forested wetlands that are hydraulically connected to Vancouver Lake and, by extension, the Columbia River. These wetlands provide high quality seasonally inundated and tidally influenced habitats that most closely resemble the original hydrologic and wetland habitat functions of the Vancouver Lake Lowlands.

1.4.6 Soils Evaluation

Geotechnical Resources, Inc. (GRI) performed a geotechnical investigations for the proposed Facility. The geotechnical investigations are attached as Appendix I. Detailed soil maps are included in Appendix I.

1.4.7 Past Site Remediation

Terminal 5 is the former location of the Evergreen/ALCOA aluminum smelter, which operated until 2000. Industrial and solid wastes from the construction and operation of the aluminum smelter were stored in waste piles and consolidated in landfills on site over the years. Hazardous contaminants in these wastes include petroleum hydrocarbons, polychlorinated biphenyls (PCBs), cyanide, fluoride, trichloroethylene (TCE), low-level organic chemicals, and metals. Evergreen and ALCOA completed site remediation and facility decommissioning under Consent Decree No. 09-2-00247-2 and Enforcement Order 4931 with Ecology. Efforts included removing structures and foundations to a depth of approximately 4 feet and the site soil and sediment with concentrations of chemicals of concern above the cleanup levels established by the consent decree.

Five cap locations subject to environmental restrictive covenants are located within the boundary of the Facility. The Terminal 5 area also includes a groundwater restrictive covenant. A contaminated media management plan (CMMP) has been prepared and submitted under separate cover containing detailed descriptions of the landfill areas, caps, and the contaminates of concern. These areas are shown in Figure 6.

Copyright © BergerABAM. All Rights Reserved.

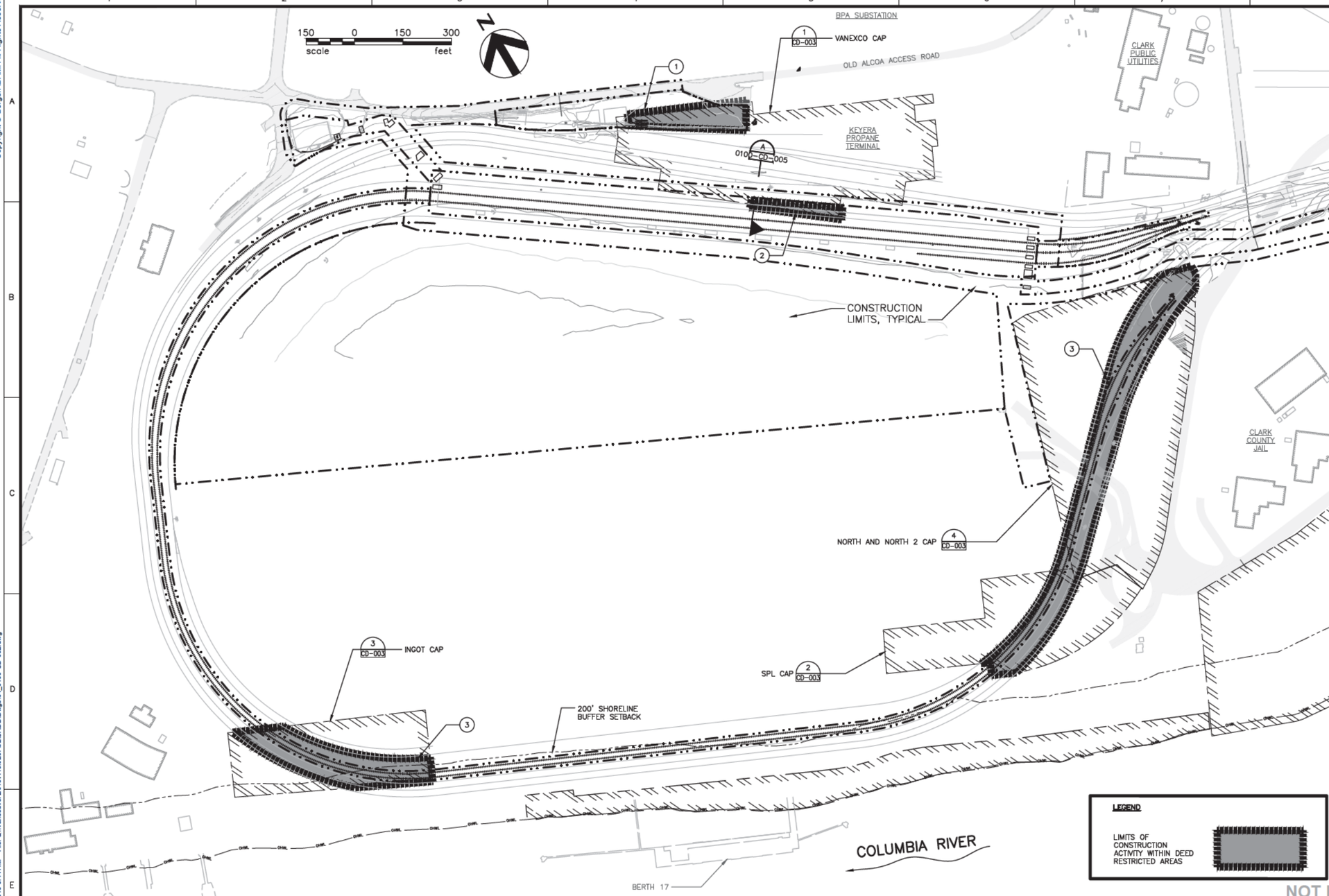

GENERAL NOTES:

1. CONTRACTOR'S ACTIVITY SHALL STRICTLY COMPLY WITH ALL PERMITTED CONDITIONS OF APPROVAL.
2. EXCAVATIONS AND GROUND DISTURBING ACTIVITIES WITH DEED RESTRICTED AREAS REQUIRES NOTIFICATION TO THE WASHINGTON DEPARTMENT OF ECOLOGY AND COMPLIANCE WITH PORT OF VANCOUVER PROTOCOLS AND ADDITIONAL REQUIREMENTS PROVIDED BY THE WA DEPARTMENT OF ECOLOGY.
3. SPECIFIC LIMITS FOR THE EAST LANDFILL LIMITS ARE PROVIDED BASED UPON PRIOR SURVEY'S CONDUCTED BY HDJ DESIGN GROUP. WORK LIMIT SHALL ENCROACH UPON THE BOUNDARY OF THE EAST LANDFILL.
4. WHERE KNOWN, ADDITIONAL AREAS OF CONCERN AND POSSIBLE CONTAMINATED MEDIA LOCATIONS HAVE BEEN GENERALLY DEPICTED. CONTRACTOR SHALL COORDINATE FULLY WITH PORT OF VANCOUVER ENVIRONMENTAL STAFF AND INSPECTORS FOR MONITORING AND TESTING OF EXCAVATED MEDIA FOR POSSIBLE CONTAMINATES. PORTIONS OF AREA 200 AND AREA 500 ARE SPECIFICALLY IDENTIFIED WHERE CONTAMINATION IS LIKELY TO BE ENCOUNTERED DURING EXCAVATIONS.
5. IF MEDIA INCLUDING SOILS, OR GROUNDWATER ARE ENCOUNTERED THAT INDICATE POSSIBLE CONTAMINATION, CONTRACTOR SHALL NOTIFY PORT OF VANCOUVER IMMEDIATELY PRIOR TO PROCEEDING. SIGNS OF CONTAMINATION INCLUDE UNUSUALLY DARK SOIL AND ODORS.
6. IN AREAS OF CONCERN EXCAVATED MATERIAL SHALL BE PLACED IN SEALED WATER-TIGHT CONTAINERS OR LINED STAGING AREAS IMMEDIATELY ADJACENT TO THE WORK AREA FOR TESTING AND CLASSIFICATION OF MATERIAL PRIOR TO HAUL OFF.

CONTAMINATED MEDIA NOTES:

1. CONSTRUCTION ACTIVITIES WITHIN THIS PORTION OF THE VANEXCO CAP WILL BE LIMITED TO GROUND DISTURBANCES ABOVE THE EXISTING CONCRETE CAP. SOME MINOR EXPOSURE OF THE CONCRETE SURFACE MAY OCCUR IN LOCALIZED AREAS. NO WORK WITHIN THIS AREA WILL REMOVE OR PENETRATE PORTIONS OF THE CAP.
2. CONSTRUCTION ACTIVITIES WITHIN THIS PORTION OF THE VANEXCO CAP WILL RESULT IN MODIFICATION OF THE UNDERDRAIN SYSTEM AND HDPE LINER. DISCHARGES FROM THE UNDERDRAIN SYSTEM WILL BE RE-ROUTED TO AVOID CONFLICTS WITH THE PROPOSED RAIL UNLOADING BUILDING FOUNDATIONS AND CONTAINMENT TRENCHES, SEE DWG 0100-CD-003 FOR LINER PENETRATION DETAIL, AND SHEETS 0100-CD-007 & 0100-CD-008 FOR NEW STORMWATER DETAILS. LINER WILL BE EXTENDED TO AND TIED INTO THE GRADE BEAMS OF THE RAIL UNLOADING BUILDING FOUNDATION SEE DWG 0100-CD-003 FOR DETAILS. FOUNDATIONS OF THE RAIL UNLOADING BUILDING WITHIN THE EXISTING CAP AREA WILL BE LIMITED TO SHALLOW SPREAD FOOTINGS TO LIMIT EXCAVATION ACTIVITIES. CONSTRUCTION OF RAIL UNLOADING BUILDING CONSISTS OF FULLY IMPERVIOUS ROOF WITH CAST-IN-PLACE CONCRETE SURFACING WITH FLOOR DRAINS. ALL RAINWATER WILL BE COLLECTED AND DIVERTED, THEREBY EXCLUDING SURFACE WATER FROM ENTERING CAP AREA.
3. CONSTRUCTION WITHIN THE INGOT CAP, SPL CAP, AND NORTH AND NORTH 2 CAP AREAS ARE LIMITED TO RAIL IMPROVEMENTS ONLY. RAIL LINES TO BE UNDER TSJV CONTROL ARE PERMITTED UNDER EFSEC APPLICATION. CONSTRUCTION DRAWINGS, DETAILS, AND CONSTRUCTION ADMINISTRATION FOR THESE IMPROVEMENTS WILL BE COMPLETED BY THE PORT OF VANCOUVER AS DISCUSSED IN THE LEASE AGREEMENT AS PART OF THE PORTS WEST VANCOUVER FREIGHT ACCESS PROJECT.
4. CONSTRUCTION WITHIN THE EAST LANDFILL CAP AREA CONSISTS OF GRADING A SUITABLE LEVEL BENCH WITHIN THE DEED RESTRICTED AREA TO CONSTRUCT FOUNDATIONS FOR THE CRUDE OIL PIPELINE. CONSTRUCTION ACTIVITIES SHALL NOT ENCROACH UPON THE LANDFILL AREA ITSELF AND SHALL REMAIN EAST OF THE HIGH VISIBILITY FENCING DELINEATED ON THE EROSION CONTROL PLANS.
5. PORT OF VANCOUVER IDENTIFIED POCKETS OF CONTAMINATED GROUNDWATER AND SOIL WITHIN THIS AREA. CONTRACTOR SHALL BE ADVISED THAT WORK WITHIN THIS PORTION OF THE PIPELINE ALIGNMENT WILL REQUIRE TESTING OF EXCAVATED MATERIAL PRIOR TO DISPOSAL.

PERMIT SET
NOT FOR CONSTRUCTION

NO.	DATE	REVISION	BY	CK'D	APP

BergerABAM
700 NE Multnomah Street, Suite 900
Portland, Oregon 97232-4189
(503) 872-4100 FAX: (503) 872-4101

VANCOUVER ENERGY
Tesoro Savage Petroleum Terminal LLC

PROJECT: VANCOUVER ENERGY
PORT OF VANCOUVER, WASHINGTON

DESCRIPTION: CONTAMINATED MEDIA LOCATIONS – 1

DESIGN:	DRS	START DATE:	2/6/2015	SCALE:	AS SHOWN
DRAWN:	TNP	PRINT DATE:	2/6/2015	PROJECT MANAGER:	SAVAGE_PM
CHECKED:	MCH	APPROVED:	SA	SIZE:	24X36

DRAWING NUMBER: 0100-CD-002
SHEET: 1/1
REV.

Last Saved by: Tony.pritchett on: Feb 6, 2015 8:44 AM File: Q:\Vancouver\2013\A13.0267\02\CAD\Dwgs\04_0100-CD-002.dwg

This page left blank intentionally.

Copyright © BergerABAM. All Rights Reserved.

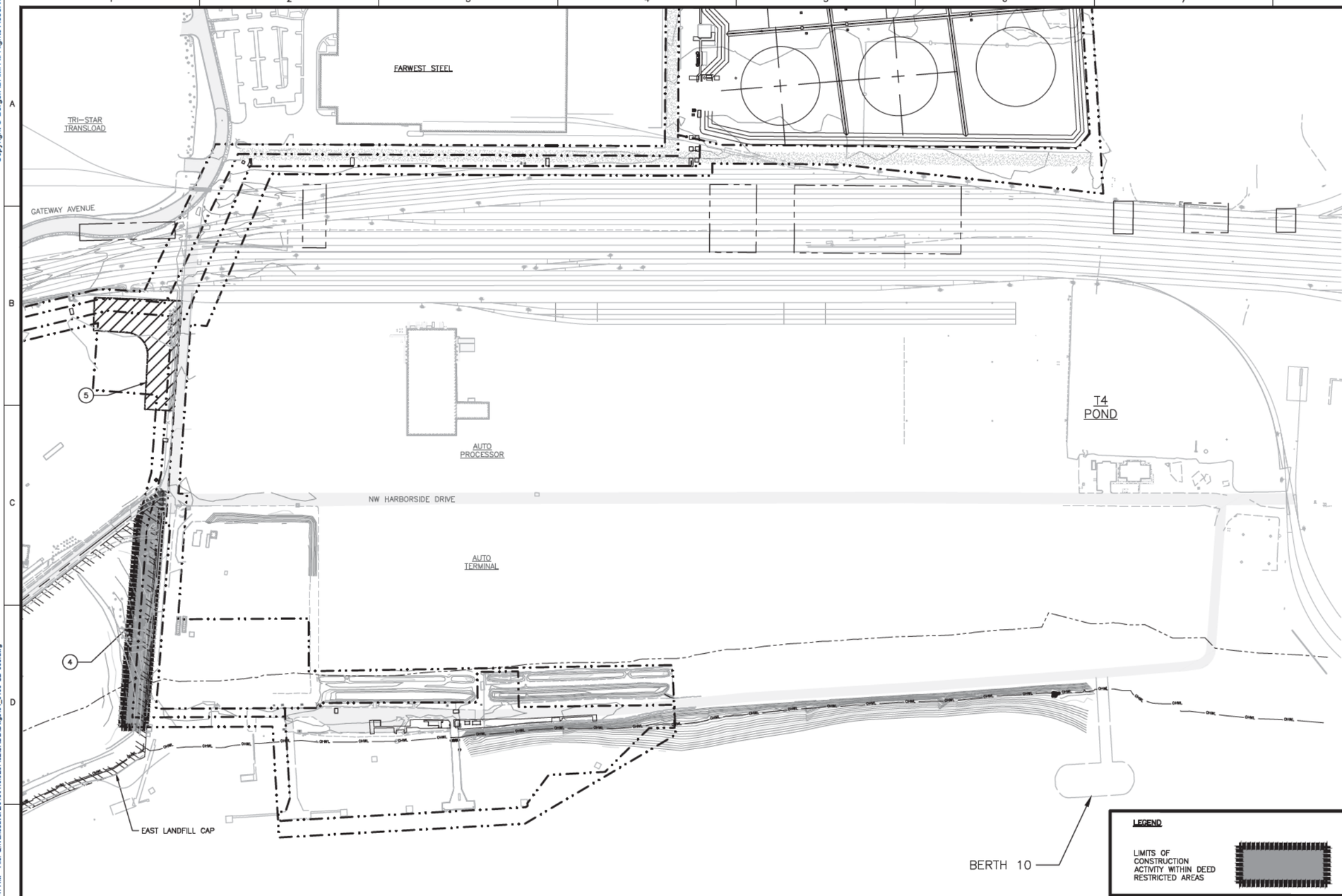

GENERAL NOTES:

1. CONTRACTOR'S ACTIVITY SHALL STRICTLY COMPLY WITH ALL PERMITTED CONDITIONS OF APPROVAL.
2. EXCAVATIONS AND GROUND DISTURBING ACTIVITIES WITH DEED RESTRICTED AREAS REQUIRES NOTIFICATION TO THE WASHINGTON DEPARTMENT OF ECOLOGY AND COMPLIANCE WITH PORT OF VANCOUVER PROTOCOLS AND ADDITIONAL REQUIREMENTS PROVIDED BY THE WA DEPARTMENT OF ECOLOGY.
3. SPECIFIC LIMITS FOR THE EAST LANDFILL LIMITS ARE PROVIDED BASED UPON PRIOR SURVEY'S CONDUCTED BY HDJ DESIGN GROUP. WORK LIMIT SHALL ENCROACH UPON THE BOUNDARY OF THE EAST LANDFILL.
4. WHERE KNOWN, ADDITIONAL AREAS OF CONCERN AND POSSIBLE CONTAMINATED MEDIA LOCATIONS HAVE BEEN GENERALLY DEPICTED. CONTRACTOR SHALL COORDINATE FULLY WITH PORT OF VANCOUVER ENVIRONMENTAL STAFF AND INSPECTORS FOR MONITORING AND TESTING OF EXCAVATED MEDIA FOR POSSIBLE CONTAMINATES. PORTIONS OF AREA 200 AND AREA 500 ARE SPECIFICALLY IDENTIFIED WHERE CONTAMINATION IS LIKELY TO BE ENCOUNTERED DURING EXCAVATIONS.
5. IF MEDIA INCLUDING SOILS, OR GROUNDWATER ARE ENCOUNTERED THAT INDICATE POSSIBLE CONTAMINATION, CONTRACTOR SHALL NOTIFY PORT OF VANCOUVER IMMEDIATELY PRIOR TO PROCEEDING. SIGNS OF CONTAMINATION INCLUDE UNUSUALLY DARK SOIL AND ODORS.
6. IN AREAS OF CONCERN EXCAVATED MATERIAL SHALL BE PLACED IN SEALED WATER-TIGHT CONTAINERS OR LINED STAGING AREAS IMMEDIATELY ADJACENT TO THE WORK AREA FOR TESTING AND CLASSIFICATION OF MATERIAL PRIOR TO HAUL OFF.

CONTAMINATED MEDIA NOTES:

1. CONSTRUCTION ACTIVITIES WITHIN THIS PORTION OF THE VANEXCO CAP WILL BE LIMITED TO GROUND DISTURBANCES ABOVE THE EXISTING CONCRETE CAP. SOME MINOR EXPOSURE OF THE CONCRETE SURFACE MAY OCCUR IN LOCALIZED AREAS. NO WORK WITHIN THIS AREA WILL REMOVE OR PENETRATE PORTIONS OF THE CAP.

2. CONSTRUCTION ACTIVITIES WITHIN THIS PORTION OF THE VANEXCO CAP WILL RESULT IN MODIFICATION OF THE UNDERDRAIN SYSTEM AND HDPE LINER. DISCHARGES FROM THE UNDERDRAIN SYSTEM WILL BE RE-ROUTED TO AVOID CONFLICTS WITH THE PROPOSED RAIL UNLOADING BUILDING FOUNDATIONS AND CONTAINMENT TRENCHES, SEE DWG 0100-CD-003 FOR LINER PENETRATION DETAIL, AND SHEETS 0100-CD-007 & 0100-CD-008 FOR NEW STORMWATER DETAILS. LINER WILL BE EXTENDED TO AND TIED INTO THE GRADE BEAMS OF THE RAIL UNLOADING BUILDING FOUNDATION SEE DWG 0100-CD-003 FOR DETAILS. FOUNDATIONS OF THE RAIL UNLOADING BUILDING WITHIN THE EXISTING CAP AREA WILL BE LIMITED TO SHALLOW SPREAD FOOTINGS TO LIMIT EXCAVATION ACTIVITIES. CONSTRUCTION OF RAIL UNLOADING BUILDING CONSISTS OF FULLY IMPERVIOUS ROOF WITH CAST-IN-PLACE CONCRETE SURFACING WITH FLOOR DRAINS. ALL RAINWATER WILL BE COLLECTED AND DIVERTED, THEREBY EXCLUDING SURFACE WATER FROM ENTERING CAP AREA.

3. CONSTRUCTION WITHIN THE INGOT CAP, SPL CAP, AND NORTH AND NORTH 2 CAP AREAS ARE LIMITED TO RAIL IMPROVEMENTS ONLY. RAIL LINES TO BE UNDER TSJV CONTROL ARE PERMITTED UNDER EFSEC APPLICATION. CONSTRUCTION DRAWINGS, DETAILS, AND CONSTRUCTION ADMINISTRATION FOR THESE IMPROVEMENTS WILL BE COMPLETED BY THE PORT OF VANCOUVER AS DISCUSSED IN THE LEASE AGREEMENT AS PART OF THE PORTS WEST VANCOUVER FREIGHT ACCESS PROJECT.

4. CONSTRUCTION WITHIN THE EAST LANDFILL CAP AREA CONSISTS OF GRADING A SUITABLE LEVEL BENCH WITHIN THE DEED RESTRICTED AREA TO CONSTRUCT FOUNDATIONS FOR THE CRUDE OIL PIPELINE. CONSTRUCTION ACTIVITIES SHALL NOT ENCROACH UPON THE LANDFILL AREA ITSELF AND SHALL REMAIN EAST OF THE HIGH VISIBILITY FENCING DELINEATED ON THE EROSION CONTROL PLANS.

5. PORT OF VANCOUVER IDENTIFIED POCKETS OF CONTAMINATED GROUNDWATER AND SOIL WITHIN THIS AREA. CONTRACTOR SHALL BE ADVISED THAT WORK WITHIN THIS PORTION OF THE PIPELINE ALIGNMENT WILL REQUIRE TESTING OF EXCAVATED MATERIAL PRIOR TO DISPOSAL.

LEGEND

LIMITS OF CONSTRUCTION ACTIVITY WITHIN DEED RESTRICTED AREAS

PERMIT SET
NOT FOR CONSTRUCTION

NO.	DATE	REVISION	BY	CK'D	APP

BergerABAM
700 NE Multnomah Street, Suite 900
Portland, Oregon 97232-4189
(503) 872-4100 FAX: (503) 872-4101

VANCOUVER ENERGY
Tesoro Savage Petroleum Terminal LLC

PROJECT: VANCOUVER ENERGY
PORT OF VANCOUVER, WASHINGTON

DESCRIPTION: CONTAMINATED MEDIA LOCATIONS – 2

DESIGN:	DRS	START DATE:	2/6/2015	SCALE:	AS SHOWN
DRAWN:	TNP	PRINT DATE:	2/6/2015	PROJECT MANAGER:	SAVAGE_PM
CHECKED:	MCH	APPROVED:	SA	SIZE:	24X36

DRAWING NUMBER: 0100-CD-003
SHEET: 1/1
REV.

Last Saved by: Tony.pritchett on: Feb 6, 2015 8:47 AM File: Q:\Vancouver\2013\A13.0.267\02\CAD\Dwgs\04_0100-CD-003.dwg

This page left blank intentionally.

Operationally, the project will not impact the industrial waste areas. Construction of the Facility will require slight modifications to the Vanexco Cap liner system installed with the WVFA project. Additionally, rail improvements will be constructed on top of the North/North2, SPL, and Ingot caps. These construction impacts are discussed in detail in the Facility's construction SWPPP.

The Facility will reconstruct the downstream discharges connected to the Vanexco Cap liner system, and details of this construction are included in Area 200 (see section 5.2.2).

1.4.8 Climate

The climate of the city is predominantly temperate, characterized by wet, mild winters and dry warm summers. The climate is influenced by the relative proximity of the Pacific Ocean and the Cascade and Coast ranges of Oregon and Washington. Temperature and precipitation measurement records from the "Vancouver 4 NNE" agricultural meteorological station were accessed to analyze the climate at the project site. The station is located approximately 4 miles northeast of the project site and has been collecting measurements since 1856. The maximum temperature ever recorded at the site was 106°F on 30 July 2009 and minimum temperature recorded was -8.0°F in 1909. The site averages about 39.6 inches of rainfall and 6.5 inches of snow a year, with most of the precipitation occurring during the winter months. Prevailing winds are from the west-northwest.

Isopluvial mapping of Washington was prepared by the National Oceanic and Atmospheric Administration. Table 5 shows estimates of precipitation amounts for the following design storms as shown in Volume IX of the NOAA Atlas 2 and attached in Appendix A.

Table 5. Design Storm Rainfall Intensity

Design Storm	Precipitation (in)
2-Year, 24-Hour	2.4
5-Year, 24-Hour	2.7
10-Year, 24-Hour	3.2
25-Year, 24-Hour	3.6
50-Year, 24-Hour	4.0
100-Year, 24-Hour	4.3

Precipitation amounts shown in Table 5 are used in the conveyance system model which uses the SCS Type 1A rainfall distribution hydrograph to determine the peak flow rates for the design storm. The Western Washington Hydrology Model (WWHM) used catalogued map information that is automatically selected when the project site is selected. The gauge used in the WWHM is "Portland" with a precipitation factor of 0.933.

1.5 Project Overview

The project will construct a facility to receive crude oil by rail, store it on site, and load it on marine vessels for shipment to end users primarily located on the West Coast. Unit trains will arrive at the project site and be stationed on the Facility rail loops. The trains will be brought to the unloading area (Area 200) where the crude oil will be gravity-drained into the collection piping system, and pumped into the transfer pipeline system (Area 500). Crude oil will be pumped through the transfer pipelines to the storage tanks (Area 300) or directly to berthed vessels (Area 400). Marine vessels will arrive and moor at the dock (Area 400) where they will be preboomed. Crude oil will be pumped from the storage tanks or unloading building to the loading area, and loaded to marine vessels. A complete facility description is located within the ASC.

2. Type of Industry or Business

The proposed Facility is classified as a transload facility. The Facility will receive crude oil by rail, store it on site, and load marine vessels. The Standard Industrial Classification for the Facility is 5171 "Petroleum Bulk Station and Terminal" and the equivalent North American Industry Classification System code is 422710. The Facility will be staffed by approximately 176 employees and will operate 24 hours a day, 7 days a week, 365 days a year. The Facility will not conduct any processing or refining of crude oil.

3. Kind and Quantity of Product

The proposed Facility is designed to receive an average of 360,000 barrels (bbl) of crude oil per day. The Storage Area consists of six storage tanks designed with a shell volume of 380,000 bbl and an operational volume of 360,000 bbl. The Facility is conservatively designed to transfer a range of crude oils from API 15 to API 45. Sample Material Safety Data Sheets (MSDSs) for crude oil are attached in Appendix K. The Marine Terminal is designed to serve oceangoing vessels and articulated tug barges with an operational capacity of up to 500,000 bbl.

4. Project Summary

Sections 5 through 7 that follow discuss the collection, treatment, and discharge of operations-related stormwater by the Facility. Sections 8 and 9 discuss the collection treatment and discharge of domestic and process wastewaters from the Facility.

A stormwater runoff model was developed for the entire Facility located within the lease boundaries, including areas of the Facility within the non-exclusive lease areas in which stormwater is collected and treated by existing stormwater infrastructure. The runoff model for the entire site was developed using WWHM Version 3 and is located in Appendix E. The site-wide runoff results for the existing conditions and the constructed Facility are summarized in Table 6 below.

Table 6. Facility Site Stormwater Summary

	Pre-Construction	Completed Facility
Total Site Area	47.4 Acres	47.4 Acres
Percent Impervious	95.7 %	93.7 %
Disturbed Area	40.4 Acres	43.4 Acres
2-Year Peak Runoff	15.68 cfs	15.23 cfs
10-Year Peak Runoff	24.60 cfs	23.86 cfs
25-Year Peak Runoff	29.66 cfs	28.76 cfs
100-Year Peak Runoff	38.02 cfs	36.86 cfs

The Facility will generate approximately 24 gallons per minute (gpm) of process and domestic wastewater from several of its operations as discussed in detail in sections 8 and 9. Depending upon its source, process wastewater will be either collected, stored on site, and hauled to an approved disposal location; treated and discharged to stormwater; or pretreated and discharged to the City's sanitary sewer. All domestic wastewaters will be discharged to the City's sanitary sewer. A summary of the Facility's discharges are in Table 7 below.

Table 7. Facility Process Wastewater Discharge Summary

Wastewater Streams	Average Daily Flows (gpd)	Maximum Daily Flows (gpd)
Area 200		
Miscellaneous part/equipment wash	2,400[a]	5,000[a]
Fire pump cooling water	100[a]	200[a]
Area 300		
Pump basin sump effluent	100[b]	7,000[b]
Fire pump cooling water	100	200
Area 400 fire pump cooling water	100[a]	200[a]
Area 600 boiler building effluent	16,200	19,900
Total process wastewater	19,000	32,500
Total process wastewater to sanitary sewer	16,400	27,100

[a] Process waster discharged to stormwater system for treatment or stored on site and hauled off site for disposal.

[b] Waste flows from this basin are calculated assuming (at this time) that the basin is not covered. Average day flows were calculated distr buting the annual rainfall total of 38.9 inches per year to determine gpd. Maximum rainfall was calculated using the 100-year storm rainfall event of 4.5 inches per day.

Domestic wastewater will be generated from the administrative and support buildings in Area 200, the storage building in Area 300, and portable restrooms at Area 400. Domestic wastewater is primarily generated from kitchen/break room, restroom facilities, and shower areas. A summary of domestic sources is shown in Table 8 below. Domestic wastewater values were calculated using 35 gallons per day per employee plus approximately 10 percent for visitors, kitchen, inspectors, and maintenance staff.

Table 8. Domestic Wastewater Summary

Wastewater Streams	Average Daily Flows (gpd)	Maximum Daily Flows (gpd)
Area 200 administrative and support buildings	5,300	6,100
Area 300 storage building	500	750
Area 400 domestic use[b]	500[a]	750[a]
Total domestic wastewater	6,300	7,600
Domestic wastewater to sanitary sewer	5,800	5,350

[a] Domestic wastewater stored on site and hauled off site for disposal.

[b] Wastewater production at areas 300 and 400 increased over assumed employee concentrations of 4 and 10, respectively, to allow for staffing reallocation in the future.

5. Operational Quantity and Quality of Industrial Stormwater

This section summarizes the design of the permanent stormwater system, including a description of the contributing areas, collection, and conveyance system design. The treatment methodologies and treatment unit sizing are discussed in detail in section 7.

5.1 Flow Control Exemption

The Facility will discharge to existing Columbia River outfalls through existing manmade conveyance pipelines. This waterbody is categorically exempt from the flow control provisions of Ecology's *2012 Stormwater Management Manual for Western Washington*. According to Appendix I-E of the manual, the Columbia River is listed as a flow control-exempt water body. Redevelopment is proposed within the existing drainage areas of developed storm drain systems that discharge through manmade conveyances directly to the Columbia River.

Redevelopment of the existing brownfield Facility location will not result in the diversion of drainage from any perennial stream or from any category of wetland and will not discharge stormwater to streams or wetlands.

Stormwater will be collected on site, and stormwater exposed to pollution-generating surfaces will be treated. Where feasible, stormwater from roof areas considered to be non-pollution generating will be discharged directly to the existing stormwater systems. Project areas handling crude oil, specifically rail unloading building, and storage tank areas are equipped with additional structural controls for containment.

Stormwater from surface improvements will be collected through a series of inlets and storm drain systems, routed through on-site treatment, and discharged to existing on-site manmade pipelines. These pipelines continue through manmade conveyance and/or treatment systems before discharging through piped outfalls to the Columbia River. Area 400 – Marine Terminal will use constructed bio-infiltration swales to discharge stormwater. Due to the proximity of the swales to the Columbia River and groundwater, stormwater will be treated through media filter drains and stormfilter units.

The Port operates and maintains the downstream conveyance systems and treatment systems. There have been multiple projects to build and modify these systems over time. The most recent design reports available for the downstream conveyance systems are attached in Appendix D.

5.2 Stormwater Collection and Conveyance

5.2.1 Collection and Conveyance System Design Standards

The stormwater collection systems generally consists of catch basins, area inlets, gutters and storm drains located throughout the Facility areas. To the maximum extent practical, the site has been graded to drain gently towards the located inlets. Stormwater from pollution-generating surfaces will be directed to inlets and conveyance systems located upstream of water quality treatment units.

Portions of the transfer pipelines (Area 500) and Facility rail infrastructure will be located within non-exclusive lease areas, which are referred to in this report as general use areas. The Port has existing stormwater collection systems in these areas that manage industrial stormwater.

All Facility stormwater conveyance systems will have monitoring manholes constructed at all locations where the Facility's stormwater is discharged to the port's downstream systems. Monitoring in accordance with the NPDES Industrial Individual Permit is proposed only at locations where the Facility will contribute stormwater from pollution-generating surfaces. The Facility-proposed monitoring locations are shown on each area's stormwater plans and the locations are discussed in detail below.

The proposed conveyance systems are designed to handle the 25-year, 24-hour storm event. The design was also evaluated for the 100-year, 24-hour storm event to determine flooding potential during this extreme event. In general, pipe sizes and slopes were chosen so as not to exceed 75 percent of full flowing capacity during the 25-year storm event.

A hydraulic model of the proposed conveyance system was constructed using the Storm and Sanitary Analysis (v.2012) module by Autodesk. Conveyance piping, orifice structures, and pumps were input to the model as links. Inlets, catch basins, manholes, and storage structures (including pump station wetwells) were input as junction structures. The contributing drainage areas assumed negligible off-site in-flow and zero evaporation. The hydrology method used to estimate peak flows and total storm volumes was the Santa Barbara Urban Hydrograph (SBUH), with time series graphs obtained from Clark County using a Soils Conservation Service (SCS) Type 1A 24-hour storm distribution. The total rainfall depth for the 25-year and 100-year, 24-hour storm events is 3.6 inches and 4.3 inches, respectively.

Drainage basins were delineated based upon proposed grading of the Facility. Drainage basin maps, with the proposed surface coverage types, are shown in Figure 6 and Figure 7, Facility elements in Terminal 4 and Terminal 5, respectively.

Full model results for each storm event are included in Appendix F. Summary results are listed in Table 9. Rainfall intensity amounts described earlier in section 1.4.8 are used in the development of the Type 1A rainfall distribution hydrograph. The results are shown in Table 9.

Table 9. Summary of 25-Year Storm Event Model Results

Drainage Basins	Total Area (acres)	Contributing Area (acres)	25-Year Storm Flow Rate (cfs)	100-Year Storm Flow Rate (cfs)
Area 200 Admin/Support Buildings[1]	1.6	0.8	0.66	0.80
Area 200 Rail Offloading Area[2]	6.2	5.3	3.39	4.22
Area 300 Containment Berm[3]	18.2	18.2	2.0	2.0
Area 300 Support Buildings and Parking[4]	2.9	1.6	1.1	1.36
Area 400 Marine Terminal[5]	7.7	2.2	N/A	N/A
Area 500 Transfer Pipeline[5]	4.9	N/A	N/A	N/A
Area 600 West Boiler[6]	0.9	0.5	0.31	0.38
Rail Infrastructure[5]	5.4	N/A	N/A	N/A
Total	47.77			

Notes:

1. Modelled flow in manhole 0200-SDMH-002.
2. Includes ground area surrounding building at inlets 0200-CB-003 and 0200-CB-005, plus rail unloading shed roof drains connected to manholes 0200-SDMH-009 and 0200-SDMH-022.
3. Flow rate restricted by orifice structure 0300-CS-001 OR to match peak capacity of oil-water separator 0300-OWS-001 (approx. 880 gpm). Tank roof drains connected to storm system outside berm area.
4. Includes sub-basins 0300-1, 0300-2, and 0300-3.
5. Marine Terminal, Transfer Pipelines, and Rail Infrastructure areas not modelled. Existing collection systems or dispersion currently in place in these areas.
6. Modelled flow rate at manhole 0600-SDMH-001.
7. Total acreage modeled is higher than areas within the lease boundary as a result of treating 0.2 acre of off-site impervious that contributes to the Facility.

Copyright © BergerABAM. All Rights Reserved.

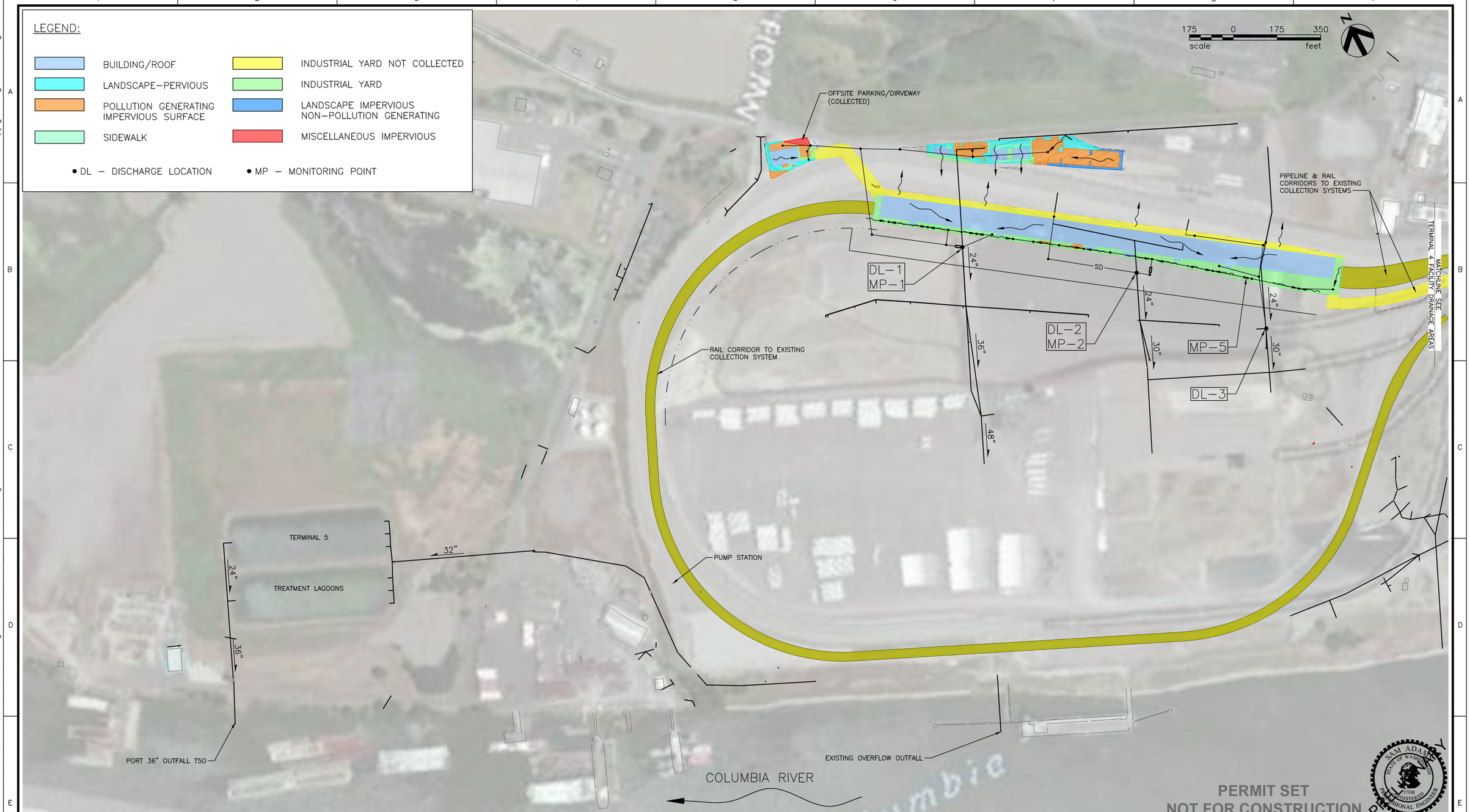

PERMIT SET
NOT FOR CONSTRUCTION

NO.	DATE	REVISION	BY	CK'D	APP

BergerABAM
700 NE Multnomah Street, Suite 900
Portland, Oregon 97232-4189
(503) 872-4100 FAX: (503) 872-4101

VANCOUVER ENERGY
Tesoro Savage Petroleum Terminal LLC

PROJECT:
VANCOUVER ENERGY
PORT OF VANCOUVER, WASHINGTON

DESCRIPTION:
TERMINAL 5 – FACILITY DRAINAGE SYSTEM & PROPOSED SURFACING

DESIGN:	DRS	START DATE:	2/26/2015	SCALE:	AS SHOWN
DRAWN:	TNP	PRINT DATE:	10/12/2015	PROJECT MANAGER:	SAVAGE_PM
CHECKED:	MCH	APPROVED:	SA	SIZE:	24x36
DRAWING NUMBER				SHEET	REV.
				1/1	

Last Saved by: Tony.pritchett on: Feb 26, 2015 10:06 AM File: Q:\Vancouver\2013\A13.0287\02\CADD\Figures\TERMINAL 5 FACILITY DRAINAGE AREAS.dwg

This page left blank intentionally.

Copyright © BergerABAM. All Rights Reserved.

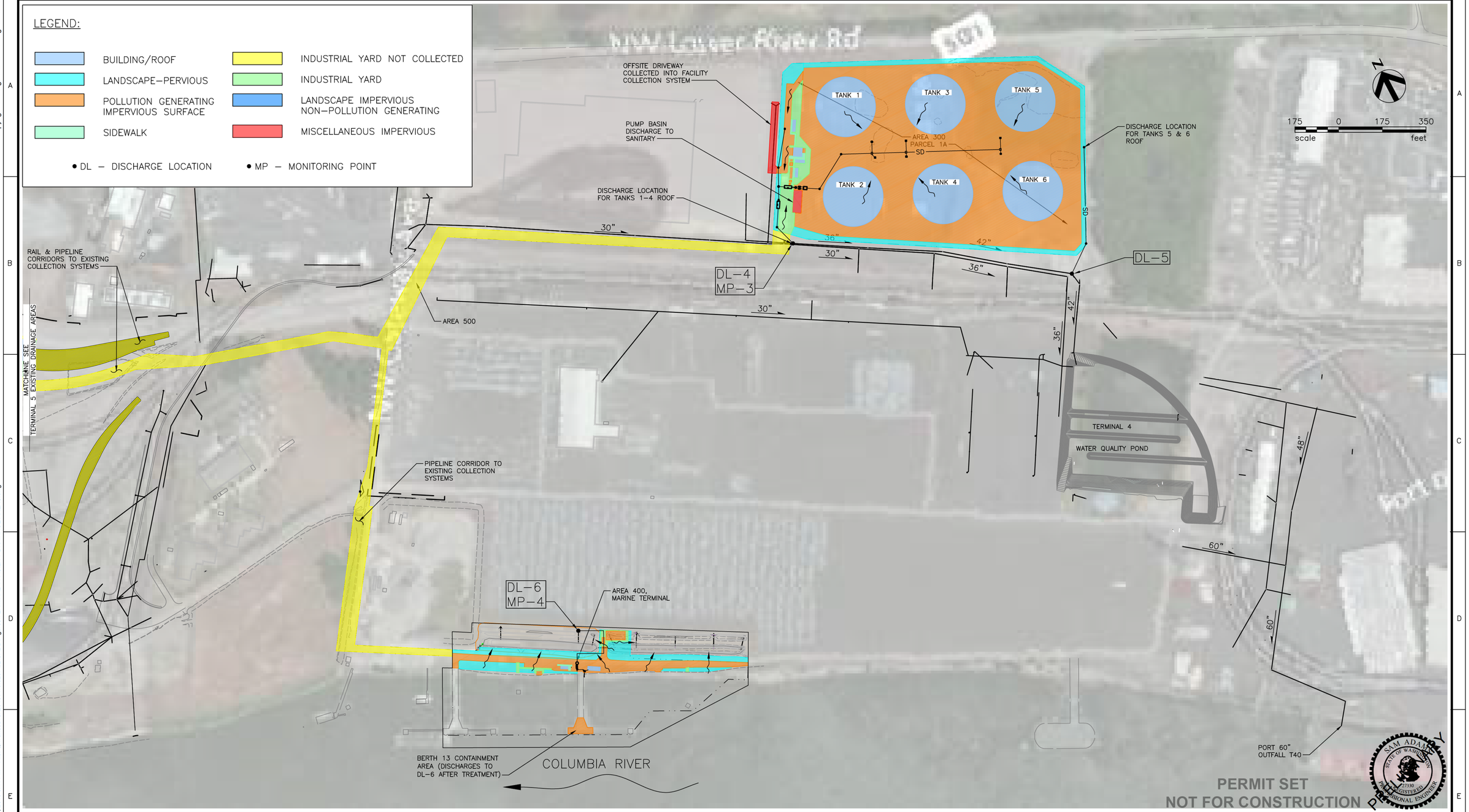

NO.	DATE	REVISION	BY	CK'D	APP

BergerABAM
700 NE Multnomah Street, Suite 900
Portland, Oregon 97232-4189
(503) 872-4100 FAX: (503) 872-4101

VANCOUVER ENERGY
Tesoro Savage Petroleum Terminal LLC

PROJECT: VANCOUVER ENERGY
PORT OF VANCOUVER, WASHINGTON

DESCRIPTION: TERMINAL 4 – FACILITY DRAINAGE SYSTEMS & PROPOSED SURFACING

DESIGN:	DRS	START DATE:	2/24/2015	SCALE:	AS SHOWN
DRAWN:	TNP	PRINT DATE:	2/26/2015	PROJECT MANAGER:	SAVAGE_PM
CHECKED:	MCH	APPROVED:	SA	SIZE:	24x36

DRAWING NUMBER | SHEET 1/1 | REV.

Last Saved by: Tony.pritchett on: Feb 24, 2015 5:41 PM File: Q:\Vancouver\2013\A13.0267\02\CADD\Figures\TERMINAL 4 FACILITY DRAINAGE AREAS.dwg

This page left blank intentionally.

5.2.2 Area 200 – Unloading and Office

The Facility in Area 200 will be separated into two distinct development areas. The administration and support buildings are located north of the rail transportation corridor on Old Lower River Road and the rail unloading facility is located on the southern portion of the rail transportation corridor inside the Terminal 5 loop tracks.

Stormwater from both development areas, as well as from the West Boiler (Area 600), will be treated on site and then discharged to the existing stormwater system in the project vicinity.

The proposed surface coverage located within the rail unloading area is summarized below in Table 10. The table is organized by the surfaces that were analyzed in the hydraulic and water quality models. The surface type used in the WWHM Version 3 water quality model is also identified.

Table 10. Areas 200/600 - Unloading and Office, incl West Boiler - Proposed Surface Coverage

Surface Description	Existing Condition	WWHM Type	Area (acres)
Rail Unloading - Uncollected Stormwater			
Walkways	Untreated Impervious	Sidewalks/Flat	0.01
Industrial Yard	Untreated Impervious	Parking/Flat	0.3
Rail Unloading - Facility West Roof			
Building	Untreated Impervious	Roof/Flat	1.9
West Boiler, Admin/Support Area, and West Portion of Industrial Yard			
Parking and Drive Aisle	Untreated Impervious	Roads/Flat	0.9
Buildings	Untreated Impervious	Roof Tops/Flat	0.2
Sidewalk/Walkways	Untreated Impervious	Sidewalks/Flat	0.1
Industrial Yard	Untreated Impervious	Parking/Flat	0.2
Landscaping	Untreated Impervious	A/B, Lawn, Flat	0.1
West Boiler – Uncollected Stormwater			
Industrial Yard	Untreated Impervious	Parking/Flat	0.4
Admin/Support Area – Uncollected Stormwater			
Buildings	Untreated Impervious	Roof Tops/Flat	0.2
Industrial Yard	Untreated Impervious	Parking/Flat	0.0
Landscaping	Untreated Impervious	A/B, Lawn, Flat	0.5
Vanexco Cap Industrial Yard			
Sidewalk/Walkways	Untreated Impervious	Sidewalks/Flat	0.01
Industrial Yard	Untreated Impervious	Parking/Flat	0.6
Rail Unloading - Facility East Roof			
Building	Untreated Impervious	Roof/Flat	1.9
East Portion of Industrial Yard			
Sidewalk/Walkways	Untreated Impervious	Sidewalks/Flat	0.04
Industrial Yard	Untreated Impervious	Parking/Flat	1.3
Buildings	Untreated Impervious	Roof/Flat	0.04
Mechanical Equipment	Untreated Impervious	Roads/Flat	0.03
Total (West Boiler and Unloading and Office)			**8.7**

The results of the collection system modeling for Area 200 are summarized in Table 11. A detailed description of the collection system follows. The table includes data from Area 600 as it contributes directly to the sizing of the proposed stormwater system.

Table 11. Area 200 - Unloading and Office - Collection System Model Results

Collection System ID	Total PG* Area (acres)	Total NPG ** Area (acres)	25-Year Storm Flow Rate (cfs)
West Outfall (0200 STM-1):			
Area 200 Admin/Support Buildings	0.8	0	0.66
Area 200 Rail Offloading Area[1]	0.0	2.1	1.42
Area 600 West Boiler	0.1	0.3	0.3
Total	0.9	2.6	2.38
Central Outfall (0200 STM-2):			
Vanexco Cap – West[4]	2.6	0	2.15
Area 200 Rail Offloading Area[2]	0	1.3	0.41
Total	2.6	1.3	2.56
Eastern Outfall (0200 STM-3):			
Vanexco Cap – East[4]	4.8	0	3.91
Area 200 Rail Offloading Area[3]	0	1.9	1.56

*PG=pollution-generating; **NPG=non-pollution generating

Notes:

1. Western portion including at-grade areas and roof totaling approximately half of the Rail Unloading Area.
2. Eastern portion of at-grade area.
3. Eastern half of rail shed roof.
4. Vanexco Cap Totals include full contributing area outside of lease areas. Table 7 includes areas within Facility lease-hold.

5.2.2.1 Administration and Support Buildings

Stormwater from the administration and support buildings will be collected into a single stormwater system running predominantly east to west. At the west end stormwater is commingled with runoff from the West Boiler (Area 600) before heading south under the rail corridor to serve the rail unloading facility.

Pollution-generating surfaces proposed in this area will consist of the parking lots and driveways. Stormwater from the roof areas will be collected in rain gutters and discharged directly to the stormwater system. Runoff from the site areas, including sidewalks and landscaping, will be directed towards the developed parking lots where feasible, or when not infiltrated in soils, will be dispersed following the existing topography and runoff patterns south into the rail corridor.

The two proposed containment tanks will be located to the southeast of the easternmost administration/support building will be installed on a concrete pad sloped towards the parking lot. The tanks will be double-walled to satisfy containment requirements and will be unloaded by a vacuum truck service licensed to haul and disposal of potentially oily water.

The tanks will receive flow from the containment trenches and drainage systems located within the rail unloading building. The connecting pipeline will be fully welded steel and be located above-ground for visual monitoring. The tanks will be operated such that 825 bbl of capacity is reserved to contain an entire railcar (plus 10 percent). A remaining 175 bbl will be used for stormwater contributing into the rail

unloading buildings floor drains, and rail drip pans as well as occasional washdown water for parts and fittings.

5.2.2.2 Unloading Facility

Stormwater for the rail unloading facility will consist of roof runoff from the rail unloading building and stormwater collected from the industrial yard area on the south side of the building. Stormwater on the north side of the building will remain unchanged.

The roof of the rail unloading building is designed as a single shed section to the south. Stormwater will be collected in rain gutters installed along the south side of the building and be collected at two rain drain locations. From these points, the stormwater will be discharged into a collection manhole upstream of the Facility's monitoring manholes. Stormwater collected from the roof areas is segregated from pollution-generating surfaces and is not proposed to receive water quality treatment.

A series of area inlets along the south side of the building will collect stormwater from the industrial yard area. No industrial activities are proposed in this location. Stormwater from the roof areas of the E-houses, control room, and fire pump building will be commingled in this area with stormwater from the ground and the mechanical and electrical equipment pads. A small berm installed along the Facility's fence line will segregate stormwater in this area from the proposed rail track south of the Facility.

Possible pollution-generating surfaces in this area include the air compressor equipment pad and electrical metering and transformer equipment. All equipment will be inspected regularly to promptly identify leaks and drips. All electrical transformers and equipment will use mineral oil. After grading, a layer of imported gravel or similar material will be placed to prevent soil erosion and facilitate pedestrian access. Vehicle access will be prohibited except for infrequent maintenance.

The collection system on the south side of the rail unloading facility is designed into two systems on the east and west. Stormwater from the western system will be commingled with runoff from the administration and support building and West Boiler and treated through a StormFilter water quality vault. Section 7 includes a detailed description of sizing and water quality. Treated stormwater is then commingled with the roof runoff from the western half of the rail unloading building and discharged to the existing system at discharge Location 1. The eastern system is treated through a StormFilter water quality vault and then commingled runoff from the rerouted western portion of the Vanexco Cap and discharged to the existing system at discharge Location 2. Rerouted stormwater from NGL Supply and the eastern portion of the Vanexco Cap will be commingled with roof runoff from the eastern portion of the rail unloading building and discharged to the existing system at discharge Location 3.

Additional stormwater improvements necessary to facilitate construction of the Facility, include rerouting stormwater from the collection system located on top of the Vanexco Cap liner and conveying stormwater from existing NGL Supply. These drainage lines need to be relocated to avoid conflicts with the proposed building structure. Construction details for connections to the Vanexco Cap drainage system are included in Appendix C. These improvements are intended only to convey stormwater collected upstream. The Facility is not proposing to add additional stormwater or pollutants into these systems.

5.2.3 Area 300 – Storage

The proposed Facility in Area 300 is generally described in two development areas. The storage tank containment area will contain the six storage tanks, piping, and stormwater collection systems located within an approximate 6-foot-tall containment berm. The support area includes the Facility driveway, parking lot, E-houses, electrical and mechanical equipment, and storage building which are all on the western portion of the parcel.

Stormwater during regular operations from both development areas will be treated on site and discharged to the existing stormwater system currently installed along the south side of the parcel adjacent to the rail

corridor. There are two discharge locations and they are described below as the West Outfall and East Outfall. The East Outfall collects only non-pollution generating stormwater from the roofs of the two easternmost storage tanks.

The proposed surface coverage located within the Storage Area is summarized below in Table 12. The table is broken up into the surfaces that were analyzed in the hydraulic and water quality models. The surface type used in the WWHM water quality model is also identified.

Table 12. Area 300 - Storage Area - Proposed Surface Coverage

Surface Description	Existing Condition	WWHM Type	Area (acres)
Storage Area - Tank Area			
Storage Tank Roofs	Untreated Impervious	Roof Tops/Flat	6.23
Storage Area - Uncollected Stormwater			
Exterior Berm Landscaping	Untreated Impervious	A/B, Lawn Flat	1.2
Containment Area Stormwater			
Containment Yard Area	Untreated Impervious	Roads/Flat	11.96
Storage Area - Support Buildings, Parking, and Industrial Yard			
Landscaping	Untreated Impervious	A/B, Lawn, Flat	0.36
Support Buildings	Untreated Impervious	Roof Tops/Flat	0.09
Sidewalks	Untreated Impervious	Sidewalks/Flat	0.05
Parking Area /Drive Aisle	Untreated Impervious	Roads/Flat	0.31
Industrial yard	Untreated Impervious	Parking Flat	0.57
Total			**20.8**

The results of the collection system modeling for Area 300 are summarized in Table 13. A detailed description of the collection system follows.

Table 13. Area 300 - Storage Area - Collection System Model Results

Collection System ID	Total PG Area (acres)	Total NPG Area (acres)	25-Year Storm Flow Rate (cfs)
West Outfall (0300 STM-1):			
Storage Tanks (4)[1]	0	4.2	3.47
Containment Berm[2]	5.4	0	2.0
Support Buildings and Parking	0.4	1.1	1.1
Total	5.8	5.3	6.57
East Outfall (0300 STM-2):			
Future Storage Tanks (2)	0	2.1	1.74
Total	0	2.1	1.74

Note:
1. Modelled flow from "Tank Roofs."
2. Flow rate listed is prior to orifice structure 0300-CS-001 OR. Flow rate is restricted by the orifice structure to match peak capacity of oil-water separator 0300-OWS-001 (approx. 880 gpm). Flow rates in excess of conveyance system capacity allowed to pond within berm area.

5.2.3.1 Storage Tank Containment

The stormwater system in the containment area is designed for normal operations. Under normal operations, the storage tanks are designed to be a fully closed system where crude oil is not exposed to stormwater. Upset conditions, including major servicing, draining of tanks below their normal operational

low levels, and product releases, will require additional operational stormwater BMPs and/or spill response actions.

The containment systems include a 2-foot tall intermediate berm surrounding each tank. Stormwater from each tank will be collected at a single inlet adjacent to the center berm. Each inlet will be equipped with a spill trap capable of containing a minimum of 5 gallons of oil. Stormwater piping will be welded HDPE and isolation valves will be provided in control structures located along the center berm. The control valves for the intermediate berms will be maintained in the open position. During maintenance activities or minor spills, these will be closed to isolate the affected areas.

Piping from each intermediate berm will collect at the center berm and will be transferred to a control structure located at the west end of the containment area. The control structure will be equipped with API style oil water separation baffles. The outlet of the control structure will be equipped with a flow control tee and horizontal orifice to restrict flows from the containment area to the rated capacity of the downstream parallel oil-water separators. Stormwater then will be treated through two coalescing plate oil-water separators before discharging into a stormwater pump station.

The control structure will limit discharges leaving the containment area to 880 gpm to meet the design flow rates for the oil-water separation as described in section 7. As a result the conveyance system and containment berm may experience minor ponding during large storm events. Hydraulic modelling estimated the maximum depth of ponded water within the containment berms to be approximately 0.15 feet (2 inches) during the 25-year storm event.

The pump station will operate only by manual control after the operator had confirmed no visible oil sheen within the pump station. The elevations of the control structure, oil water separators, and pump station are designed to maintain the required full containment volume at all times. The containment berm is sized to store the full contents of 110 percent of one tank plus a 100-year rainfall event.

The pump station then discharges to a StormFilter vault equipped with granulated activated carbon (GAC). Sizing of the treatment units including the control structure, oil-water separators, pump station, and treatment vaults are discussed in detail in section 7.2. Following treatment in the water quality vault, the stormwater is commingled with stormwater from the parking lot and support area.

The roofs of the containment tanks are the only non-pollution generating surfaces that are separated from the remainder of the site. Stormwater is collected from the roof of each tank and piped through fully welded HDPE pipelines from the containment area to connections with the stormwater system. The roof drains are designed with containment valves.

The pump basin containing the crude oil transfer pumps which transfer product from the Storage Area to the Marine Terminal will be located within the containment area. Stormwater from this approximately 3,300 square feet area will discharge through a sump and normally closed valve to an oil-water separator prior to discharge to the City's sanitary sewer.

5.2.3.2 Support Area

Stormwater from the support area will be collected in catch basins in the driveway, parking lot areas, and an area inlet from the industrial yard. All stormwater collected here is commingled with treated stormwater from the containment area. Stormwater is then treated through a StormFilter water quality vault.

Pollution-generating surfaces include the driveway, parking lot areas, and equipment area containing the electrical substation, transformers, metering equipment, and mechanical air compressors. The electrical gear will use mineral oil and all equipment will be inspected regularly to promptly identify drips or leaks of any oils or lubricants. The yard area consists of graveled surfacing gently graded to inlets. Vehicle use in this area will be prohibited except for occasional maintenance.

5.2.3.3 Pump Basin

Stormwater from the pump basin will be collected in a sump located in the southwest corner of the concrete basin. Under normal operations, stormwater from this basin will be collected and pass through an oil-water separator sized to treat the 100-year, 24-hour storm event. Stormwater will be discharged to the City's sanitary sewer system in a combined lateral from the storage building. The pump basin houses the transfer pumps, valves, piping, and appurtenances necessary for operation of the transfer pumps.

During maintenance activities of the equipment, a containment valve located on the collection sump will be closed. Absorbent pads, dip pans, and other temporary spill containment measures will be in place to protect the water quality. Any oily residue from release of product, seals, or lubricants will be cleaned and any releases will be contained within the concrete pump basin, collected and hauled off site for disposal.

Discharge to sanitary sewer from this limited 3,300-square-foot basin was selected due to the large and concentrated number of fittings and routine maintenance. The discharge amounts related to this have been calculated on an annual average and maximum day (100-year, 24-hour) storm events. Details of those calculations are included in section 8.3.3. The 100-year, 24-hour event will result in 7,000 gallons of stormwater or approximately 5 gpm. The oil-water separator selected is rated to treat a standard flow rate of 27 gpm and a maximum process rate of 144 gpm.

5.2.4 Area 400 – Marine Terminal

Marine Terminal stormwater will be infiltrated through a series of bioinfiltration swales that were constructed as part of the Auto Terminal expansion in mid-1990s. The swales were designed to serve the entire 25-acre drainage basin. Stormwater at the dock is currently not collected or treated and sheet flows directly into the Columbia River. The upland portions waterward of the swales are currently graded towards the river and sheet flow down the embankment into the river.

The construction of the terminal will make significant improvements to the capture of stormwater in this area. The upland portions will be graded back toward the bio-infiltration swales. Runoff from the access driveway will be treated through a media filter drain installed between the edge of pavement and the bioinfiltration swale.

One 120-lineal-foot section of biofiltration swale will be removed to install the marine vapor control units. Runoff currently being directed to this swale will be rerouted to the swale immediately east for treatment.

Runoff from the replaced section of the trestle will continue to sheet flow into the Columbia River. The trestle will not be used for regular vehicular traffic and, therefore, is not a pollution-generating surface. Stormwater collection and containment will be provided at the face of the dock. The containment area includes all areas inclusive of all fittings, hoses and mechanical equipment. According to 33 CFR 154.530, containment in this area is required to capture a minimum 3 bbls based upon the Facility's loading equipment. A total containment volume of 1989 cubic feet is provided equaling approximately 350 bbl.

During loading operations, the containment valve at the dock will be maintained in a closed position. Following loading operations, the containment area will be inspected visually for a sheen and, if necessary, spill response measures will be taken to clean up any oils or contaminates present. A gravity drain line extends from the containment area upland. At the upland area, stormwater from the dock will be treated through an oil-water separator and a series of water quality vaults containing ZPG media and granulated activated carbon filters. Following treatment, stormwater will be pumped and discharged to the biofiltration swales.

The proposed surface coverage located within the Marine Terminal is summarized in Table 14. The table is broken into the subbasins that were analyzed in the hydraulic and water quality models. The surface type used in the WWHM water quality model is also identified.

Table 14. Area 400 - Marine Terminal - Proposed Surface Coverage

Surface Description	Existing Condition	WWHM Type	Area (acres)
Marine Terminal – Upland Areas			
Landscaping	Untreated Impervious	A/B, Lawn, Flat	0.9
Parking/Drive Aisle	Untreated Impervious	Roads/Flat	1.0
Buildings	Untreated Impervious	Roof/Flat	0.03
Sidewalk/Walkways	Untreated Impervious	Sidewalks/Flat	0.01
Industrial Yard	Untreated Impervious	Parking/Flat	0.1
Total			2.0
Marine Terminal – Containment Area			
Loading Containment Area	Untreated Impervious	Roads/Flat	0.1
Total			2.1

5.2.5 Area 500 – Transfer Pipelines

The transfer pipelines are located in non-exclusive easements with the port. Transfer pipelines are not considered to be pollution-generating surfaces and therefore the port's existing stormwater system is adequate to serve the Facility areas located within the general use areas. The pipelines will be constructed so as to not modify existing drainage patterns. The stormwater collection systems in this area of the port's general use are not subject to industrial activity created by a single source or lessee. The stormwater systems in Terminal 4 and Terminal 5 that receive stormwater from the transfer pipelines are permitted under existing Stormwater permits and stormwater from these areas is treated prior to discharge to the Columbia River.

Granular rock surfacing will be installed underneath the above grade sections of pipeline. The project has identified the downstream catch basins and area inlets within the immediate vicinity of the transfer pipelines. The locations of retrofitted catch basins is specified on the Environmental Control plans submitted in Appendix C. Spill traps capable of retaining a minimum of 5 gallons of oil will be retrofitted on the downstream stormwater system. The transfer pipeline corridor will be inspected visually every day for damage, corrosion, and pinholes. Leak detection monitors based on flow volumes will also be installed on the pipelines and monitor constantly for any sign of damage or leaks in the pipelines. Inspection of the downstream stormwater inlets for oil sheen will be performed weekly.

Belowgrade sections of pipeline will additionally be installed with leak detection to monitor for leaks or groundwater intrusion. Transition vaults between abovegrade sections of pipeline and belowgrade sections will be inspected weekly.

5.2.6 Area 600 – West Boiler

The West Boiler is not proposed to be constructed in the first phase of development. The West Boiler, the associated pipe bridge, and the mechanical outfitting of the third unloading rail station are deferred as described in the ASC. The project is requesting approval for improvements for this area as part of the application.

The industrial processes associated with the future West Boiler will be fully contained within the west boiler building. The site includes the building, parking lot and driveway, E-house, and landscaping improvements. Pollution-generating surfaces in this area will include the driveway and parking area. Transfer pipelines are above grade and are non-pollution generating. Runoff from the roofs of the building and E-house will be directed to the ground and collected in the stormwater system.

The stormwater system includes two catch basins located within the pavement limits of the driveway and parking lot and an area inlet located in a grassy swale constructed on the south side of the building. The swale is constructed for conveyance only to direct stormwater from the site to the inlet for collection.

Stormwater from the West Boiler is routed east and discharges by gravity into the stormwater line crossing south under the rail corridor. From here, stormwater commingles with stormwater from the administration and support buildings, West Boiler, and yard drains at the west end of the rail unloading building for treatment through a StormFilter water quality vault prior to discharge to the existing Terminal 5 stormwater system.

5.2.7 Rail Infrastructure

The rail infrastructure that will be used by the Facility are bounded on either side by rail transportation tracks that are for general use by the Port and by other tenants. The rail located within the EFSEC jurisdictional boundary is intended for rail transportation, and therefore there is no functional difference between the possible pollution sources of the Facility rail and the adjacent port rail. The drainage systems installed by the Port as part of the redevelopment at Terminal 5 were designed for runoff from the rail corridor and will continue to collect, convey, and treat stormwater from this area. The design report for the WVFA project is included in Appendix D.

The rail improvements proposed by the Facility include approximately 4,900 linear feet of an additional rail loop to be constructed on the outside of the existing WVFA rails on approximately 1.8 acres. The construction of the rail loop will reduce the existing gravel access road width and will not result in any modifications to the prior pollution generating impervious surface totals. The improvements will be constructed without impacting the existing drainage patterns of the site and are located within the previously developed rail and road corridor. Drainage inlets will be retrofitted with spill control devices capable of containing a minimum 5 gallons.

The surface coverage proposed within the rail improvement corridor is summarized below in Table 15. The table is broken up into the surfaces that were analyzed in the hydraulic and water quality models. The surface type used in the WWHM water quality model is also identified.

Table 15. Rail Improvements - Proposed Surface Coverage

Surface Description	Existing Condition	WWHM Type	Area (acres)
Rail Improvements			
Industrial Yard	Untreated Impervious	Parking/Flat	1.8

6. Industrial Stormwater Best Management Practices

The Facility has employed BMPs extensively to protect stormwater quality. This section is an overview of the BMPs, which will be installed in each project area. The purpose of this section is to demonstrate the extent to which stormwater has been excluded from the industrial activities on site.

6.1 Structural Best Management Practices

The following sections discuss the structural source controls and BMPs used to isolate stormwater from industrial activities.

6.1.1 Area 200 – Unloading and Office

Industrial activity within Area 200 consists primarily of unloading the railcars and transferring product from the rail unloading building into the transfer pipeline area. The unloading process, pumps, containment

trenches, and conveyance pipelines for crude oil in this area are fully contained within the rail unloading building. The building will be a shed section to prevent most stormwater from entering the unloading area.

Interior to the unloading area, rail drip pans will be installed and floor drains will collect any runoff from the railcars or blown-in stormwater to a collection system. Any stormwater collected in this system will be pumped to the containment tanks located at the administration and support building area to be hauled off and legally disposed of. The floor will be graded and designed to direct any spill internally into the rail drip pans or the containment trenches. A perimeter curb for full containment of an accidental discharge is also provided. Table 16 summarizes the BMPs included in Area 200.

Table 16. Area 200 - Unloading and Office - Structural BMPs

Structural BMP	Site Description
Landscaping and lawn/vegetation management (BMP S411)	Landscaping is provided at the Administration and Support Building Area to facilitate natural drainage, infiltration and prevent soil erosion.
Loading and unloading areas (BMP S412)	Product unloading areas are located within the rail unloading building to keep stormwater from contact with the industrial activity. Rail drip pans and containment systems are installed capable of containing 110% of a full railcar.
Parking and storage of vehicles and equipment (BMP S421)	The parking lot area is for employee and visitor parking only and is therefore a not classified as a high use site.
Soil erosion and sediment control at industrial sites (BMP S425)	Crushed imported gravel will be used to control erosion of exposed surfacing along the south side of the rail unloading area.
Storage of liquids in permanent above-ground tanks (BMP S427)	Double-walled storage tanks will be installed for the containment tanks, fire foam, and fuel storage. Tanks will be located on concrete pads for ease of inspection and foam and fuel tanks will be located within the fire foam building.

6.1.2 Area 300 – Storage

Industrial activity within Area 300 consists primarily of the storage of crude oil. The storage tanks meet all applicable API standards. The tanks are provided with a floating internal roof to limit vapor emissions and fixed roofs to keep stormwater runoff from entering the tank. Gutters will capture rainwater and discharge stormwater to the on-site stormwater systems as described in section 5. The transfer pipelines in the containment area are non-pollution generating. Due to the increased number of flanges, fittings, and pump components the pump basin's stormwater will be treated through an oil-water separator and discharged to the sanitary sewer. The only exposed mechanical equipment on site is an air compressor located near the storage building.

Table 17 summarizes the BMPs included in Area 200.

Table 17. Area 300 - Storage - Structural BMPs

Structural BMP	Site Description
Landscaping and lawn/vegetation management (BMP S411)	Landscaping is provided at the Support and Parking Area, as well as on the outside slope of the containment berm. Landscaping is also provided along the north and west property lines to comply with local land use screening regulations. Landscaping will be installed to prevent soil erosion, facilitate natural drainage and infiltration.
Parking and storage of vehicles and equipment (BMP S421)	The parking lot area is for employee parking only and is therefore a not classified as a high use site.
Soil erosion and sediment control at industrial sites (BMP S425)	Crushed imported gravel will be used to control erosion of exposed surfacing in the southwest portion of the site and around the mechanical and electrical equipment near the pump basin.

Structural BMP	Site Description
Storage of liquids in permanent above-ground tanks (BMP S427)	Product storage tanks will be constructed per API standards with double floors and leak detection. Double-walled storage tanks will be installed for the fire foam, and fuel storage. Foam and fuel tanks will be located within the fire foam building.

6.1.3 Area 400 – Marine Terminal

The industrial activity at the Marine Terminal consists primarily of loading vessels with product. Transfer pumps are located at Area 300 and discussed above. Conveyance piping will deliver the product to the dock. The front of the dock where all the flanges, valves, loading arms, and hoses are located is equipped with a spill containment curb. During loading operations, the isolation valve from this area will be closed; only after operations are complete and no visible sheen is observed in the stormwater will the area be drained.

The remainder of the site, including the electrical and mechanical equipment for the fire pump and foam, will be contained within upland structures and not exposed to stormwater. The marine vapor combustion units will be installed on a concrete pad. The units' combust the inert vapors from the vessel hull, using natural gas to assist with the combustion if needed. The reduction of the VOCs is approximately 99.8 percent. Therefore, stormwater contamination from vapor contact in these areas is *de minimis*.

Table 18. Area 400 - Marine Terminal - Structural BMPs

Structural BMP	Site Description
Landscaping and lawn/vegetation management (BMP S411)	Landscaping is provided between the top of bank and the access road wherever feasible. Landscaping is intended to reduce soil erosion. Infiltration directly at the top of bank is not recommended. Stormwater is directed upland toward the bio-infiltration swales.
Parking and storage of vehicles and equipment (BMP S421)	The parking lot is for employee parking only and therefore is not classified as a high use site.
Soil erosion and sediment control at industrial sites (BMP S425)	Crushed imported gravel will be used to control erosion of exposed surfacing where landscaping is not installed.
Storage of liquids in permanent above-ground tanks (BMP S427)	Double-walled storage tanks will be installed for the fire foam, and fuel storage. Foam and fuel tanks will be located within the fire foam building.

6.1.4 Area 500 – Transfer Pipelines

The transfer pipelines are considered non-pollution generating surfaces. There is no activity in this corridor with the exception of routine inspection. Flow measurement and pressure sensors along the pipelines detect leaks and monitor for any indication of accidental releases. Containment measures are provided in downstream stormwater inlets.

Table 19. Area 500 - Transfer Pipelines - Structural BMPs

Structural BMP	Site Description
Soil erosion and sediment control at industrial sites (BMP S425)	Crushed imported gravel will be used to control erosion of soils underneath the pipeline.

6.1.5 Area 600 – West Boiler

Industrial activity at the West Boiler is fully contained within the boiler building and E-house. Transfer of steam to the rail unloading building and return of condensate will be accomplished using fully welded steel pipelines located above-grade transfer pipelines and pipe bridge over the Terminal 5 rail loops.

Table 20. West Boiler - Structural BMPs

Structural BMP	Site Description
Landscaping and lawn/vegetation management (BMP S411)	Landscaping is provided around the parking areas and building sides to prevent erosion, facilitate infiltration and protect existing drainage patterns.
Parking and storage of vehicles and equipment (BMP S421)	The parking lot area is for employee parking only and is therefore a not classified as a high use site.
Soil erosion and sediment control at industrial sites (BMP S425)	Crushed imported gravel will be used to control erosion of exposed surfacing where landscaping is not installed immediately adjacent to the transfer pipelines.

6.1.6 Rail Improvements

No industrial activity takes place within the rail corridor, which is used only for rail transportation. Maintenance activities necessary for rail transportation will be conducted on the rail spur located at the southeast corner of the rail unloading building. Rail containment pans and a concrete working surface will be provided around the rail spur. Stormwater from the rail spur will be collected in catch basins and containment pans within the rail for treatment and monitoring. A containment valve, oil-water separator, and monitoring manhole will be provided for this facility. This stormwater will continue to flow through the stormwater collection system on the south side of the rail building and will eventually contribute flows to water quality vault 0200-WQV-002 for additional water quality treatment. A downstream monitoring manhole is provided to confirm that discharges meet the NPDES permit conditions.

Any maintenance activities related to railcars and locomotives will only be completed for cars already on-site being processed by the facility. The facility will not be used as a maintenance facility receiving railcars from other parties and transporters for maintenance activities.

6.1.6.1 Typical On-site Rail Maintenance

A detailed assessment of possible maintenance needs was completed for this facility. The following maintenance activities may be conducted on site as necessary to maintain safe rail transportation. These most frequently conducted activities only involve use of hand tools, impact wrenches, jacks, carpet knife, and if necessary a small welder.

- Wheel replacement
- Brake chains, boots, cylinder repairs, and/or replacement
- Brake pipe
- Grab iron, hand hold, sill step repairs, and replacement
- Stenciling
- Head-shield bolt tightening
- Hose replacement, hanger repair and replacement
- Placard/holder repair and replacement
- Knuckle pins replacement
- Cage chains replacement
- Rail car exterior washing

Exterior railcar washing is not conducted on site for all vehicles. In accordance with 49 Code of Federal Regulations (CFR) 173.24(4) and 49 CFR 174.57, the Facility is prohibited to release tank cars back to the mainline carrier if there is presence of oily residue on the exterior of the cars as a result of unloading

operations. Facility operators will identify cars whose exterior must be washed for this reason at the time the cars are being unloaded in Area 200. At such time, and within the Area 200 unloading facility (where there is full containment to collect wash materials), the exterior of the railcar, limited to the immediate location of any oily residue, will be spot washed. Spot washing will be accomplished by placing absorbent pads under the railcar below the location being washed, spraying the affected area with environmentally friendly detergent soap (using a hand spray bottle for example), and wiping the area clean by hand with rags/wipes. Rags/wipes and absorbent pads used for cleaning will be collected, bagged, and managed in accordance with appropriate disposal practices for this type of waste. Typically the use of additional wash water is not necessary to complete the cleaning. However, should wash water be needed, it would be applied only to the area from which oily residue is to be removed. A single pressure washer may be used. Any residual wash water not collected in the absorbent pads will be collected in the rail drip pans and discharged to the two containment tanks located at the admin/support area of Area 200. A licensed hauling and disposal company will haul off the tank contents for disposal off site at an appropriate location.

The Applicant's experience is that railcar exterior washing averages one railcar per month at facilities that receive on average one unit train per day. Thus with an average receipt capacity of four unit trains per day, this activity would occur approximately four times per month.

6.1.6.2 Typical Off-site Rail Maintenance

The following maintenance activities are performed with much less frequency and due to the scope of repairs are conducted off site when possible. For repairs conducted on site that may impact water quality, additional secondary containment measures, such as absorbent pads or temporary spill containment measures, will be installed prior to beginning work. Additionally, the control valve will be placed in the closed position in the event of an accidental release.

- Wheel bearing maintenance, repairs, or replacement
- Brake shoe replacement
- Platform, running boards repairs and replacement
- Ladder repairs and replacement
- Manifold repairs and replacement
- Valve repairs and replacement
- Head-shield repairs
- Truck inspection, repair, replacement
- Coupler repairs
- Tank testing
- Welding and plasma cutting

6.1.6.3 Locomotive Maintenance

There is a possibility that a maximum of two locomotives may be on site for rail operations in the facility. Regular maintenance of the locomotives will also be conducted when necessary. The Operations Facility Safety Program submitted to EFSEC under separate cover includes detailed descriptions of locomotive operations and maintenance activities and includes operational BMPs to address water quality.

Typical maintenance activities specific for the switching locomotives may occur on site less frequently for repairs to:

- Traction motors
- Main generators
- Prime mover
- Oil changes

For the maintenance activities above, these operations will be completed on the spur track or inside of the rail unloading where secondary structural containment BMPs are in place. Additional absorbent pads

and/or temporary spill containment measures will be in place underneath the locomotive prior to beginning maintenance activities. Additional temporary spill prevention measures similar to those for mobile fueling will be used when completing oil changes. Replacement of the prime mover will typically be conducted off-site. The following items are described in detail and are considered part of normal locomotive operations.

Engine Blowdown

- If locomotive has been shut down for more than consecutive hours or after a heavy rain, open cylinder test valves located on side of engine block.
- Turn engine over by turning the start button for a couple revolutions.
- Once the blow down is complete, close all test valves and start engine.

Drain Pollution Tank

- Drain oil and water out of retention tank daily.
- Retention tank drain is located on the engineer's side of locomotive next to fuel tank.
- Dispose of waste in an approved container.

Supply Fuel and Sand

- Fuel locomotive per supplier and facility safety rules and regulations.
- Fill sand traps as needed.
- Fuel filler necks are located on each side of unit.
- Rear sand traps are above the battery compartments.
- The front sand traps are located on the sides by the air compressor.

6.1.6.4 Rail Infrastructure Maintenance

Occasionally maintenance to the rail infrastructure will be necessary. Maintenance to the rail track may include

- Welding
- Grinding
- Gas cutting
- Tamping of rail bed
- Regulating
- Placement and spreading rock/ballast
- Rail replacement

Table 21. Rail Improvements - Structural BMPs

Structural BMP	Site Description
Maintenance and Repair of Vehicles and Equipment (BMP S414)	Concrete work surface and rail drip pans are provided on the spur line to collect stormwater and direct to downstream treatment. An oil-water separator and monitoring manhole with containment valve are provided for local treatment.
Soil erosion and sediment control at industrial sites (BMP S425)	Crushed imported gravel will be used to control erosion of exposed surfacing where landscaping is not installed immediately adjacent to the transfer pipelines.
Railroad yards (BMP S422)	Drip pans are provided inside the rail unloading facility where hose/pipe connections exist.

6.2 Operational Best Management Practices

A complete operations SWPPP has been prepared and submitted under separate cover detailing all operations related to maintenance activities and the stormwater prevention procedures used on site. A

SPCCP has also been prepared and is being updated to address specific structural, operational, and response measures in place for the Facility.

7. Stormwater Treatment and Design

Stormwater treatment necessary to meet discharge standards is implicitly dependent upon the amount and types of contaminates the stormwater absorbs or transports along its route. The primary intent of developing a stormwater system is to limit, to the maximum practicable extent, the mixing of industrial activities and stormwater.

To that end, the Facility uses extensive source controls that segregate stormwater from crude oil and its vapors. As a result of the extensive use of structural source controls which segregate stormwater from the industrial operations, active treatment systems are not required by the Facility.

7.1 Chemicals Used in Treatment Process

The Facility will employ a system of passive stormwater treatment units, including oil-water separators, oil traps, and cartridge filter vaults, to treat stormwater. Descriptions of the proposed media and their composition follow. Reference MSDSs for the treatment units are included in Appendix J.

- GAC – Consists of 100 percent activated carbon (CAS# 7440-44-0).
- MetalRx Leaf Media – An absorbent filtration medium which contains 100 percent Earth-Wise certified compost material (CAS# N/A).
- Perlite – Consists of 100 percent perlite, which is a mineral composed of sodium potassium aluminum silicate (CAS# 93763-70-3). Perlite contains less than 0.1 percent of alpha-Cristobalite, tridymite, and alpha quartz.
- Zeolite – Consists of 100 percent of potassium-calcium-magnesium-aluminosilicate (CAS# 12173-10-3). The components include clinoptilolite zeolite/potassium, calcium, sodium, and aluminosilicate, hydrated (a).

7.2 Design and Sizing of Treatment Process and Units

The following sections summarize the treatment units used in the different areas of the Facility. The design of the Facility is based on meeting the conditions and treatment expectations of the Industrial Stormwater General Permit.

Water quality discharges from the site to surface waters are regulated by EFSEC, and that department administers the NPDES program for which this project is applying. The application requests that the water quality standards applied to this Facility be those described below. The intent of the Facility is to ensure compliance with the surface water quality standards by meeting the discharge limits of the Industrial Stormwater General Permit. Table 22 lists the anticipated water quality benchmarks.

Table 22. Anticipated Water Quality Benchmarks

Parameter	Average Monthly	Maximum Daily
Oil and Grease (mg/L)	10	15
TSS (mg/L)*	20	30
BTEX (ug/L)	–	100
Benzene (ug/L)	–	1.2
Total Copper (ug/L)		14
Total Zinc (ug/L)		117
	Daily Minimum	Daily Maximum
pH	6.0 standard units	9.0 standard units

*TSS=Total suspended solids

Water quality design is based on the online water quality flow rate developed using the WWHM version 3. All of the areas contributing to each stormwater treatment unit were modeled with the appropriate surface coverage identified. The model results provided the basis for the water quality design flows. In most cases, the water quality design flow used in the design was for the on-line 15-minute flow rate. The only modification to the water quality flow rate is at Area 300, where discharges from the containment area are maintained at the design flow rate of the oil-water separators located within the containment area.

Anticipated pollutant loadings and expected effluent concentrations are provided in Tables 25, 27, 30, and 32 below. The anticipated loadings were estimated using publicly available pollutant loading rates from stormwater case studies or previous engineering reports. A summary of the pollutant loading rates for each surfacing type included in the facility is included in Table 23 below. Source data and calculations are included in Appendix H.

Table 23. Pollutant Loadings for Each Facility Surface Type

Parameter	Building Roofs[1]	Driveway, Parking, and PG Industrial Yard[2]	NPGIS Industrial Yard[3]	Landscaping[4]	Sidewalks Pedestrian Areas[5]	Containment Areas[6]
Oil & Grease (mg/L)	-	-	-	-	-	8
TSS (mg/L)	17	228	96	37	173	23.7
BTEX (µg/L)	-	-	-	-	-	-
Benzene (µg/L)	-	-	-	-	-	1.2
Total Copper(µg/L)	7[7]	34	34[7]	94	17	6.4
Total Zinc(µg/L)	256[7]	224	150	263	107	43
pH	-	-	6	-	-	-
Ethylbenzene(µg/L)	-	-	-	-	-	1.0
Toluene (µg/L)	-	-	-	-	-	1.2

Notes:

1. Building Roofs for the Facility were modeled for pollutant loadings as "Roof Industrial". Source data is from Table B.5 as attached in the Urban Stormwater Retrofit Practices. TSS data is from the Industrial Roof land use, while copper and zinc concentrations were modified to the commercial roof land use. Commercial roof category was determined to be more accurate to reflect use of non-galvanized or copper roofing proposed by the Facility.

2. Driveways, parking areas, and pollution generating surfaces within the industrial yards such as mechanical and electrical equipment were modeled for pollutant loadings as "Parking Industrial". Source data is from Table B.5 of the attached Urban Stormwater Retrofit Practices.

3. Non-Pollution generating surfaces (background water quality) were modeled for pollutant loadings as "Industrial Yard". Source data is from Table 2 of the Terminal 4 Pond Particle Size Distr bution and Sample Analysis. TSS, and Total Zinc data was averaged from the four values for sample locations 1D and 1A. Copper was assumed to match Industrial yard/parking data from the Urban Stormwater Retrofit Practices. The Total copper values from the Terminal 4 Pond Particle Size Distribution and Sample Analysis was determined to be artificially high resulting from the test sample of 78 ug/L. An average of the remaining three values would yield 32 ug/L, less than what is assumed for these calculations.

4. Landscaping areas modeled for pollutant loadings as Landscaping. Source data is from Table B.5 of the attached Urban Stormwater Retrofit Practices.

5. Sidewalks and Pedestrian areas were modeled for pollutant loadings as "Driveway" areas. Source data is from Table B.5 of the attached Urban Stormwater Retrofit Practices.

6. Containment Area were modeled for pollutant loadings as "Tesoro Anacortes Stormwater". Source data is from Tables 4.1 and 4.3 "Storm Water to Ponds" from the attached Effluent Plant Treatment Efficiency Study and Engineering Report dated April 26, 2000.

7. Data in these fields were modified from default categories. See discussion of modifications in the land use descriptions and source data in Notes 1 through 6 above.

Descriptions of each treatment unit are included in the discussions of the relevant areas of the Facility. Detailed calculations are provided in Appendix H.

7.2.1 Area 200 – Unloading and Office

Stormwater from Area 200 will be discharged to the port's existing stormwater system in Terminal 5. Treated stormwater from the Facility will flow through the existing system to the stormwater pump station which pumps stormwater from Terminal 5 to treatment lagoons. To demonstrate water quality compliance, stormwater from the site will meet water quality discharge benchmarks at the Facility's connection to the port's stormwater system.

Stormwater will be discharged from Area 200 at three locations. Monitoring manholes are provided at all three connection points.

- The western connection (Discharge Location 1)will consist of runoff from the administration/support, West Boiler area, and the western half of the yard and roof from the rail unloading area.
- The central connection (Discharge Location 2) consists of runoff from the eastern half of the yard, rail spur, and a portion of the runoff from the Vanexco Cap drainage system.
- The eastern connection (Discharge Location 3) consists of stormwater collected from the eastern half of the rail unloading roof, runoff from NGL Supply, and the other portion of the Vanexco Cap drainage system.

The rail unloading facility directs stormwater only from its pollution-generating surfaces to the western and central connections. Treatment vaults will be provided at both locations and the proposed monitoring points are located immediately downstream of the vaults.

7.2.1.1 Water Quality Vault 0200-WQV-001

Stormwater contributing to water quality vault 0200-WQV-001 is generated from the office and administration area, the West Boiler, and the western portion of the rail unloading area. The following table summarizes the surface coverage contributing to the water quality vault for modeling with the WWHM. Stormwater is discharged from the water quality vault to Monitoring Point 1.

Table 24. Contributing Area to Water Quality Vault 0200-WQV-001

Surface Description	Existing Condition	WWHM Type	Area (acres)
West Boiler, Admin/Support Area, and West Portion of Industrial Yard			
Parking and Drive Aisle	Untreated Impervious	Roads/Flat	0.91
Buildings	Untreated Impervious	Roof Tops/Flat	0.17
Sidewalk/Walkways	Untreated Impervious	Sidewalks/Flat	0.02
Industrial Yard	Untreated Impervious	Parking/Flat	0.17
Landscaping	Untreated Impervious	A/B, Lawn, Flat	0.00
Total (West Boiler & Unloading and Office)			**1.27**

Stormwater modeling indicates that the water quality vault will need to treat an online flowrate of 0.20 cfs. Based upon the anticipated pollutant loading to this unit, a water quality vault containing media consisting of Metal Rx has been designed. Assuming a flow rate of 1 gpm/square foot of media, and an 18-inch media cartridge, a total of 12 cartridges is required to provide necessary water quality treatment.

The selected water quality vault will be a StormFilter vault provided by Contech Engineered Solutions with MetalRx media sized at a 1 gpm/square foot media surface area using 18-inch cartridges. The proposed vault currently includes provision for a total of 20 cartridges. Anticipated influent loadings, effluent concentrations for Monitoring Point 1 are summarized in the table below.

Table 25. Terminal 5 - Area 200 Monitoring Point 1 Summary

Pollutant	Influent Concentration	Effluent Concentration	Proposed Water Quality Standard
Oil and Grease	No visible sheen	No Visible sheen	15 mg/L
TSS (mg/l)	178	26.8	30
BTEX (ug/L)	<100	<100	100
Benzene (ug/L)	<1.2	<1.2	1.2
Total Copper (ug/L)	31.1	12.4	14
Total Zinc (ug/L)	217.3	86.9	117
Ethylbenzene (ug/L)	<1	<1	--
Toluene (ug/L)	<1.2	<1.2	--
pH	6	6	6.0-9.0

7.2.1.2 Water Quality Vault 0200-WQV-002

Stormwater contributing to water quality vault 0200-WQV-002 is generated from the eastern portion of the rail unloading area. The following table summarizes the applicable surface coverage contributing to the water quality vault for modeling with the WWHM. Stormwater is discharged from the water quality vault to a Monitoring Point 2.

The rail spur that is identified for on-site railcar and locomotive maintenance is located upstream of 0200-WQV-002. The area is part of the 1.25-acre industrial yard classification and has been modeled as fully impervious. The approximate 0.3-acre area is not anticipated to have an impact on downstream water quality. Rail containment pans and concrete surfacing will direct any stormwater through an oil-water separator that is designed for the 100-year, 24-hour storm event. A containment valve that will be closed during maintenance activities will prevent the inadvertent release of any spill. Significant operational BMPs are required in the attached operations SWPPP, including inspection of vehicles upon arrival, use of temporary spill prevention BMPs and drip pans, draining of all liquid containing parts, covered secondary containment leak proof containers for storage, and haul off of any waste liquids, including oils and lubricants.

Table 26. Contributing Area to 0200-WQV-002

Surface Description	Existing Condition	WWHM Type	Area (acres)
East Portion of Industrial Yard			
Sidewalk/Walkways	Untreated Impervious	Sidewalks/Flat	0.04
Industrial Yard	Untreated Impervious	Parking/Flat	1.25
Buildings	Untreated Impervious	Roof/Flat	0.05
Mechanical Equipment	Untreated Impervious	Roads/Flat	0.03
Total			**1.37**

Stormwater modeling indicates that the water quality vault will need to treat an online flowrate of 0.22 cfs. Based upon the anticipated pollutant loading, a water quality vault containing MetalRx media is designed. Assuming a flow rate of 1 gpm/square foot of media, and an 18-inch media cartridge, a total of 14 cartridges will be required to provide necessary water quality treatment.

The selected water quality vault will be a StormFilter vault provided by Contech Engineered Solutions with MetalRx media sized at a 1 gpm/square foot media surface area using 18-inch cartridges. The proposed vault currently includes provision for a total of 20 cartridges. Anticipated influent loadings, effluent concentrations for Monitoring Point 2 are summarized in the table below.

Table 27. Terminal 5 - Area 200 Monitoring Point 2 Summary

Pollutant	Influent Concentration	Effluent Concentration	Proposed Water Quality Standard
Oil and Grease	No visible sheen	No visible sheen	10 mg/L
TSS (mg/l)	98.2	14.7	30
BTEX (ug/L)	<100	<100	100
Benzene (ug/L)	<1.0	<1.0	1.2
Total Copper (ug/L)	32.6	13.0	14
Total Zinc (ug/L)	154.1	61.6	117
Benzene (ug/L)	<1.	<1.	1.0
Ethylbenzene (ug/L)	<1	<1	--
Toluene (ug/L)	<1.2	<1.2	--
pH	6	6	6.0-9.0

There is no publicly available data to characterize the existing stormwater pollutants that are currently collected atop the Vanexco Cap, or in the drainage system downstream of NGL Supply and Old Lower River Road. The facility is proposing to re-route the existing stormwater flows through the Facility area, and preserve the ultimate drainage patterns into the downstream system. The Facility will discharge the roof runoff from the eastern portion of the rail unloading building into this drainage system. However, because no Facility-related pollution-generating surfaces are proposed to contribute to this drainage system, treatment systems are not proposed.

7.2.2 Area 300 – Storage

Stormwater from Area 300 will be discharged to the Port's existing stormwater system in Terminal 4. A separate project will separate Port tenant stormwater from the port's general use areas, resulting in tenant stormwater bypassing the Terminal 4 stormwater treatment pond. Stormwater from the site must meet water quality discharge benchmarks at the Facility's connection to the port's stormwater system.

Stormwater is discharged from Area 300 at two connection points, both installed with monitoring manholes upstream. The location of the western connection (identified as Discharge Location 4) is the only connection at Area 300 in which stormwater from the pollution-generating surfaces is discharged after treatment. The eastern connection (Discharge Location 5) handles roof runoff from the two easternmost product storage tanks.

Treatment for this area consists of oil-water separation, volatile organics (BTEX) treatment, and a water quality vault to achieve water quality standards.

The water quality vault is a StormFilter vaults provided by Contech Engineered Solutions. The vault will be equipped with ZPG media sized at a 1 gpm/square foot media surface area. The BTEX treatment vault is equipped with GAC and the other vault will contain GAC sized at a 1 gpm/square foot media surface area.

7.2.2.1 Containment Area Oil Water Separators: 0300-OWS-001 AND 0300-OWS-002

Stormwater from the containment area will be collected through spill trapped catch basins and processed through an API-baffle-style control structure prior to reaching the oil-water separators. The oil-water separators are designed to separate oil particles down to 60-microns. The design assumed an API gravity of 12 degrees, which has a specific gravity of 0.986. API 12 is considered a medium weight crude, lighter crudes have higher API degree classifications. Crude oils with higher API gravities, such as Bakken Crude, separate more quickly and reduce particle size even more. The design of the system assumed

that no reduction of volatile organics, such as BTEX, occurs through the oil-water separators. The detailed calculations for the oil-water separators are attached in Appendix G.

7.2.2.2 Containment Area BTEX: 0300-WQV-002

Stormwater discharging from the containment area may be subject to minor drips from valve maintenance and flanges. Stormwater constituents from the containment area were developed from a sample facility report provided to Ecology as part of the treatment system efficacy study completed by Tesoro for its Anacortes refinery. Although stormwater from that containment area showed BTEX results compliant with the water quality limit without treatment, treatment is proposed at this Facility to address concerns raised by agency staff.

The removal rates of BTEX through GAC are well documented. GAC is used in industrial and residential applications to treat volatile organics in drinking water. The removal rates of BTEX in GAC is a logarithmic function with the best removal rates occurring at higher influent concentrations, and diminishing at low concentrations. On average, the GAC removal efficiency at the human health criteria of 1.2 µg/L is approximately 40 percent. Also, removal of BTEX is shown to be far more effective than doubled when GAC is used in sequence. For this reason, GAC is proposed in in the first water quality vaults downstream of the containment area. The second water quality vault includes ZPG media system, which contains a percentage of GAC in its media. The following table summarizes the contributing area to 0300-WQV-002

Table 28. Contributing Area to 0300-WQV-002

Surface Description	Existing Condition	WWHM Type	Area (acres)
Containment Area Stormwater			
Containment Yard Area	Untreated Impervious	Roads/Flat	12.0

Flowrates leaving the containment area are restricted to a maximum of 880 gpm at the control structure and at the discharge pumps. This flow rate is used to size the BTEX 0300-WQV-002. Assuming a flow rate of 1 gpm/square foot of media, and a 27-inch media cartridge, a total of 79 cartridges is required to provide necessary water quality treatment.

The selected water quality vault will be a StormFilter vault provided by Contech Engineered Solutions with GAC media sized at a 1 gpm/square foot media surface area using 27-inch cartridges. The proposed vault currently includes provision for a total of 87 cartridges.

7.2.2.3 Storage Area Water Quality Vaults: 0300-WQV-001

Stormwater contributing to water quality vaults 0300-WQV-001 is generated from the containment area and the parking/support area of the Storage Area. The following table summarizes the applicable surface coverage contributing to the water quality vault for modeling with the WWHM. Stormwater is treated through both of the water quality vaults in series. Discharge from the water quality vaults is routed to a Monitoring Point 3 for water quality compliance monitoring.

Table 29. Contributing Area to 0300-WQV-001

Surface Description	Existing Condition	WWHM Type	Area (acres)
Containment Area Stormwater			
Containment Yard Area	Untreated Impervious	Roads/Flat	11.96
Storage Area - Support Buildings, Parking, and Industrial Yard			
Landscaping	Untreated Impervious	A/B, Lawn, Flat	0.36
Support Buildings	Untreated Impervious	Roof Tops/Flat	0.09

Surface Description	Existing Condition	WWHM Type	Area (acres)
Sidewalks	Untreated Impervious	Sidewalks/Flat	0.05
Parking Area /Drive Aisle	Untreated Impervious	Roads/Flat	0.57
Industrial yard	Untreated Impervious	Parking Flat	0.57
Total			**13.60**

Stormwater modeling indicates that the water quality vault will need to treat an on-line flowrate of 2.13 cfs. Based upon the anticipated pollutant loading the unit contains ZPG media composed primarily of zeolite, perlite, and granulated active carbon. Assuming a flow rate of 1 gpm/square foot of media, and a 27-inch media cartridge a total of 85 cartridges are required to provide necessary water quality treatment.

The selected water quality vault will be a StormFilter vault provided by Contech Engineered Solutions with ZPG media sized at a 1 gpm/square foot media surface area using 27-inch cartridges. The proposed vault currently includes provision for a total of 87 cartridges. The product received its General Use Level Designation for Basic (TSS) treatment from Ecology in January 2013. Anticipated influent loadings, effluent concentrations for Monitoring Point 3 are summarized in the table below.

Table 30. Area 300 – Monitoring Point 3 Summary

Pollutant	Influent Concentration	Effluent Concentration	Proposed Water Quality Standard
Oil and Grease	No visible sheen	No Visible sheen	10 mg/L
Total Suspended Solids (TSS) (mg/l)	35.1	8.8	30
BTEX (ug/L)	<100	<100	100
Benzene (ug/L)	1.1	0.83	1.0
Total Copper (ug/L)	9.2	5.5	14
Total Zinc (ug/L)	573	34.4	117
Ethylbenzene (ug/L)	0.9	0.7	–
Toluene (ug/L)	1.1	0.8	–
pH	6.0	6.0	6.0-9.0

7.2.2.4 Pump Basin Oil Water Separator: 0300-OWS-003

Stormwater from the pump basin will be collected in a sump located in the southwest corner. A containment valve will be closed during all maintenance operations. Under normal operations, flow from the basin will be processed through a coalescing plate oil-water separators. The oil-water separator was selected for the 25-year flow. Discharges from the oil-water separator are to the City's sanitary sewer.

7.2.3 Area 400 – Marine Terminal

Stormwater from Area 400 will be discharged to the port's existing biofiltration and bioinfiltration swales. Due to the proximity to the Columbia River and shallow depths to groundwater, treatment will be provided in advance of the swales. Water quality monitoring is not readily feasible through a monitoring manhole for the portion of the site that sheet flows through the media filter drain into the bioinfiltration swales. The area of most concern for water quality is the stormwater from the containment area located at the dock. A monitoring manhole will be provided upstream of the discharge location to the biofiltration swales.

Treatment for this area will consist of media filter drain for the upland parking and drive aisle areas, and oil-water separation and water quality filters for the dock area. Note that in the event of a spill or discharge into the containment area, the spilled product will be cleaned and disposed of through the spill

response program. Treatment in this area is solely for normal operations in which all spill prevention measures are functioning properly.

Dock Containment Area: 0400-OWS-001

Stormwater from the containment area will be collected through sumps and inlets located at the face of the dock. Gravity pipelines will transfer stormwater from the containment area to the treatment units onshore. Containment valves at the face of the dock will be closed during all loading operations. When loading operations are complete or if a vessel is not berthed at the Facility, the valves will remain open. If there is a visible sheen on the water surface following loading activities, spill containment measures will be used to clean up the oil residues before the release of the captured stormwater.

Stormwater from the containment area will be processed through a coalescing plate oil-water separator. The oil-water separator was selected for the 25-year flow. Discharges from the oil-water separator are to the downstream water quality vault. The detailed calculation for the oil-water separator is attached in Appendix I.

Marine Terminal Water Quality Vault: 0400-WGV-001 and 0400-WQV-002

Stormwater contributing to the water quality vault is directly from the oil-water separator above. The following table summarizes the applicable surface coverage contributing to the water quality vault for modeling with the WWHM. Discharge from the water quality vault is routed to a small pump station, which discharges to a monitoring manhole for water quality compliance monitoring.

Table 31. Contributing Area to 0400-WQV-001 and 0400-WQV-002

Surface Description	Existing Condition	WWHM Type	Area (acres)
Marine Terminal – Containment Area			
Loading Containment Area	Untreated Impervious	Roads/Flat	0.09
Total			0.09

Stormwater modeling indicates that the water quality vault will need to treat an on-line flowrate of 0.02 cfs. Based upon the anticipated pollutant loading concerns from the T-dock containment area two water quality vaults are designed; the first the unit containing ZPG media composed of zeolite, perlite and granulated active carbon and the second unit containing GAC. Assuming a flow rate of 1 gpm/square foot of media, and an 18-inch media cartridge, a total of 2 cartridges per vault are required to provide necessary water quality treatment.

The selected water quality vaults will be a StormFilter vault provided by Contech Engineered Solutions with ZPG and GAC media sized at a 1 gpm/square foot media surface area using 18-inch cartridges. The currently proposed vaults include provisions for a total of 4 cartridges each. The product received its General Use Level Designation for Basic (TSS) treatment from Ecology in January 2013.

Stormwater from the dock containment area at the Marine Terminal will be treated with the above BMPs. The media filter received its General Use Level Designation for Enhanced treatment from Ecology in February 2013. Anticipated influent loadings, effluent concentrations for Monitoring Point 4 are summarized in Table 32 below.

Table 32. Marine Terminal Area 400 Monitoring Point 4 Summary

Pollutant	Influent Concentration	Effluent Concentration	Proposed Water Quality Standard
Oil and Grease	No visible sheen	No Visible sheen	No Visible Sheen
Total Suspended Solids (TSS) (mg/l)	23.7	3.6	-
BTEX (ug/L)	<100	<100	100
Benzene (ug/L)	1.2	0.7	1.2
Total Copper (ug/L)	6.4	3.2	-
Total Zinc (ug/L)	43	21.5	-
Ethylbenzene (ug/L)	1.0 ug/l	0.6	--
Toluene (ug/L)	1.2 ug/l	0.7	--
pH	6.0	6.0	6.0-9.0

Stormwater from the tenant improvement areas at the Marine Terminal will sheet flow to the media filter drain for treatment. The media filter received its General Use Level Designation for Enhanced treatment from Ecology in February 2013.

7.2.4 Area 500 – Transfer Pipelines

Facility-specific stormwater systems and treatment are not proposed for the transfer pipeline area. The transfer pipelines will be located in a non-exclusive easement and are considered to be located in the port's general use area. Spill traps will be installed in all immediately adjacent stormwater inlets along the alignment. Treatment for these areas will be provided by the port's system and permitted under the port's existing stormwater permits discussed in section 1.4.1.

7.2.5 Area 600 – West Boiler

Treatment for the West Boiler will be provided further downstream in Area 200. See section 7.2.1 for details.

7.2.6 Rail Infrastructure

Facility-specific stormwater systems and treatment are not proposed for the rail infrastructure. The rail corridor will be located within the port's existing rail transportation corridor, which was master-planned as part of the WVFA project. A stormwater analysis and report completed for that project is attached in Appendix D. Collection, conveyance, and treatment systems were constructed and/or reviewed as part of that project. Spill traps will be installed in all immediately adjacent stormwater inlets along the alignment. Treatment for this area will be provided by the Port's system and permitted under the existing permits discussed in Section 1.4.1.

7.3 Site Suitability

The site as designed is suitable for the proposed transload facility. The extensive source controls and treatment technologies employed can provide stormwater quality meeting the anticipated discharge requirements. Additional structural and operational oil and hazardous material spill control and prevention measures are discussed in section 6. Site-specific operations and construction SWPPPs have also been completed.

7.4 Treatment Process Operation

The treatment processes proposed during Facility operation are designed to be passive systems. Passive systems are designed to require minimal operational input and rely upon hydraulics to provide treatment. Due to the passive systems selected, no process operational procedures are required. The proposed sampling and monitoring plan is included in the operations SWPPP submitted under separate cover. Detailed discussions of how the treatment BMPs will operate and of the required maintenance activities are provided with the operations SWPPP.

7.5 Treatment Bypasses

To the maximum extent possible, the proposed treatment systems are designed using on-line water quality flow rates and volumes, and have been placed in-line with the stormwater flow. The design of the water quality vaults considered high-flow rates to ensure that the 100-year design storm could be conveyed safely through the structures. Even during design storms in excess of the water quality storm, the filter vault will continue to treat the water quality storm flow rate.

The only sources of stormwater not directed toward water quality treatment units are:

- Storage tank roof runoff
- Rail unloading facility roof
- Small portions of on-site landscaped areas
- Off-site stormwater from the Vanexco Cap
- Off-site stormwater from NGL Supply propane terminal
- Driveway areas immediately adjacent to roadways where the grade did not permit on-site flow

The sources above consist primarily of on-site non-pollution generating surfaces which do not require treatment, landscaped areas which naturally flow to adjacent parcels, previously installed adjacent tenant stormwater, and minor use driveway areas infeasible to collect stormwater on site. All of the pollution-generating surfaces located within the control of the Facility are treated on site prior to discharge.

8. Operational Quantity and Quality of Industrial Water and Process Wastewater

This section summarizes the design of the industrial water and process wastewater system, including a description of the water supply, use, pretreatment, and discharge locations. The downstream municipal conveyance and treatment systems are discussed in detail in section 13. A process flow diagram for the process water uses and wastewater is shown in Figure 9.

8.1 Water Supply

The Facility will require a water supply for process water and emergency fire suppression water. The Applicant proposes to obtain all water required for the Facility from the City's water utility. The Facility would not require the development of new water sources. The City's existing water distribution facilities are adjacent to or located on the site. The Facility would connect to the City's existing water distribution network and multiple water service connections would be constructed to serve the discontinuous Facility areas. These water supply connections would be constructed in accordance with the City's water design and construction requirements. Necessary water metering and cross-connection control would be installed at each of the connection locations between the on-site water facilities and the public water distribution system. Figure 10 illustrates the existing City water distribution network at the Facility site.

Copyright © BergerABAM. All Rights Reserved.

C.2 PROCESS SCHEMATIC FOR WASTEWATER DISCHARGES

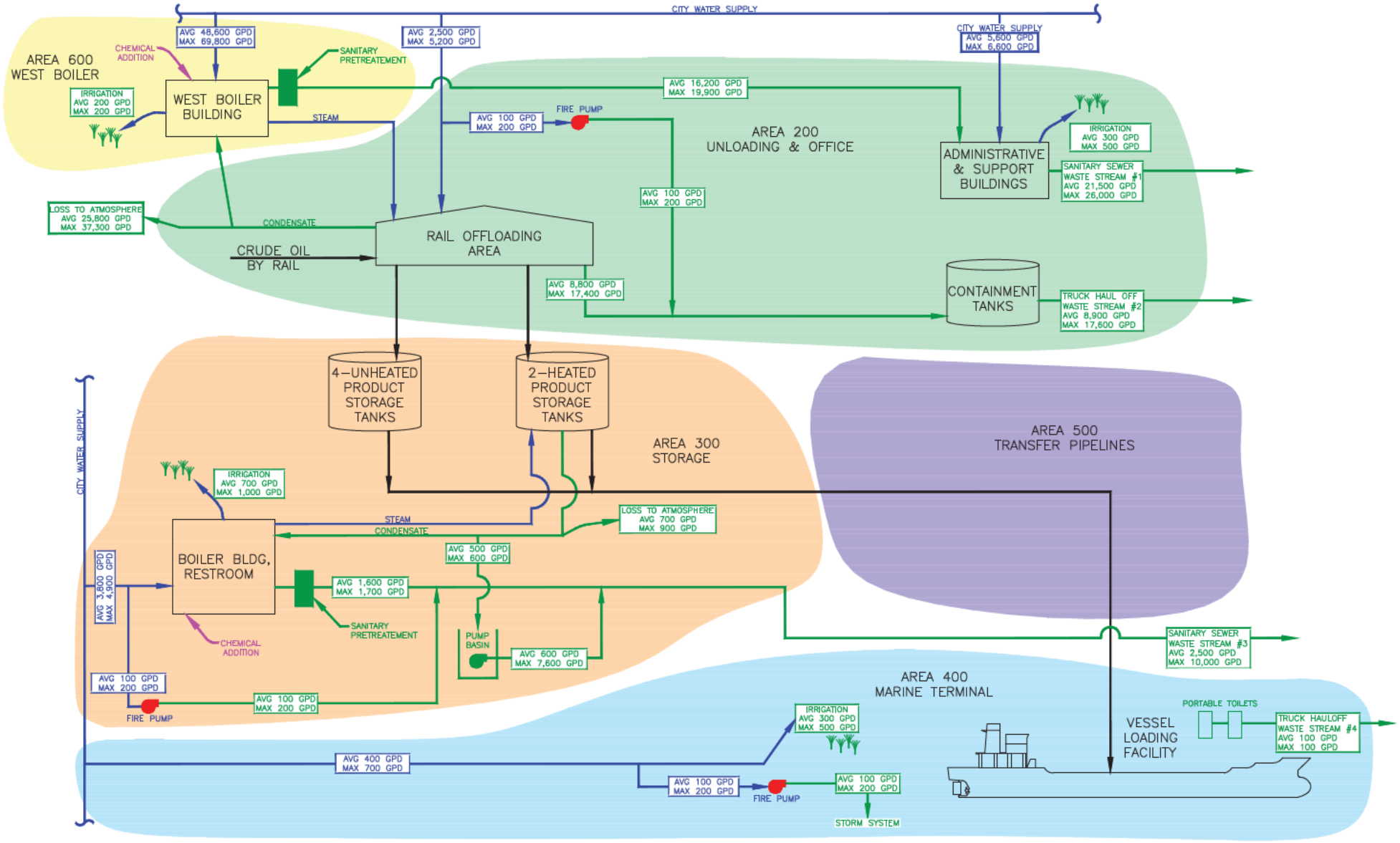

Last Saved by: Tony.pritchett on: Aug 20, 2013 2:57 PM File: Q:\Vancouver\2013\A13.0267\CADD\Dwgs\PRE-APP\PROCESS SCHEMATIC - WASTEWATER DISCHARGES.dwg

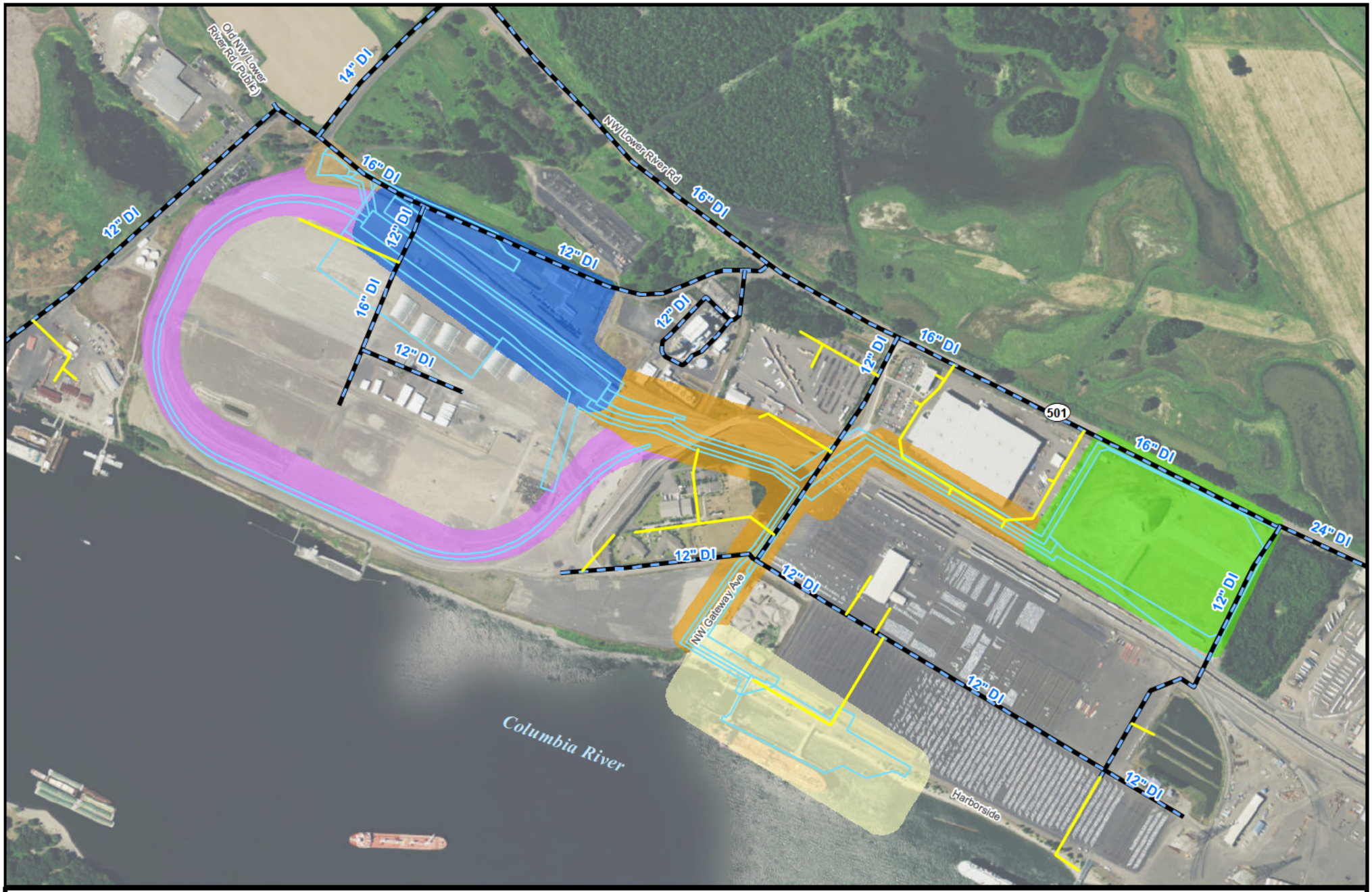

LEGEND

- Site Boundary
- Transmission Mains
- Distribution Mains

Vancouver Energy Improvement Areas

- 200 - Unloading and Office
- 300 - Storage
- 400 - Marine Terminal
- 500 - Transfer Pipelines
- 600 - West Boiler
- Rail Infrastructure

Figure 10. City of Vancouver Water System

N

0 500 1,000 1,500 2,000 Feet

8.2 Process Water

Industrial processes at the Facility are limited to the transfer and storage of crude oil. Process water use at the Facility would consist of water required at Area 600, West Boiler, miscellaneous part and equipment wash, and cooling water used during operation of the fire suppression pumps. The anticipated maximum process water demand per day is approximately 52.2 gpm. Table 33 summarizes water use locations and rates for the Facility. The annual water usage would vary based on the density and viscosity of the raw crude oil, the volume of crude requiring heat, and ambient air temperatures (lower ambient temperatures would require higher water usage).

Table 33. Process Water uses and Usage Rates

Industrial Process	Average Water Use (gpd)	Maximum Water Use (gpd)
Area 200		
Miscellaneous part/equipment wash[a]	2,400	5,000
Fire pump[b]	100	200
Area 300 fire pump[b]	100	200
Area 400 fire pump[b]	100	200
Area 600 boiler building	48,400	69,600
Total process water	51,100	75,200

[a] Pressure washer rated at 5 gpm, with conservative usage assumptions.
[b] Averaged considering weekly 30-minute maintenance cycling at 35 gpm, and annual pump testing.

The boiler plant in Area 600 would provide steam to heat certain grades of crude oil within the railcars. The majority of the process water used to make steam would be maintained in a closed-loop system. However, some process water for the boilers would be necessary for makeup water to replenish the equivalent of steam lost in the system, blowdown water, cooling water, and treatment of the input municipal water to boiler use specifications.

Area 200 (Unloading and Office), Area 300 (Storage), and Area 400 (Marine Terminal) would be protected with emergency fire pumps. These pumps would be equipped with a heat exchanger and cooling water supply to maintain operational engine temperatures. Fire pumps would be maintained on a weekly basis and tested once a year to ensure operability for fire response. Occasional make-up water is necessary during fire pump maintenance cycling.

8.3 Process Wastewater

The Facility would generate approximately 19 gpm of process wastewater from primarily boiler and condensate blowdown. Depending on its source, process wastewater would be either: collected, stored on site, and hauled to an approved disposal location; treated and discharged to stormwater; or pretreated and discharged to the City's sanitary sewer.

New wastewater sources would be connected to the existing public sanitary sewer via a combination of new gravity and pressure sewer lines. Discharge to the City sewer would occur at two locations—one source, located just north of the administrative and support buildings (Area 200), would discharge into an existing 18-inch-diameter gravity sewer; and a second, located just south of the Area 300 (Storage), would discharge into an existing 18-inch-diameter gravity sewer. All process wastewater discharged from the Facility into the City's sanitary sewer system would undergo pretreatment to ensure compliance with the City's pretreatment program. Table 34 summarizes the process wastewater sources.

Table 34. Process Wastewater Sources

Wastewater Stream	Average Water Use (gpd)	Maximum Water Use (gpd)
Area 200		
Miscellaneous part/equipment wash	2,400[a]	5,000[a]
Fire pump cooling water	100[a]	200[a]
Area 300		
Pump basin sump effluent	100[b]	7,000[b]
Fire pump cooling water	100	200
Area 400 fire pump cooling water	100[a]	200[a]
Area 600 boiler building effluent	16,200	19,900
Sanitary wastewater total process wastewater	**19,000**	**32,500**
Total process wastewater to sanitary sewer	**16,400**	**27,100**

[a] Process water discharged to stormwater system for treatment or stored onsite and hauled offsite for disposal.

[b] Waste flows from this basin are calculated assuming (at this time) that the basin is not covered. Average day flows were calculated distributing the annual rainfall total of 38.9 inches per year to determine gallons per day. Maximum rainfall was calculated using the 100-year storm rainfall event of 4.5 inches per day.

Final treatment of all process wastewater discharged from the Facility to the public sanitary sewer would be done at the City's existing wastewater treatment plant. No treatment process modifications at the wastewater treatment plant would be necessary to accommodate the proposed Facility. On-site pretreatment would be conducted per the requirements of the City's industrial wastewater pretreatment ordinance VMC 14.10.110. Process wastewater streams requiring pretreatment include blowdown and condensate discharges from the Area 600 boilers. Pretreatment processes for these waste streams would be designed and furnished by the boiler manufacturer in accordance with industry practices.

8.3.1 Area 200 Miscellaneous Part/Equipment Wash

Miscellaneous part and equipment washing would be conducted in a designated area located in Area 200 (Unloading and Office). Wash water would be generated from a single 5-gpm pressure washer and would be collected and conveyed to the containment tanks at the unloading facility. Contents of the containment tanks would be discharged to a mobile vacuum truck and taken to an approved facility for recycling or disposal. This wash water includes an allowance for possible railcar exterior washing as described in section 6.1.6.

Intermittent non-process wastewater originating from within the unloading area could include rainwater that enters the structure from railcars and is blown in at the sides, entry and exits, and fire retardant foam released by the fire suppression system during routine maintenance. Containment drip pans and secondary containment trenches would be installed between, and adjacent to, the tracks of the railcar unloading structure to capture any rainwater, inadvertently released oil, and fire retardant, and would be directed to sump pumps installed at low points within each containment trench. The sump pumping system would transfer such non-process wastewater to the unloading facility containment tanks where it would be removed by a vacuum truck or pumped out of the tanks and hauled off site to a licensed and approved disposal facility.

As noted previously, flexible vent hoses connected to a valve at the top of the car would be used to collect vapors as crude oil drains from the car to the collection header. These vapors, and any condensate they may contain, would be returned to the tank car, and would not be discharged to any process water streams.

8.3.2 Area 600 Boiler Effluent

The Area 600 boiler plant is expected to produce continuous blowdown when in operation, with discharge flow rates fluctuating depending on steam demand. There will be three 1,500 boiler horse power (BHP) boilers with one on standby. The two boilers operating will generate approximately 103,500 pounds per hour of steam. The discharge values are based upon the maximum discharge condition, which is based upon a 4 percent boiler blowdown rate with 25 percent steam condensate lost. With those values, the the maximum day discharges are as follows.

- Water usage: 69,640 GPD
- Discharge to Sanitary Sewer: 19,940 GPD
- Loss to Atmosphere (steam): 37,275 GPD
- Condensate Discharge for Haul Off: 12,425 GPD

Blowdown temperature at the boiler plant would be lowered to permit allowable levels with a cooling system that uses potable water as the coolant. Coolant water would be mixed along with the boiler blowdown. The approximate constituent concentrations in the boiler effluent process wastewater are summarized in the tables below. A small sanitary sewer pump station is necessary to convey wastewater from the west boiler building in Area 600 to the discharge location near the administrative and support buildings in Area 200.

Table 35. Anticipated Effluent Constituents

Parameter	Minimum	Maximum
Conductivity	1,000 mmhos	1,200 mmhos
pH	8	12
Nitrate + Nitrite-N as N	<0.52 mg/L	<1 mg/L
Calcium	0.5 mg/L	125 mg/L
Chloride	9.3 mg/L	6,000 mg/L
Sodium	5,880 mg/L	6,000 mg/L
Sulfate	0.72 mg/L	15 mg/L
Barium	-	<0.4 mg/L
Cadmium	-	<0.04 mg/L
Chromium	-	<0.01 mg/L
Copper	0.2 mg/L	4 mg/L
Lead	<0.2 mg/L	<0.2 mg/L
Molybdenum	<0.1 mg/L	<0.1 mg/L
Nickel	<1 mg/L	<1 mg/L
Zinc	0.2 mg/L	0.2 mg/L

Actual effluent testing has not been completed for this project. The anticipated supplier of boiler plant conditioning chemicals and pretreatment supplier reviewed the City of Vancouver's domestic water constituents and conducted an analysis to determine approximate effluent water quality. The results of that analysis for the boiler blowdown and softener backwash are summarized below.

Table 36. Detailed Effluent Analysis Summary

Parameter	Boiler Blowdown	Softener Backwash	Units
Ph	10.2	8	
Conductivity	1,200	1,000	Mmhos

Parameter	Boiler Blowdown	Softener Backwash	Units
Alkaklnity	336	120	mg/L
Hardness	14	500	mg/L as $CaCO_3$
Polyacrylate	250	0	mg/L
Aluminum	<0.1	<0.1	mg/L
Barium	<0.4	<0.4	mg/L
Boron	<0.1	<0.1	mg/L
Bromide	<0.2	<0.2	mg/L
Cadmium	<0.04	<0.04	mg/L
Calcium	0.5	125	mg/L
Chloride	9.3	6,000	mg/L
Chromium	<0.01	<0.01	mg/L
Copper	4	0.2	mg/L
Iron	2	0.1	mg/L
Lead	<0.2	<0.2	mg/L
Lithium	<0.01	<0.01	mg/L
Magnesium	3	50	mg/L
Manganese	<0.01	<0.01	mg/L
Molymbdenum	<0.1	<0.2	mg/L
Nickel	<1	<1	mg/L
Nitrate	0.8	0.32	mg/L
Nitrite	<0.2	<0.2	mg/L
Phosphorus	1	1	mg/L
Potassium	59	59	mg/L
Silica	150	54	mg/L
Sodium	5,880	6,000	mg/L
Strontium	0.1	0.1	mg/L
Sulfate	15	0.72	mg/L
Sulfite	40	<0.2	mg/L
Vanadium	<1	<1	mg/L
Zinc	0.2	0.2	mg/L

Wastewater from the boiler will be treated and cooled as necessary to comply with the local, state, and federal pretreatment standards. As discussed in section 13, following treatment wastewaters will be discharged through small private pump station to Area 200. The wastewater will additionally be treated in Area 200 through an oil-water separator designed for the maximum flow. Following the oil-water separator process, wastewater will be comingled with the domestic sewer discharged from Area 200 in a monitoring manhole prior to discharge to the City's sewer collection system.

8.3.3 Area 300 Basin Sump Effluent

Area 300 would have a concrete pump basin equipped with a sump and discharge to sanitary sewer. Stormwater from the pump basin will be collected in a sump located in the southwest corner. A containment valve will be closed during all maintenance operations. Under normal operations, flow from the basin will be processed through coalescing plate oil-water separators. The oil-water separator was selected for the 25-year, 24-hour storm event. The gravity sewer extending from this basin will be treated through a coalescing plate oil-water separator prior to discharge. Equipment within the pump basin

includes pumps, piping, valving, and appurtenances necessary to transfer crude oil from the product storage tanks to Area 400.

8.3.4 Areas 200, 300, and 400 Fire Pump Cooling Water

Non-contact cooling water from the fire pumps would be discharged once a week during a 30-minute maintenance cycle. This water would be discharged from areas 200, 300, and 400 into containment tanks, the sanitary sewer, and stormwater system, respectively.

9. Domestic Water and Wastewater

This section summarizes the design of the domestic water and wastewater system, including a description of the water supply, use, and discharge locations. The downstream municipal conveyance and treatment systems are discussed in detail in section 13.

9.1 Water Supply

The Facility will require a water supply for potable water and other domestic uses. The Applicant proposes to obtain all water required for the Facility from the City's water utility. The Facility would not require the development of new water sources. The City's existing water distribution facilities are adjacent to or located on the site. The Facility would connect to the City's existing water distribution network and multiple water service connections would be constructed to serve the discontinuous Facility areas. These water supply connections would be constructed in accordance with the City's water design and construction requirements. Necessary water metering and cross-connection control would be installed at each of the connection locations between the on-site water facilities and the public water distribution system.

9.2 Potable Water

Potable water for the Facility is limited to the amount needed to serve general kitchen and restroom facilities at the administrative and support buildings (Area 200), future restrooms inside the storage building (Area 300), and landscaping irrigation at areas 200, 300, 400, and 600. Table 37 indicates potable water uses and rates. The maximum daily potable water demand is equivalent to the need for 10.3 gpm. The annual water usage would vary based on ambient air temperatures and rainfall, with lower ambient temperatures and higher rainfall requiring less irrigation water usage.

Table 37. Potable Water uses and Usage Rates

Industrial Process	Average Water Use (gpd)	Maximum Water Use (gpd)
Area 200 administrative and support buildings[a, b]	5,400	6,250
Area 300 storage building[b]	5,000	6,750
Area 400 future domestic[c]	800	1,250
Area 600 landscaping irrigation	500	650
Total potable water	11,700	14,900

[a] The volume of 35 gpd for industrial factory sewer rates is based on Table G2-2, Design Basis for New Sewage Works (Ecology 2008) with an additional 15 gpd.

[b] Assumption of 116 employees using facilities in Area 200, 4 employees in Area 300 with other sanitary uses, and 10 employees in Area 400 with other sanitary uses.

[c] Potable water use is conservatively inflated in areas 300 and 400 for possible reallocation of staffing resources over time.

9.3 Domestic Wastewater

The Facility would generate approximately 5 gpm of domestic wastewater. Domestic wastewater would be discharged to the City's sanitary sewer.

New domestic wastewater sources would be connected to the existing public sanitary sewer via a combination of new gravity and pressure sewer lines. Discharge to the City sewer would occur at two locations—one source, located just north of Area 200, would discharge into an existing 18-inch-diameter gravity sewer; and a second, located just south of the Area 300, would discharge into an existing 18-inch-diameter gravity sewer.

Domestic wastewater, which would be generated from administrative and support buildings in Area 200 and the storage building in Area 300, would consist primarily of domestic waste from kitchen/break room, restroom facilities, and shower areas. No pretreatment is proposed at these locations. Discharges from both the administrative and support buildings and the storage building restroom would be discharged directly to the sanitary sewer. Area 400 employees would use portable toilets located in that area. The wastewater from Area 400 would be hauled off site for treatment and disposal. Table 38 summarizes the daily flows from each of these sources.

Table 38. Domestic Wastewater Sources

Wastewater Stream	Average Water Use (gpd)	Maximum Water Use (gpd)
Area 200 administrative and support buildings	5,300	6,100
Area 300 storage building[b]	500	750
Area 400 domestic use[b]	500[a]	750[a]
Total domestic wastewater	6,300	7,600
Domestic wastewater to sanitary sewer	5,800	6,850

[a] Domestic wastewater stored on site and hauled off site for disposal.
[b] Wastewater production at areas 300 and 400 increased over assumed employee concentrations of 4 and 10, respectively, to allow for staffing reallocation in the future.

10. Oil and Hazardous Material Spill Control or Accidental Discharge Prevention

Draft spill pollution control and countermeasures and contingency plans were prepared and submitted to EFSEC as part of the permitting process. Updates to these plans will be provided as project design continues and additional site-specific data becomes available. The provisions discussed in these plans prevent and control material spills and accidental discharges of material to the storm drain system.

The primary protection against accidental discharges is conservative design with multiple failsafes to prevent and mitigate for possible equipment or operational malfunction. The systems are designed with equipment redundancy to mitigate for possible equipment malfunction, the conveyance pipelines and tanks are designed for pressures and temperatures in excess of anticipated operating ranges, and physical monitoring and telemetry devices are employed to provide operators with real-time data to ensure that the Facility operates as designed.

In the unlikely event of an accidental discharge or failure, containment and control measures will be in place to capture any discharge and mitigate its effects. Emergency stop buttons located in crucial parts of the operation will shut operations down either in the immediate area or plant-wide, depending on the severity of the incident. Automatic and manual valves will isolate sections of the plant to reduce the

amount discharged. Spill cleanup kits, booms, and absorbent material will be located throughout the Facility for quick deployment.

As discussed above, the Facility's storm system is additionally designed to capture and remove oils from the stormwater in the unlikely event that a discharge reaches the stormwater system before the spill control valves can be shut. Any spilled product or hazardous material will be collected, along with any contaminated media, and hauled off site for legal disposal.

11. Receiving Water Description

In accordance with the EFSEC letter dated 6 February 2014 directing the scope of this engineering report, the analysis is limited to the discharge location at the point at which the Facility connects the on-site stormwater system to the Port's existing system. A description of the downstream municipal treatment system is included in section 13. A complete description of the downstream stormwater system is included in section 1.4.1. The following is a brief description of the discharge locations for the downstream systems to the Columbia River.

11.1 Location of Discharge

The Terminal 4 stormwater system discharges to the Columbia River at a single outfall southeast of the Terminal 4 water quality pond at Berth 9. The Port's mapping identifies the outfall as T4O. Figure 3 shows its location.

The Terminal 5 stormwater system has two outfalls to the Columbia River. The outfall located immediately west of Berth 17 is an overflow to the port's on-site stormwater pump station and has capacity to serve a future tenant located at Berth 17. The pump station pumps on-site stormwater to existing treatment lagoons located west of Terminal 5. The outfall for the lagoons is located immediately south of the western edge of the lagoons. Figure 4 shows the location of the two outfalls.

11.2 Water Quality

Multiple government agencies and non-governmental organizations monitor water quality levels within the Columbia River. The U.S. Geological Service (USGS) is the federal agency responsible for conducting water quality testing in the Columbia River. In 2004–2005, the USGS conducted water column samples. Significant findings of the Water Quality Data, Columbia River Estuary 2004-05 report are summarized below.

- None of the aquatic-life or human health benchmarks established by the U.S. Environmental Protection Agency were exceeded.
- Concentrations of arsenic, copper, and lead were not present at levels of concern with regards to aquatic toxicity.
- Trace element concentrations were higher downstream than at the upstream reaches of the Columbia River.
- Eight of the 54 wastewater compounds analyzed were detected at least once, usually at trace levels. Bisphenol A was the only endocrine disruptor in wastewater compounds detected in the Columbia River.
- During seasonal samplings of suspended sediment no organochlorine compounds or polycyclic aromatic hydrocarbons (PAHs) were detected
- All 11 polybrominated diphenyl ether (PBDE) congeners were detected on suspended sediments, usually in trace amounts.
- 102 of the 209 PCB congeners were detected on suspended sediments, usually in trace amounts.

A copy of the report is available from the USGS at http://pubs.usgs.gov/ds/2006/213/#download. Additionally, the USGS report "Water Quality of the Lower Columbia River Basin: Analysis of Current and Historical Water-Quality Data through 1994" can be downloaded at http://or.water.usgs.gov/pubs_dir/Abstracts/95-4294.html.

11.3 Outfall Analysis

The scope of this report is limited to the location of the connection where the on-site stormwater will be discharged to the port's existing system. The outfall locations are described above in section 9.111.1. The existing outfalls are permitted under stormwater permits WAR000424 and WAR045201.

The Port has completed extensive development in terminals 4 and 5 and the construction of the downstream stormwater systems was master-planned to include the Facility areas. These plans assumed that the areas of this Facility will be developed with 100 percent impervious coverages. As shown, the Facility will use landscaping to reduce impervious coverage and, therefore, downstream capacities are not affected by this project.

The water quality benchmarks established by Ecology are proposed to be met at all discharge locations where stormwater from the Facility is in contact with pollution-generating surfaces. These permitted benchmarks are established to protect water quality.

12. Relationship to Existing Treatment Facilities

The Facility is not proposing to use downstream treatment facilities to achieve water quality benchmarks. Downstream treatment facilities are only necessary to treat stormwater from the general use areas as discussed throughout this report.

The Facility will discharge wastewater to the City's sanitary sewer system and the wastewater will be treated at the City's treatment plant. The remaining portion of sanitary and process water will be hauled off site and legally disposed of. Disposal companies collecting portable toilet waste from the Marine Terminal will take the waste to a municipal treatment plant for treatment. Contaminated wastes will be taken to local processing facilities that perform pre-treatment prior to discharging the waste to the sanitary sewer.

12.1 Terminal 4 Treatment Facilities

The Terminal 4 collection system collects and treats approximately 250 acres of industrial port land. Modifications were completed in October 2012 to the Terminal 4 water quality pond to increase its treatment capacity and efficiency. A project is currently under construction to further modify the stormwater system to separate stormwater from the project site and Farwest Steel from the port's stormwater. The project will bypass the Terminal 4 pond.

Portions of the transfer pipelines (Area 500) will continue to discharge to the port's collection and treatment system. The pipelines are considered non-pollution generating. No additional runoff or increase in pollutant loading to the Terminal 4 pond is anticipated.

12.2 Terminal 5 Treatment Facilities

Stormwater from Terminal 5, including areas 200 and 600 and the rail improvements, will discharge to the existing conveyance and treatment system installed in Terminal 5. The downstream water quality lagoons were constructed to treat industrial and stormwater runoff from the Evergreen/ALCOA smelter once located at the site.

A new stormwater system was installed as part of the site remediation that occurred during the decommissioning of the Evergreen/ALCOA facility. The analysis completed during design and engineering for the stormwater modification as well as for the rail improvements that were part of the WVFA project concluded that the lagoons do provide some level of treatment; however, the report (attached in Appendix D) does not quantify the level of treatment. Therefore, the Facility will meet discharge limits prior to discharging to the Port's system.

The rail improvements will continue to discharge to the port's collection and treatment system. The rail improvements that are part of this project are intended only to transport rail cargo, and will include no maintenance or washing facilities. No additional runoff or increase in pollutant loading to the Terminal 5 pond is anticipated beyond the currently designed capacities already assumed in the WVFA project.

12.3 Marine Terminal Treatment Facilities

The existing stormwater treatment and infiltration facilities located at the Marine Terminal will be used to treat and infiltrate the Facility's stormwater. The existing facilities provide treatment and disposal for 25 acres of contributing stormwater. The marine vapor control units will be constructed in a portion of one of the treatment swales, affecting approximately 120 feet of biofiltration swale.

To mitigate for the loss of treatment capacity, the Facility will install over 1,000 linear feet of media filter drain to provide treatment for the pollution-generating surfaces constructed at the Marine Terminal. The proposed treatment trade allows an additional 1.5 acres of existing contributing area to be treated. The total amount of contributing area to the infiltration system is not proposed to be increased.

Stormwater from the containment area at the dock will be collected and piped to an oil-water separator and water quality filters for treatment. The containment area includes sufficient storage for the required containment volume of three bbl. Discharges from the oil-water separator and treatment unit will be pumped to the treatment swales for final treatment prior to flowing into the infiltration swales.

13. Municipal Wastewater System Analysis

Sources of wastewater will include the boiler plant effluent, miscellaneous part and equipment wash, fire pump cooling water, and domestic sewage. Detailed descriptions of these wastewaters are summarized above in sections 8 and 9. Most wastewater sources will be connected to the City's public sanitary sewer system. Sanitary sewerage collected from within the port area will be conveyed to the City's wastewater treatment plant where it will be treated and discharged to the Columbia River under NPDES Permit No. WA0024350. All process wastewater discharged from the Facility to the City's sanitary sewer system will undergo pretreatment to ensure compliance with the City's pretreatment program.

A detailed analysis of the downstream sanitary sewer system is not included in this report. The City of Vancouver has reviewed the requested discharges and provided a letter (attached in Appendix M) stating that the downstream facilities have sufficient conveyance and treatment capacities for this project. The discharge of the process wastewaters to the City's treatment plant would typically require a State Waste Discharge Permit to Discharge Industrial Wastewater to a Publicly Owned Treatment Works. A completed Application for a State Waste Discharge Permit to Discharge Industrial Wastewater to a Publicly Owned Treatment Works and the City of Vancouver Industrial Information Form, as well as required supporting data, is attached to this report in Appendices K and L. This information was originally submitted to EFSEC as part of the ASC in section 5.2.

13.1 Conveyance System Capacity

The conveyance system in this portion of the City includes 18-inch diameter gravity sewer mains. The Facility submitted pre-application paperwork and detailed wastewater analysis to EFSEC as part of the ASC, which specified a maximum flow of 30 gpm. The gravity sewer will flow to a regional pump station located adjacent to the southeast corner of the proposed Storage Area.

The City reviewed a pre-application narrative which listed the wastewater discharges from the Facility at 30 gpm and indicated that the City's wastewater conveyance system has sufficient capacity to serve the project.

13.2 Treatment Plant Capacity

Maximum wastewater discharges to the City's sanitary sewer system by the Facility will account for less than 0.1 percent of the total treatment capacity of the City's wastewater treatment plant. The plant uses an activated sludge process, UV disinfection, and sludge incineration for treatment, and is rated for a maximum wet weather treatment capacity of 28.26 MGD. Current treatment plant maximum flow is listed in the most recent Ecology facility fact sheet dated 2003 as 17.4 MGD.

As stated above, the pre-application narrative reviewed by the City listed the wastewater discharges from the Facility at 30 gpm and the City indicated that its plant has sufficient wastewater treatment capacity to serve the project.

14. Sludge Disposal

All materials collected in the proposed treatment BMPs and resulting from routine maintenance – including sweepings, catch basins, sumps, pretreatment solids settling units, oil-water separators, and filter vaults – will be hauled off and legally disposed of.

Replacement of the water quality vault filter media and residue from cleaning coalescing plate cartridges will be completed under a maintenance agreement with the vendor or similar professionally qualified maintenance service. Solids and separated oils will be removed and hauled off site for legal disposal. Water quality facilities will be refilled with clean water to operational levels and commissioned according to the manufacturer's recommendations. A detailed description of the maintenance requirements is provided in the operations SWPPP submitted under a separate cover.

15. Ownership Operation and Maintenance Responsibility

The Facility is located on parcels that are owned by the Port. Applicant has entered into a lease with the Port for the exclusive use of the property located within the site boundary. A portion of the lease includes a non-exclusive easement for the transfer pipeline corridor. Applicant will be responsible for the operation, maintenance, and permit compliance for the proposed stormwater collection, conveyance, and treatment systems.

Applicant is a Delaware limited liability company that is qualified to do business in the state of Washington. Its members are Savage Companies and Tesoro Refining & Marketing Company LLC. Tesoro Refining & Marketing Company LLC is a subsidiary of Tesoro Corporation, which is a Fortune 150 company and an independent refiner and marketer of petroleum products. Savage Companies is a privately held operator that provides supply chain management solutions tailored to meet the needs of a variety of industries.

16. Compliance with State, Local, and Federal Water Pollution Regulations and Plans

The project is proposing to ensure compliance with state, local and federal water pollution regulations and plans by using structural BMPs to separate stormwater from the industrial activity and treatment units. The BMPs discussed in the preceding sections include schedules of activities, prohibitions of practices, procedures for maintenance, and structural and managerial practices that, when used singly or in combination, will prevent or reduce the release of pollutants and other adverse impacts to surface water.

To ensure compliance, the Facility has factored into its design all known, available, and reasonable methods of prevention, control, and treatment to prevent and control pollution. The following standards were used in the design and preparation of operations/management of the Facility.

16.1 Federal Standards

Federal Clean Water Act regulations, which include those implemented through the NPDES permits for stormwater and wastewater, are locally administered through Ecology. On 23 March 2007, the Port was issued an NPDES Western Washington Phase II Municipal Stormwater Permit for discharges of stormwater to surface waters through its municipal separate storm system.

16.2 State Standards

16.2.1 Statutes

Washington's requirements for surface water management are contained in the following statutes:

- Washington State Surface Water Quality Standards (WAC 173-201A)
- Ground Water Quality Standards (WAC 173-200)
- Sediment Management Standards (WAC 173-204)

16.2.2 Stormwater Management Manual

Ecology's stormwater manual is not a regulation, but it has been adopted by the City, and state permits require compliance with the manual. Additionally, stormwater management techniques applied in accordance with the manual are presumed to meet the technology-based treatment requirements of RCW 90.52.040 and RCW 90.48.010 – that the project provide all known available and reasonable methods of treatment (AKART), prevention, and control as required by RCW 90.52.040 and RCW 90.48.010.

Land-disturbing activity carried out by the project will trigger water quality improvements required by the City's NPDES Phase II permit. Therefore, minimum requirements 1 through 9 of the stormwater manual apply. The minimum requirements are listed below.

16.2.2.1 Minimum Requirement No. 1: Preparation of Stormwater Site Plans

Stormwater site plans have been prepared and are attached in Appendix C of this report. Stormwater site plans are required by Section 2.5.1 of the stormwater manual and must be prepared according to Chapter 3 of the manual and VMC 14.24, 14.25, and 14.26.

16.2.2.2 Minimum Requirement No. 2: Construction Stormwater Pollution Prevention

The Facility will result in more than 2,000 square feet of replaced hard surface and will disturb more than 7,000 square feet of land; stormwater pollution prevention, therefore, must be considered. To comply with this minimum requirement, a preliminary construction SWPPP has been submitted under separate cover.

16.2.2.3 Minimum Requirement No. 3: Source Control of Pollution

Identified sources of pollution are addressed with designed source control BMPs in accordance with the stormwater manual. Possible sources are identified and, where possible, eliminated during design. Remaining sources are mitigated with operational BMPs, and these are addressed in the operations SWPPP prepared under separate cover.

16.2.2.4 Minimum Requirement No. 4: Preservation of Natural Drainage Systems and Outfalls

The site is an existing industrial site with no natural drainage channels. Discharges from the site will be maintained and directed to existing conveyance systems using existing outfalls. Discharge rates will not be increased due to the condition of the existing site as fully impervious. The site will discharge to three existing outfall systems: one located downstream of the Terminal 4 pond, one located at Terminal 5, and infiltration swales located immediately north of the Marine Terminal.

Stormwater control and treatment structures are not located within the 25-year water elevation of the Columbia River, the only salmonid-bearing water adjacent to the project location. Existing outfalls were sized and designed to account for the construction of the project area as fully impervious surfaces.

16.2.2.5 Minimum Requirement No. 5: On-Site Stormwater Management

Stormwater will be managed on site in accordance with Section 2.5.5 of "Volume I, Minimum Technical Requirements and Site Planning" of the stormwater manual. In addition, in accordance with Section 2.5.7 of Appendix I-E of the manual, the project is flow control-exempt and therefore is not required to achieve the low impact development performance standard, or to consider bioretention, rain gardens, permeable pavement, or full dispersion. Stormwater monitoring manholes will be installed upstream of all connection points to monitor water quality and confirm that on-site stormwater management techniques meet all required water quality benchmarks.

Site grading will be conducted and stormwater improvements installed to minimize the discharge of stormwater runoff from the site. Structural components of design, including manmade conveyances, inlets, and berms, will be used to contain stormwater on site. The project design accounts for the safe conveyance of the 100-year storm event in accordance with the stormwater manual.

16.2.2.6 Minimum Requirement No. 6: Runoff Treatment

Because the total project will add more than 5,000 square feet of pollution-generating hard surface, the project is required to address runoff treatment. Treatment units are sized for the contributing area and expected water quality flow as determined by the WWHM. Treatment facilities were selected in accordance with the process identified in Chapter 4 of Volume I and Chapter 2 of Volume V of the stormwater manual. An operations SWPPP (prepared under separate cover) adheres to the maintenance schedule required in Volume V.

Discharge water quality monitoring manholes will be provided at all connection points to the existing stormwater conveyances. Stormwater discharges from pollution-generating surfaces in the Storage Area and Marine Terminal will be discharged to existing stormwater systems located in Terminal 4. Stormwater will be treated on site to the discharge limits identified in the state Industrial Stormwater General Permit. Terminal 4 discharges are currently permitted through state General Industrial Stormwater Permit No. WAR000424.

Stormwater discharges from pollution-generating surfaces in the area of the future West Boiler, the unloading and office area, and rail improvements will be discharged to existing systems located in Terminal 5. Stormwater will be treated on site to the discharge limits identified in the state Phase II Municipal Stormwater Permit. Terminal 5 stormwater will then be routed to an existing water quality pond that was designed with sufficient capacity for the built-out project areas, assuming fully impervious coverage. Terminal 5 discharges are currently permitted through state Phase II Municipal Stormwater Permit No. WAR045201.

16.2.2.7 Minimum Requirement No. 7: Flow Control

Flow control is not required for this project, which discharges indirectly to the Columbia River, which is listed in Appendix I-E of the stormwater manual. The areas proposed for redevelopment are located within the existing drainage basins of developed storm drain systems that discharge through manmade conveyances directly to the river.

Additionally, the brownfield nature of the site is such that the project stormwater does not result in the diversion of drainage from any perennial stream or from any category of wetland.

On-site stormwater will be collected from building roofs through gutter and rain drain systems that bypass stormwater treatment, as these surfaces are classified as non-pollution generating. Stormwater from surface improvements will be collected through a series of inlets and storm drain systems, routed through on-site treatment, and discharged to existing on-site manmade pipelines. These pipelines continue

through manmade conveyance pipes to manmade water quality facilities before discharging through piped outfalls to the Columbia River. From collection to discharge into the river, the stormwater will never be conveyed through natural channels.

The design of the downstream conveyance and water quality ponds that are not part of this project assumed that the project sites will be developed as fully impervious. Copies of the design reports for the downstream conveyance systems are attached in Appendix D.

16.2.2.8 Minimum Requirement No. 8: Wetlands Protection

Wetland protection does not apply to this project. This project will not discharge stormwater directly or indirectly into a wetland.

16.2.2.9 Minimum Requirement No. 9: Operation and Maintenance

An operations SWPPP consistent with the provisions of Volume V of the stormwater manual is being submitted under separate cover. A copy will be retained on site and be available for review. Updated logs and copies of all required monitoring will be retained and included in the SWPPP for reference.

16.3 City Standards

Water Quality Standards – The City's requirements for surface water management are contained within the following ordinances:

- Erosion prevention and sediment control (VMC 14.24)
- Stormwater control (VMC 14.25)
- Water resources protection (VMC 14.26)

Wastewater Pretreatment Ordinance – Pretreatment will be conducted on site in accordance with the requirements of the City industrial wastewater pretreatment permit. Process water wastewater streams requiring pretreatment include blowdown and condensate discharges from the boiler plants. Pretreatment processes for these wastewater streams will be designed and furnished by the boiler manufacturer in accordance with industry practices.

Table 39 includes data provided by the boiler treatment supplier and illustrates example discharge constituents of similar boiler installations within the City. The constituent concentrations shown for the boiler blowdown and softener backwash discharges are the estimated wastewater concentrations prior to pre-treatment. The boiler manufacturer is required to provide on-site pretreatment prior to discharging into the sanitary sewer system. The daily maximum concentration limit is the discharge and constituent concentration limits listed in the City's pretreatment ordinance. Effluent monitoring will be completed to ensure compliance with the City's pretreatment ordinance. The daily maximum concentration limits below have been obtained directly from VMC 14.010.080.

Table 39. Process Wastewater Constituent Concentrations

Constituent	Boiler Blowdown	Softener Backwash	Daily Maximum Concentration Limit	Unit
pH (minimum)	10.2	8	5.5-10.0	-
Arsenic	-	-	0.22	mg/L
Biological Oxygen Demand	-	-	500	ppd
Cadmium	<0.04	<0.04	0.14	mg/L
Chromium	<0.01	<0.01	7.22	mg/L
Chromium (hexavalent)	-	-	4.28	mg/L
Copper	4	0.2	3.67	mg/L

Constituent	Boiler Blowdown	Softener Backwash	Daily Maximum Concentration Limit	Unit
Cyanide	-	-	0.47	mg/L
Hydrocarbon-based Oil & Grease	-	-	50.0	mg/L
Lead	<0.2	<0.2	0.44	mg/L
Mercury	-	-	0.008	mg/L
Molybdenum	<0.1	<0.1	0.42	mg/L
Nickel	<1	<1	0.90	mg/L
Selenium	-	-	0.31	mg/L
Silver	-	-	1.13	mg/L
Temperature	-	-	104	Degrees Fahrenheit
Thallium	-	-	0.53	mg/L
Zinc	-	-	1.64	mg/L

Additionally, discharges will comply with VMC 14.010.050 Prohibited Discharge Standards, VMC 14.010.060 National Categorical Pretreatment Standards, and VMC 14.010.070 State Pretreatment Standards.

17. Provisions for Future Construction

The Facility is proposed to be constructed in two phases. Most of the work will be completed during initial construction; however, the design includes provisions to facilitate construction of the second phase. The provisions are summarized below.

Stormwater design and analysis for the entire built-out site, including the future phase, were completed for the entire site as part of this engineering report. The expansion areas contribute directly to stormwater systems that will be installed in the initial phase of construction and the design therefore includes adequate capacity sized to handle stormwater from the expansions described below; the design also includes a conservative margin.

17.1 Unloading Stations

Initial construction will include the below-ground improvements located within the limits of the rail unloading facility. The improvements, including the concrete containment trench and pump pits, will be completed to allow a third row of unloading stations, bringing the total number of unloading stations to 90. Mechanical and electrical systems will not be installed at this time. Sufficient overhead lighting as well as fire protection systems will be installed in this vicinity to comply with safety standards adopted by the project and required by permit.

Underground “wastewater” collection systems, including floor drains, will be installed and routed to the collection system for the entire rail unloading facility. Stormwater that is “blown” into the covered facility from the sides and any leaks, drips, wash water, etc. will be pumped to the containment tanks located in the area of the administration/support buildings for haul off and disposal. No runoff from this area will contribute to existing or planned stormwater systems.

17.2 West Boiler

Constructing the West Boiler will be necessary if the Facility is supplied with crude oils that must be brought to a more viscous state through additional heating in order to be pumped and handled. Construction of the West Boiler will not commence until warranted by market conditions.

The West Boiler will include the enclosed west boiler building, parking area, and landscaping. All wastewaters generated within the boiler plant will contribute to floor drains and will be pumped to the area of the administration/support buildings for discharge to the City's sanitary sewer system. Process wastewater, including condensate, blowdown, and cooling water, will be treated on site and discharged to the sanitary sewer.

Stormwater from the West Boiler will contribute to the 24-inch gravity storm sewer extended underneath the rail corridor to serve the area of the administration/support buildings. The stormwater will be conveyed to a water quality vault (0200-WQV-001) for treatment to Basic treatment levels. The design of the water quality vault is sized to include the contributing area for the West Boiler. See the design section for details.

17.3 Product Storage Tanks

Initial construction of the Facility will include four of the six planned product storage tanks. Initial construction will include completion of the necessary ground improvements and construction of the containment dikes, liners, and required stormwater collection systems.

Stormwater from the future product storage tanks will contribute to the water quality systems installed during initial construction. The treatment systems, including oil-water separator, water quality vault, and proposed hydrodynamic separator, have been sized for the ultimate build-out. See the design section for details.

18. Treatment Unit Alternatives Analysis

The proposed Facility is designed with an abundance of source controls to limit the contamination of stormwater. Segregating the stormwater from the on-site industrial processes dramatically reduces the anticipated influent levels of contamination in the stormwater. The following sections first describe the selected treatment unit and then list the alternatives that were considered and rejected.

18.1 Basic Treatment Units

Stormfilter Using ZPG Media – Selected as the preferred alternative for providing Basic treatment for areas 200, 300, and 600, this unit has received its General Use Level Designation from Ecology and has a track record of reducing the TSS when designed and maintained appropriately.

Media Filter Drain – Realigning the roadway south left enough space for the installation of the media filter drain that was selected as the preferred alternative for providing Basic treatment at Area 400. The unit has received General Use Level Designation for advanced treatment.

The units that were considered but rejected for Basic treatment are listed in Table 40.

Table 40. Rejected Alternatives – Basic Treatment

Basic Treatment Unit	Reason for Rejection
MWS-Linear Modular Wetland	Approved for conditional use only – insufficient area on site
Biofiltration Swale	Insufficient area on site
Wetpond	Insufficient area on site
Wetvault	Filter vault media options provides greater expandability if additional treatment required in long term.

18.2 Enhanced Treatment Units

StormFilter Using MetalRx Media was selected as the preferred alternative for providing Enhanced treatment for Area 300. The unit has received its Conditional Use Level Designation from Ecology and, when used in treatment train with GAC, provides necessary filter capabilities. The units that were considered but rejected for Enhanced treatment are listed in Table 41.

Table 41. Rejected Alternatives – Enhanced Treatment

Enhanced Treatment Unit	Reason for Rejection
Filterra System	Modular sizing for Filterra does not treat runoff volume anticipated
Compost-Amended Biofiltration Swale	Insufficient area on site
Treatment Trains from Table 3.4.1 of SWMM	Insufficient area on site

18.3 Oil-Water Separators

Coalescing Plate Separator Bay – The selected units include two Contech VLC80-3 capable of handling a design flow rate of 880 gpm with over 35,000 square feet of coalescing plate area, OldCastle Pre-cast 612-2 CPS with 1,776 square feet of coalescing plate area, and 576 CPS with 592 square feet of coalescing plate area. The coalescing plate technology provides oil separation with a smaller footprint.

The units that were considered but rejected for oil treatment are listed in Table 42.

Table 42. Rejected Alternatives – Oil Treatment

Enhanced Treatment Unit	Reason for Rejection
API-Type Oil-Water Separator	Larger footprint
Linear Sand Filter	Insufficient area on site
Filterra System	Modular sizing for Filterra does not treat runoff volume anticipated

18.4 Volatile Organics/BTEX Treatment

StormFilter Using GAC Media was selected as the preferred alternative for the removal of volatile organics and BTEX/benzene. The rationale for using a passive GAC treatment as opposed to positive pressure/pumped active process (e.g., sand filtration and GAC filters) is that the amount of volatile organics and benzene from the site is anticipated to be minimal because of the abundance of source control and upstream oil-water separation included in the project. The passive system is shown to remove approximately 40 percent of the benzene when concentrations are at or below 1 ug/L.

The units that were considered but rejected for the removal of volatile organics and BTEX/benzene are listed in Table 43.

Table 43. Rejected Alternatives – Volatile Organic Treatment

Volatile Organic Treatment Unit	Reason for Rejection
Positive Pressure Sand Filtration with GAC Unit	Treatment requires power and increased maintenance. Source controls effectively limit contact water with product eliminating need for advanced treatment technology

19. Design and Construction Timetable

A preliminary schedule for design and construction is presented in Table 44. The west boiler building, unloading stations, and storage tanks will be built when warranted by market conditions.

Table 44. Permitting and Construction Milestones

Event	Milestone Date
Construction Start Date	January 4, 2016
Completion of Underground Utility Installation	May 1, 2016
Initial Site Stabilization	May 1, 2016
Commissioning of proposed stormwater system	May 1, 2016
Facility Operations Startup	June 1, 2016
Completion of Grading	July 1, 2016
Landscape Installation	July 1, 2016
Facility Tanks 1-4 Operational	February 1, 2017
Final Grading (Tanks 5-6)	February 1, 2017

20. SEPA/NEPA Compliance

The proposed Facility is subject to a site certification application being considered by EFSEC, and that body is acting as the lead agency under SEPA. EFSEC has issued a determination of significance, and an environmental impact statement, which is now in preparation, will be completed before the site certification agreement is issued.

The only aspect of this project subject to NEPA is the decision by the USACE under Section 10 of the Rivers and Harbors Act for work at the existing berths 13 and 14. The USACE will be responsible for NEPA compliance related to the decision under Section 10.

21. List of Acronyms and Abbreviations

Applicant: Tesoro Savage Petroleum Terminal LLC

ASC: Application for Site Certification

bbl: barrel and barrels

BMP: best management practice

BTEX: benzene, toluene, ethylbenzene, and xylenes

CFR: Code of Federal Regulations

cfs: cubic feet per second

City: City of Vancouver

CMMP: contaminated media management plan

Ecology: Washington State Department of Ecology

EFSEC: Energy Facility Site Evaluation Council

Facility: Vancouver Energy

FEMA: Federal Emergency Management Agency

GAC: granulated activated carbon

gpd: gallons per day

gpm: gallons per minute

HDPE: high-density polyethylene

IBC: International Building Code

MGD: million gallons per day

MSDSs: material safety data sheets

MTCA: Model Toxics Control Act

NEPA: National Environmental Policy Act

NPDES: National Pollutant Discharge Elimination System

PAHs: polynuclear aromatic hydrocarbons

PCBs: polychlorinated biphenyls

Port: Port of Vancouver USA

POTW: Publicly Owned Treatment Works

RCW: Revised Code of Washington

RM 103: River Mile 103

SEPA: State Environmental Policy Act

SMP: Shoreline Management Program

TCE: trichloroethylene

TSS: total suspended solids

USACE: U.S. Army Corps of Engineers

USGS: U.S. Geological Survey

VMC: Vancouver Municipal Code

VOC: volatile organic compound

WAC: Washington Administrative Code

WDFW: Washington State Department of Fish and Wildlife

WVFA: West Vancouver Freight Access

WWHM: Western Washington Hydrology Model