TABLE OF CONTENTS

PART 5 APPLICATIONS FOR PERMITS AND AUTHORIZATIONS 5-1

SECTION 5.1 AIR EMISSIONS PERMITS AND AUTHORIZATIONS 5-3
5.1.1 Introduction 5-3
5.1.2 Project Emissions 5-4
5.1.3 Applicable Regulations 5-20
5.1.4 Local Air Quality Impact Assessment 5-26
SECTION 5.2 WASTEWATER PERMIT APPLICATION 5-39
SECTION 5.3 STORMWATER DISCHARGE PERMIT APPLICATION 5-40

LIST OF TABLES

Table 5.1-1. Area 600 Boilers Maximum Annual Emission Rates[1] 5-5
Table 5.1-2. Area 600 Boiler Hourly Emission Rates[1] 5-5
Table 5.1-3. Marine Vapor Combustion Unit Emissions due to Displaced Marine Vessel Vapors 5-6
Table 5.1-4. Marine Vapor Combustion Unit Emissions due to Assist Gas 5-7
Table 5.1-5. Marine Vapor Combustion Unit – Total Emissions 5-8
Table 5.1-6. Total Crude Oil Storage Tank Emission Rates[3] 5-9
Table 5.1-7. Emergency Diesel Fire Water Pump Emission Rates 5-10
Table 5.1-8. Short-term and Annual VOC Emissions from the Fugitive Equipment Leaks 5-11
Table 5.1-9. Hourly Emissions 5-11
Table 5.1-10. Daily Emissions 5-12
Table 5.1-11. Annual Emissions 5-12
Table 5.1-12. Facility-wide Toxic Air Pollutant Emissions 5-13
Table 5.1-13. Facility-wide Annual Toxic Air Pollutant Emissions 5-14
Table 5.1-14. Area 600 Boiler TAP Emissions 5-15
Table 5.1-15. Marine Vapor Combustion Unit TAP Emissions 5-16
Table 5.1-16. Crude Oil Storage Tank TAP Emissions 5-17
Table 5.1-17. Emergency Fire Water Pump Engine TAP Emissions 5-18
Table 5.1-18. Fugitive Component Leak TAP Emissions 5-19
Table 5.1-19. Stack Parameters 5-27
Table 5.1-20. Existing Air Quality 5-32
Table 5.1-21. Project-only Modeling Results 5-35
Table 5.1-22. Comparison of Cumulative Concentrations with Ambient Air Quality Standards 5-36
Table 5.1-23. Maximum Predicted TAP Concentrations 5-37

LIST OF FIGURES

Figure 5.1-1. Site Plan with Emission Units and Property Boundary 5-28
Figure 5.1-2. Pearson Field Airport Windrose from 2008-2012 5-30
Figure 5.1-3. Modeling Receptor Grids 5-34

PART 5 APPLICATIONS FOR PERMITS AND AUTHORIZATIONS

Section 5.1 – Air Emissions Permits and Authorizations

WAC 463-60-536
Applications for Permits and Authorizations – Air emissions permits and authorizations.

(1) The application for site certification shall include a notice of construction application pursuant to the requirements of Chapter 463-78 WAC.

(2) The application shall include requests for authorization for any emissions otherwise regulated by local air agencies as identified in WAC 463-60-297 Pertinent federal, state and local requirements.

(04-23-003, recodified as § 463-60-536, filed 11/4/04, effective 11/11/04. Statutory Authority: RCW 80.50.040 (1) and (12). 04-21-013, § 463-42-536, filed 10/11/04, effective 11/11/04.)

Section 5.1 Air Emissions Permits and Authorizations

5.1.1 Introduction

Tesoro Savage Petroleum Terminal LLC (Applicant) proposes to construct a facility in Vancouver to receive crude oil by rail and transfer it to vessels. The Vancouver Energy Terminal (Facility) will emit air pollutants and, therefore, must obtain an air quality permit before construction of the Facility can commence. Air permits are required for construction and operation of the emissions units associated with the stationary source. Emissions from mobile sources, including ships, trains, and vehicles, are regulated under other federal mobile source emission standards and are, therefore, not regulated or addressed under the stationary source air permitting process.

The Energy Facility Site Evaluation Council (EFSEC) is the lead state agency responsible for environmental permitting of facilities that have the capacity to receive more than an average of 50,000 barrels per day of crude or refined petroleum products that has been or will be transported over marine waters. EFSEC has responsibility for technical review of air quality concerns and for administering preconstruction permits.

Under Washington Administrative Code (WAC) 463-78-005, EFSEC has adopted by reference the general air quality regulations that the Washington State Department of Ecology (Ecology) has established in Chapters 173-400, 173-401, 173-406, and 173-460.[1] It should also be noted that regulations established by the Southwest Clean Air Agency (SWCAA) do not directly apply to the Facility. However, SWCAA regulations are discussed in this Application to demonstrate that even if the local regulations did apply, the Facility would be compliant.

5.1.1.1 Organization

This section constitutes a Notice of Construction (NOC) permit application. Although an air quality permit application typically begins with a project description, this permit application is a component of a broader Application for Site Certification. Section 2.3, Construction on Site, of this Application provides a detailed project description.

Key components of this air quality permit application are as follows.

- Section 5.1.2 describes the components of the project that emit air pollutants and presents estimated emissions. Emissions are based on equipment vendor information, emissions regulations, and the Best Available Control Technology (BACT) analysis. A more detail discussion of BACT is included in Attachment 1.
- Section 5.1.3 identifies and discusses potentially applicable air quality regulations.
- Section 5.1.4 describes an air quality dispersion modeling analysis used to estimate concentrations of criteria pollutants and toxic air pollutants (TAPs) in the vicinity of the project (i.e., Class II areas). Section 5.1.4 also compares predicted ambient concentrations with regulatory criteria.
- References are provided in Section 1.5, Sources of Information, of this Application.

[1] Because EFSEC has adopted the Ecology regulations by reference, this section cites directly the Ecology regulations for the reader's convenience.

5.1.1.2 Summary of Findings

This permit application is summarized as follows.

- Emissions units at the Facility will employ BACT to ensure emissions of all regulated pollutants are less than major source thresholds.
- The Facility will comply with all federal and state emissions standards, including New Source Performance Standards and National Emissions Standards for Hazardous Air Pollutants.
- Predicted total concentrations of the criteria air pollutants emitted from the Facility are less than the National and Washington Ambient Air Quality Standards (NAAQS and WAAQS) established to protect human health and welfare. The maximum predicted concentrations attributable to the Facility are added to the existing background concentrations to ensure a conservative analysis.
- Estimated emissions or predicted concentrations of TAPs released from the Facility are below Ecology's Small Quantity Emissions Rates (SQER) or Ecology's Acceptable Source Impact Levels (ASIL) for all TAPs, demonstrating that the Facility emissions will be in compliance with Washington's TAP regulations.

5.1.2 Project Emissions

5.1.2.1 Criteria Pollutant Emissions

Criteria pollutants, including oxides of nitrogen (NO_X), sulfur dioxide (SO_2), carbon monoxide (CO), volatile organic compounds (VOCs), and particulate matter (PM)[2], will be emitted by emissions units at the Facility. Facility emission units include natural gas-fired boilers, marine vapor combustion units (MVCUs), and emergency fire-water pumps, as well as fugitive VOC emissions from crude oil storage tanks and piping components. The following sections discuss the development of emission estimates for each of these emission units. Detailed supporting emission calculations are presented in the spreadsheets in Attachment 2.

5.1.2.1.1 Area 600 – Boiler Building

As described in greater detail in Part 2 of this Application, the Facility will receive crude oil from rail cars. The oil will be unloaded from the rail cars and pumped to storage tanks. Steam provided by natural gas-fired boilers to be located in Area 600 will be piped to the rail car unloading area where it will be used on an as-needed basis to heat up to 30 rail cars at a time, reducing the viscosity of the crude oil sufficiently for the rail car unloading process to be completed within a reasonable time period.

Three boilers, each with a nameplate heat input capacity of 62 million British thermal units per hour (MMBtu/hr) will be located near the rail car unloading area (these boilers are referred to as the Area 600 boilers). Typically, no more than two of these boilers will operate at any given time, with the third boiler kept as a redundant unit. To allow for uninterrupted steam supply, the third boiler may start up and begin producing steam for a limited period of time before one of the operating boilers is shut down. For the purposes of evaluating compliance with short-term

[2] Virtually all of the particulate matter from the Facility emissions units will be $PM_{2.5}$. For simplicity, this application generally refers to PM but the applicability and compliance will be assessed assuming PM is all $PM_{2.5}$.

(1-24 hour) ambient standards and ASILs, all three boilers were assumed operating for 24 continuous hours. For the purposes of evaluating compliance with annual ambient standards and ASILs, two boilers were assumed to combust a maximum of 755 million standard cubic feet of natural gas per year (MMscf/yr).

Unloading boiler emission rates were calculated assuming Cleaver Brooks 1500 CBEX Elite natural gas-fired boilers (manufacturer specification sheets are provided in Attachment 3), or equivalent, will be installed and operated. The Area 600 boilers could operate throughout the year (i.e., 8,760 hours per year), but at varying loads dictated by rail car arrival schedules, the viscosity of the crude oil contained in the rail cars, and the maximum annual quantity of natural gas to be combusted (755 MMscf/yr). The estimated annual and hourly unloading boiler emission rates and assumptions are presented in Tables 5.1-1 and 5.1-2, respectively.

Table 5.1-1. Area 600 Boilers Maximum Annual Emission Rates[1]

Pollutant	Tons	Basis[2]
NO_X	4.15	Activity: 61.745 MMBtu/hr, 755 MMscf/yr (assuming 1,000 Btu/scf) Emission Factor: 0.011 lb/MMBtu – BACT
CO	13.6	Activity: 61.745 MMBtu/hr, 755 MMscf/yr (assuming 1,000 Btu/scf) Emission Factor: 0.036 lb/MMBtu – BACT
PM	2.83	Activity: 61.745 MMBtu/hr, 755 MMscf/yr (assuming 1,000 Btu/scf)8,760 hr/yr Emission Factor: 0.0075 lb/MMBtu – BACT
VOC	1.89	Activity: 61.745 MMBtu/hr, 755 MMscf/yr (assuming 1,000 Btu/scf) Emission Factor: 0.005 lb/MMBtu – BACT
SO_2	1.39	Activity: 61.745 MMBtu/hr, 755 MMscf/yr (assuming 1,000 Btu/scf) Emission Factor: 0.00367 lb/MMBtu – based on annual average gas sulfur content (1.31 gr/100 scf) as determined by testing, plus a 25% safety factor
GHG (CO_2e)	44,200	Activity: 61.745 MMBtu/hr, 755 MMscf/yr (assuming 1,000 Btu/scf) Emission Factor: 117 lb/MMBtu – composite of the CO_2, CH_4, and N_2O emission factors from 40 CFR Part 98 Tables C-1 and C-2, using the GWP factors from Table A-1

Notes:
1) Annual emission rates assuming continuous capacity operation of two boilers.
2) Assumptions in "Basis" column used to calculate the maximum annual emissions.

Table 5.1-2. Area 600 Boiler Hourly Emission Rates[1]

Pollutant	lb	Basis[2]
NO_X	0.68	Emission Factor: 0.011 lb/MMBtu – BACT
CO	2.22	Emission Factor: 0.036 lb/MMBtu – BACT
PM	0.463	Emission Factor: 0.0075 lb/MMBtu – BACT
VOC	0.309	Emission Factor: 0.005 lb/MMBtu – BACT
SO_2	0.448	Emission Factor: 0.00725 lb/MMBtu – based on maximum hourly average gas sulfur content (2.59 gr/100 scf) as determined by testing, plus a 25% safety factor

Notes:
1) Hourly average emission rates for a single boiler, based on a maximum firing rate of 62 MMBtu/hr.
2) Assumptions in "Basis" column used to estimate the maximum hourly average emissions.

5.1.2.1.2 Marine Vapor Combustion Unit

Crude oil will be transferred from the storage tanks to marine vessels located at the dock at a rate of up to 32,000 barrels per hour (bbl/hr). The daily and annual loading rates will be approximately 47 percent of the maximum hourly loading rate (360,000 bbl/day and 131,400,000 bbl/yr).

A submerged loading configuration will be used to fill all marine vessel cargo compartments in accordance with U.S. Coast Guard (USCG) regulations. See 46 Code of Federal Regulation (CFR) §153.282. Vapors displaced from the tanks on the marine vessels will be collected and routed to a MVCU. Emission rates were calculated based on a system consisting of eight Jordan Technologies CEB units. Emissions from the vapors displaced from the tanks were calculated with a net heating value derived using the estimated composition of vapors in the tanks.

Vessels will arrive at the Facility with onboard cargo compartments filled with inert gas and with oxygen levels below 8 percent. The inert gas consists of cleaned exhaust from dedicated onboard inert gas generators (engines burning ultra-low sulfur distillate). Note that the inert gas is added to the compartments as the cargo is unloaded at its destination – not at the Facility, which is a loading facility.

When the vessel cargo compartments are filled with crude oil, the vapors from the cargo compartments, made up of hydrocarbon and inert gases, may be displaced through a hydrogen sulfide treatment system and then will be routed to a MVCU, that combusts the hydrocarbons in the vapors. In order to ensure adequate destruction of hydrocarbons by the MVCU, the vapor stream must consist of approximately 20 percent hydrocarbon. Based on a theoretical profile of VOC fraction in the displaced vapors as loading progresses (see Attachment 2), the hydrocarbon concentration of the displaced vapors will be less than 20 percent for the first 85 percent of the loading operation, and natural gas will be added if needed to the displaced vapors at the MVCU as an "assist gas" to increase the heating value of the vapors, and ensure adequate destruction. During the final 15 percent of the crude oil loading operation, the hydrocarbon content of the vapors will be greater than 20 percent, and the assist gas will no longer be needed. For calculating emission rates, the hydrocarbon content of the vapors was assumed to average 32 percent over all loading operations.

The MVCU will achieve a 99.8 percent destruction of the hydrocarbons in the delivered vapors. Performance tests conducted on similar units, combusting similar vapor streams, have confirmed that this level of destruction efficiency is achievable. The estimated maximum short-term and annual emission rates are summarized in Tables 5.1-3, 5.1-4, and 5.1-5. Table 5.1-3 presents the emissions from combusting displaced vapors in the MVCU, Table 5.1-4 presents the emissions from combusting the assist gas in the MVCU, and Table 5.1-5 presents the sum.

Table 5.1-3. Marine Vapor Combustion Unit Emissions due to Displaced Marine Vessel Vapors

Pollutant	Emission Factor (lb/MMBtu)	Emission Rates[1]		
		(lb/hr)	(lb/day)	(tpy)
NO_X[2]	0.023	3.32	79.6	6.81
CO[2]	0.010	1.44	34.6	2.96
PM[3]	0.0075	1.08	25.9	2.22
VOC[4]	--	4.21	101	8.64

Pollutant	Emission Factor (lb/MMBtu)	Emission Rates[1]		
		(lb/hr)	(lb/day)	(tpy)
SO_2[5]	--	3.02	72.5	6.20
GHG (CO_2e)[6]	135.6	19,548	469,156	40,100

Notes:

1) Emission rates are based on the following maximum crude oil loading rates: 32,000 bbl/hr, 360,000 bbl/day, and 131,400,000 bbl/yr (i.e., 360,000 bbl/day * 365 days/yr). Based on information provided by the MVCU manufacturer, the hydrocarbon content of the displaced vapors was assumed to average 32 percent by volume over all loading operations. Atypical vapor speciation profile provided by the MVCU was used with the average hydrocarbon content to calculate a composite hourly maximum heat input for the displaced vapor (144 MMBtu/hr), and a composite daily/annual average heat input (68 MMBtu/hr).
2) NO_X, and CO emission factors provided by Jordan Technologies were combined with the composite heat inputs. An email documenting these emission factors is provided in Attachment 3.
3) The MVCU manufacturer did not provide a specific PM emission factor, but indicated that PM emission rates for the MVCU should be calculated using the PM emission factor from EPA's AP-42 Section 1.4 (Natural Gas Combustion). An email documenting this recommendation is provided in Attachment 3.
4) Uncontrolled VOC emissions were calculated using Equation 2 from AP-42 Section 5.2, assuming a worst-case true vapor pressure of 11 psia, a molecular weight of 44.9 lb/lb-mol, and worst-case vessel arrival condition emission factor of 0.86 lb/10^3 gal (from Table 5.2-3, based on the assumption that the previous vessel cargo was volatile, and that the condition of the arriving tanks is "unclean"). The controlled emission rates presented in the table reflect a destruction efficiency of 99.8% applied to the uncontrolled emission rates.
5) SO_2 emissions were based on the assumption that the H_2S content of the vapors displaced from the marine vessel cargo compartments during crude loading operations could be as high as 5,000 ppm, and would be reduced to a maximum of 100 ppm by a system designed to remove H_2S from the vapor. Because each mole of H_2S combusted yields one mole of SO_2, 100 ppm of H_2S will yield 100 ppm of SO_2. The ideal gas law was used to convert this maximum SO_2 concentration, combined with the hourly, daily, and annual maximum volumes of vapor displaced, to mass emission rates.
6) CO_2 emission factor provided by Jordan Technologies as a conservative estimate.

Table 5.1-4. Marine Vapor Combustion Unit Emissions due to Assist Gas

Pollutant	Emission Factor (lb/MMBtu)	Emission Rates[1]		
		(lb/hr)	(lb/day)	(tons/yr)
NO_X[2]	0.023	0.704	6.73	1.23
CO[2]	0.010	0.306	2.93	0.534
SO_2[3]	0.00725	0.222	2.12	0.387
PM[4]	0.0075	0.230	2.19	0.401
VOC[5]	--	0	0	0
GHG (CO_2e)[6]	117	3,580	34,240	6,250

Notes:

1) Emission rates are based on information from Jordan Technologies that assist gas will be added to the displaced vapors from vessel loading at a rate of 30,600 ft^3/hr whenever the hydrocarbon content is less than 20%. The hydrocarbon content of the displaced vapors was assumed to be less than 20% for the first 85% of each loading operation, and greater than 20% for the remainder. The assist gas will be pipeline natural gas; a gross or higher heating value of 1,000 Btu/ft^3 was assumed. The worst-case hourly assist gas usage rate was assumed to be the maximum assist gas usage rate, 30,600 ft^3/hr. Daily and annual composite usage rates were calculated assuming the maximum assist gas usage rate of 30,600 ft^3/hr 85% of the time, and no added assist gas 15% of the time (i.e., a daily usage rate of 292,600 ft^3/day, and 106,803,600 ft^3/year).
2) NO_X and CO emission factors provided by Jordan Technologies were combined with the usage rates and gross heating value described above.
3) SO_2 emissions were based on maximum hourly average gas sulfur content (2.59 gr/100 scf) as determined by testing, plus a 25% safety factor
4) Calculated using an emission factor provided by Jordan Technologies and the usage rates and gross heating value described above.
5) The assist gas will be pipeline natural gas, which is comprised almost entirely of CH_4, which is not a VOC. The small fraction of natural gas that is VOC will be 99.8% combusted by the MVCU; the resulting VOC emissions were assumed to be negligible.
6) The GHG emission factor in units of CO_2e is a composite of the CO_2, CH_4, and N_2O emission factors from 40 CFR Part 98 Tables C-1 and C-2, using the GWP factors from Table A-1.

Table 5.1-5. Marine Vapor Combustion Unit – Total Emissions

Pollutant	Emission Rates[1]		
	(lb/hr)	(lb/day)	(tons/yr)
NO_X	4.02	86.3	8.04
CO	1.75	37.5	3.49
SO_2	3.24	74.6	6.59
PM	1.31	28.1	2.62
VOC	4.21	101	8.64
GHG (CO_2e)	25,150	526,100	50,530

Notes:
Total emission rates are the sum of the displaced vapor emission rates in Table 5.1-5 and the assist gas emission rates in Table 5.1-6. Estimated CO_2 emissions from the inerting gas are included in Table 5.1-5.

5.1.2.1.3 Crude Oil Storage Tanks

There will be six crude oil storage tanks located in the storage area. Each tank will have a storage capacity of approximately 360,000 bbl, and for purposes of emissions calculations a working capacity of 342,000 bbl.[3] Each tank will be approximately 50 feet tall (not counting the peak of the fixed roof), and approximately 240 feet in diameter. Annual throughput for each of the tanks will be 919,800,000 gallons per year, for a total Facility throughput of 131,400,000 bbl per year. Each tank is expected to turn over approximately 64 times per year, when the Facility is operating at full capacity. The tanks will feature an internal floating-roof design, with a pontoon-style internal deck. The edge of the deck will be equipped with a mechanical shoe primary seal, and a rim-mounted secondary seal to minimize the quantity of crude oil on the inside walls when the tank is drawn down. A figure showing a typical internal floating-roof sealing system similar to that proposed for the Facility is provided in Attachment 3 to this section.

Environmental Protection Agency's (EPA) TANKS 4.0.9d program (hereafter, "TANKS") was used to calculate fugitive emissions from the crude oil storage tanks. TANKS is a program that executes the equations in EPA's AP-42 Section 7.1 (Organic Liquid Storage Tanks), and uses the working volume of the tank to establish a total throughput for estimating fugitive emissions. Speciation information was developed for a range of crude oils[4], and provided to TANKS for the emission rate calculations that are detailed in Attachment 2. Tank emissions calculated by TANKS are summarized in Table 5.1-6, and the input data and results from TANKS are provided in Attachment 2 to this section.

---

[3] Although the tanks could hold approximately 380,000 bbl, in actual operation internal floating roof tanks are never completely full, and the tanks are expected to operate at a normal fill capacity of 360,000 bbl. The working capacity of the tanks is slightly lower than the normal fill capacity. For purposes of emissions estimation a more accurate working capacity of 342,000 bbl is assumed, based on preliminary tank design drawings. Elsewhere in the ASC, the working capacity is referred to as "approximately 340,000 bbl".

[4] Six crude oils with Reid Vapor Pressures (RVPs) ranging from 0.98 to 8.41, as well as four Bakken crudes (413, 413-light, 423, and 430).

Two of the six crude oil storage tanks may be electrically heated. No combustion units will be used to heat the tanks; the electric heaters will be powered by electricity[5]. The maximum temperature of the heated tanks will be 150 °F, and only crude oil with an API gravity less than 35 is anticipated to require heating, and then only when ambient temperatures are sufficiently low to warrant heating of a particular crude to ensure it can be pumped out of the tank when necessary. Actual use of the heating system, and the temperature to which the tanks will be heated, will be determined by ambient temperatures and the API gravity of the crude oil.

AP-42 Section 7.1 and TANKS do not provide a means for estimating emissions from heated floating-roof tanks. Rather than making the assumption that fugitive emissions from the heated tanks would be the same as those from a non-heated tank, a spreadsheet was developed to perform AP-42 Section 7.1 calculations. After the spreadsheet was verified to produce results equivalent to TANKS for the unheated tanks, it was used to calculate emissions from the two heated tanks by changing the vapor pressures of the crude oil and the constituents of interest to reflect the maximum stock temperature of the heated tanks, which will be 150°F.

Crude oils with an API gravity less than 35 would potentially require heating to maintain a reduced viscosity for pumping, and then only when needed based on the ambient temperature. Three of the example crude oils that could be received and loaded at the proposed Facility have an API gravity less than 35. Fugitive emissions from the heated tanks were calculated based on the assumption that the worst-case (i.e., maximum-emitting) crude for each constituent of interest would be stored in the heated tanks throughout the year, and that the tanks would be heated to 150°F throughout the year, regardless of the ambient temperature.

Approximately once every 10 years, tanks will require inspection to ensure adequate operational condition. During this inspection process, a tank is completely drained and degassed. Degassing emission calculations were estimated by combining emissions from two calculations. To account for withdrawal losses while draining and refilling the portion of the tank above the level of the feet on the floating roof, emissions were estimated using TANKS for an internal floating roof tank (parameters specified in Attachment 2). For the losses associated with draining the tank below the legs that hold up the floating roof, working loss emissions were estimated using TANKS with a fixed roof with a height equal to the height of the legs (additional parameters specified in Attachment 2). Working and withdrawal loss emissions were then summed in order to determine the total VOC degassing emissions of approximately 1.6 tons.

Table 5.1-6. Total Crude Oil Storage Tank Emission Rates[3]

Pollutant	Hourly Average Emissions (lb/hr)	Annual Emissions (ton/yr)
VOC	4.96[1]	21.7[2]

Notes:
1) Hourly emission rate is the annual emission rate output from tanks divided by 8,760 hours per year.
2) Annual emission rate is a weighted composite of 80% of the worst-case Bakken crude oil and 20% of the worst-case non-Bakken crude oil for the four unheated tanks, and, for the two heated tanks, the worst-case heated sub-35 API gravity crude oil. Approximately every 10 years, the annual emissions will be approximately 1.6 tons higher due to tank inspection and maintenance.
3) Emissions are a combined total from all six tanks.

[5] The electrical supply for tank heating will be provided by Clark Public Utilities as described in section 2.17.6.

There will be three additional containment tanks located in Area 200 not intended to store crude oil (see section 2.3.3). In addition to collecting wash water, these tanks could be used to store spilled material. The containment tanks are fixed roof tanks with an estimated height of 24 feet and a 12-foot diameter. It is expected that the throughput for these additional tanks will result in roughly one tank turnover per week. The liquid itself will be almost entirely soapy water, with minimal crude oil present in the mixture. Because of this relatively small throughput and small fraction of crude oil present in the mixture, emissions from these containment tanks are considered to be negligible.

5.1.2.1.4 Emergency Diesel Engines

Three emergency fire water pumps powered by diesel engines will be used in the event that water is needed to fight a fire within the Facility at the same time that electrical power is not available from the grid. Each of the fire pump engines will have a capacity of 225 hp or less.

While specific makes and models have not been selected for the emergency fire pump engines, emission rates were calculated using emission factors provided by manufacturers for engines that are representative of the units that will be installed. All three engines will be fuelled with ultra-low sulfur diesel (ULSD). Planned operation of the units will be limited to a half hour per week for readiness testing, and one 8-hour test per year, as specified by the National Fire Protection Association's NFPA 25. Calculated emission rates from these engines are summarized in Table 5.1-7.

Table 5.1-7. Emergency Diesel Fire Water Pump Emission Rates

Pollutant	Emission Factor[1] (g/kW-hr)	Emission Rate[2]		
		(lb/hr)	(lb/day)	(ton/yr)
NO_X	0.335	0.124	0.124	0.00211
CO	1.60	0.592	0.592	0.0101
SO_2	--[3]	0.00254	0.00254	0.0000432
PM	0.17	0.0629	0.0629	0.00107
VOC	0.37	0.137	0.137	0.00233
GHG (CO_2e)	717.13[4]	265	265	4.51

Notes:
1) Provided by manufacturer/data.
2) Emissions are for a single diesel fire water pump engine, operated for a maximum of 1 hour per day and 34 hours per year.
3) Based on use of ULSD (15 ppm sulfur by weight).
4) Based on the CO_2, CH_4, and N_2O 40 emission factors for distillate fuel oil No. 2 from CFR Part 98 Subpart C, and a rated engine power output of 225 hp.

5.1.2.1.5 Fugitive Component Leaks

VOC emissions associated with minute vapor leakage from valve seals, pump seals, pressure relief valves, flanges, and similar equipment were calculated using anticipated component counts and EPA fugitive emissions factors. Fugitive emission factors were obtained from Protocol for Equipment Leak Estimates, EPA 453-R95-017, November 1995. Fugitive VOC emissions associated with leaks from gaseous and liquid streams are presented in Table 5.1-8. Calculation details are provided in Attachment 2.

Table 5.1-8. Short-term and Annual VOC Emissions from the Fugitive Equipment Leaks

Pollutant	Hourly Average Emissions[1] (lb/hr)	Annual Emissions[2] (ton/yr)
VOC	0.19	0.82

Notes:
1) Hourly emission is the worst-case crude emission rate divided by 8,760 hours per year.

5.1.2.1.6 Locomotive and Marine Vessel Emissions

Crude oil will be delivered to the Facility by rail for transport by marine vessel. Emissions from locomotives and vessels are not included in the Facility emissions inventory or dispersion modeling because they are mobile sources powered by off-road engines. These sources of emissions are specifically exempted by federal and state regulations from pre-construction permitting.[6]

5.1.2.1.7 Facility-wide Emissions Summary

Tables 5.1-9, 5.1-10, and 5.1-11 summarize the maximum estimated hourly, daily, and annual criteria pollutant and greenhouse gas (GHG) emissions from all Facility emissions units. Facility-wide potential annual GHG emissions are less than 100,000 tpy CO_2e.

Table 5.1-9. Hourly Emissions

Pollutant	Emission Rate (lb/hr)					
	Area 600 Boilers	MVCU	Component Leaks	Tanks	Fire Water Pumps	Total
NO_X	2.04	4.02	--	--	0.372	6.43
CO	6.67	1.75	--	--	1.78	10.2
SO_2	1.34	3.24	--	--	0.00762	4.59
PM	1.39	1.31	--	--	0.189	2.89
VOC	0.926	4.21	0.188	4.96	0.411	10.7
GHG (CO_2e)	21,670	25,150	53.8	59.5	796	47,730

[6] *See, e.g.,* WAC 173-400-030(79) ("Secondary emissions do not include any emissions which come directly from a mobile source such as emissions from the tailpipe of a motor vehicle, from a train, or from a vessel."); *See also in re* Cardinal FG Company, 12 E.A.D. 153, 171-172 (EAB 2005) (Ecology correctly concluded that emissions from a permanently situated non-road vehicle powered by a "nonroad engine" were not attributable to the stationary source); Letter from EPA AQMD Director to Ken Waid (Jan. 8, 1990) stating that "to and fro" vessel emissions are not attributable to a stationary source and that when determining PSD applicability you do not consider those emissions that "result from activities which do not directly serve the purposes of the terminal and are not under the control of the terminal owner or operator.")

Table 5.1-10. Daily Emissions

Pollutant	Emission Rate (lb/day)					
	Area 600 Boilers	MVCU	Component Leaks	Tanks	Fire Water Pumps	Total
NO_X	48.9	86.3	--	--	0.372	136
CO	160	37.5	--	--	1.78	199
SO_2	32.2	74.6	--	--	0.00762	107
PM	33.3	28.1	--	--	0.189	61.7
VOC	22.2	101	4.50	119	0.411	247
GHG (CO_2e)	520,140	526,100	1,290	1,428	796	1,050,000

Table 5.1-11. Annual Emissions

Pollutant	Emission Rate (tons/yr)					
	Area 600 Boilers	MVCU	Component Leaks	Tanks	Fire Water Pumps	Total
NO_X	4.15	8.04	--	--	0.00632	12.2
CO	13.6	3.49	--	--	0.0302	17.1
SO_2	1.39	6.59	--	--	0.000130	7.97
PM	2.83	2.62	--	--	0.00321	5.45
VOC	1.89	8.64	0.822	21.7	0.00689	33.15.7
GHG (CO_2e)	44,170	50,530	236	261	13.5	95,200

5.1.2.2 Toxic Air Pollutants

The Facility has the potential to emit non-criteria air pollutants that are regulated federally by the Clean Air Act (CAA) Section 112 and others regulated in Washington by Ecology and EFSEC under Chapter 173-460 WAC. Some of these pollutants are deemed "hazardous air pollutants" (HAPs) under the CAA Section 112; others are defined as TAPs under Chapter 173-460 WAC.

Table 5.1-12 compares calculated Facility-wide TAP emissions with Washington's SQERs. If Facility-wide emissions of a given pollutant are greater than its SQER, dispersion modeling is required to determine compliance with ambient air quality criteria (ASILs). As shown in Table 5.1-12, eight TAPs exceed the applicable SQERs; compliance with the applicable ASILs will be assessed in section 5.1.4. Table 5.1-13 summarizes the calculated annual TAP emission rates.

Table 5.1-12 also identifies which of the TAPs are a federal HAP. The HAP emitted in greatest quantity from the Facility is hexane (1.75 tons per year). Aggregate HAP emissions are 2.04 tons per year.

The following sections discuss the estimation of TAP/HAP emissions from each emission unit. Detailed emission calculations are presented in Attachment 2 of this section.

Table 5.1-12. Facility-wide Toxic Air Pollutant Emissions

Compound	CAS	HAP?	WA TAP Averaging Period	Emission Rate	SQER	Model?
				lb/avg per	lb/avg per	
Acetaldehyde	75-07-0	Yes	Annual	4.23E-02	71	No
Acrolein	107-02-8	Yes	24-Hour	1.50E-04	0.00789	No
Arsenic	7440-38-2	Yes	Annual	3.20E-01	0.0581	Yes
Benzene	71-43-2	Yes	Annual	1.35E+02	6.62	Yes
Benzo(a)anthracene	56-55-3	No	Annual	2.97E-03	1.74	No
Benzo(a)pyrene	50-32-8	No	Annual	1.93E-03	0.174	No
Benzo(b)fluoranthene	205-99-2	No	Annual	2.88E-03	1.74	No
Benzo(k)fluoranthene	207-08-9	No	Annual	2.89E-03	1.74	No
Beryllium	7440-41-7	Yes	Annual	1.92E-02	0.08	No
1,3-Butadiene	106-99-0	Yes	Annual	2.16E-03	1.13	No
Cadmium	7440-43-9	Yes	Annual	1.76E+00	0.0457	Yes
Carbon monoxide	630-08-0	No	1-Hour	1.02E+01	50.4	No
Chromium, (hexavalent)	18540-29-9	No	Annual	8.96E-02	0.00128	Yes
Chrysene	218-01-9	No	Annual	2.90E-03	17.4	No
Cobalt	7440-48-4	Yes	24-Hour	7.60E-04	0.013	No
Copper	7440-50-8	No	1-Hour	3.36E-04	0.219	No
Cyclohexane	110-82-7	No	24-Hour	9.54E-01	789	No
Dibenzo(a,h)anthracene	53-70-3	No	Annual	1.95E-03	0.16	No
Diesel Engine Particulate	DEP	No	Annual	6.41E+00	0.639	Yes
7,12-Dimethylbenz(a)anthracene	57-97-6	No	Annual	2.56E-02	0.00271	Yes
Ethylbenzene	100-41-4	Yes	Annual	3.08E+01	76.8	No
Fluorene	86-73-7	No	24-Hour	4.73E-05	1.71	No
Formaldehyde	50-00-0	Yes	Annual	1.20E+02	32	Yes
Hexane	110-54-3	Yes	24-Hour	1.79E+01	92	No
Hydrogen Sulfide	7783-06-4	No	24-Hour	4.90E-01	0.263	Yes
Indeno(1,2,3-cd)pyrene	193-39-5	No	Annual	2.90E-03	1.74	No
Isopropyl benzene	98-82-8	Yes	24-Hour	3.93E-02	52.6	No
Manganese	7439-96-5	Yes	24-Hour	3.44E-03	0.00526	No
Mercury	7439-97-6	Yes	24-Hour	2.35E-03	0.0118	No
3-Methylchloranthrene	56-49-5	No	Annual	2.88E-03	0.0305	No
Naphthalene	91-20-3	Yes	Annual	9.80E-01	5.64	No
Nitrogen dioxide	10102-44-0	No	1-Hour	6.43E+00	1.03	Yes
Propylene	115-07-1	No	24-Hour	4.18E-04	394	No
Selenium	7782-49-2	Yes	24-Hour	2.17E-04	2.63	No
Sulfur dioxide	7446-09-5	No	1-Hour	4.59E+00	1.45	Yes
Toluene	108-88-3	Yes	24-Hour	4.29E-01	657	No
Vanadium	7440-62-2	No	24-Hour	2.08E-02	0.0263	No
Xylene (-m)	108-38-3	Yes	24-Hour	2.89E-01	29	No
Xylene (-o)	95-47-6	Yes	24-Hour	1.08E-01	29	No
Xylene (-p)	106-42-3	Yes	24-Hour	1.20E-01	29	No

Table 5.1-13. Facility-wide Annual Toxic Air Pollutant Emissions

Compound	CAS	Emission Rate
		lb/yr
Acetaldehyde	75-07-0	4.23E-02
Acrolein	107-02-8	5.10E-03
Arsenic	7440-38-2	3.20E-01
Benzene	71-43-2	1.35E+02
Benzo(a)anthracene	56-55-3	2.97E-03
Benzo(a)pyrene	50-32-8	1.93E-03
Benzo(b)fluoranthene	205-99-2	2.88E-03
Benzo(k)fluoranthene	207-08-9	2.89E-03
Beryllium	7440-41-7	1.92E-02
1,3-Butadiene	106-99-0	2.16E-03
Cadmium	7440-43-9	1.76E+00
Carbon monoxide	630-08-0	3.42E+04
Chromium, (hexavalent)	18540-29-9	8.96E-02
Chrysene	218-01-9	2.90E-03
Cobalt	7440-48-4	1.34E-01
Copper	7440-50-8	1.36E+00
Cyclohexane	110-82-7	3.48E+02
Dibenzo(a,h)anthracene	53-70-3	1.95E-03
Diesel Engine Particulate	DEP	6.41E+00
7,12-Dimethylbenz(a)anthracene	57-97-6	2.56E-02
Ethylbenzene	100-41-4	3.08E+01
Fluorene	86-73-7	1.61E-03
Formaldehyde	50-00-0	1.20E+02
Hexane	110-54-3	3.45E+03
Hydrogen Sulfide	7783-06-4	1.51E+02
Indeno(1,2,3-cd)pyrene	193-39-5	2.90E-03
Isopropyl benzene	98-82-8	1.43E+01
Manganese	7439-96-5	6.08E-01
Mercury	7439-97-6	4.16E-01
3-Methylchloranthrene	56-49-5	2.88E-03
Naphthalene	91-20-3	9.80E-01
Nitrogen dioxide	10102-44-0	2.44E+04
Propylene	115-07-1	1.42E-02
Selenium	7782-49-2	3.84E-02
Sulfur dioxide	7446-09-5	1.59E+04
Toluene	108-88-3	1.50E+02
Vanadium	7440-62-2	3.68E+00
Xylene (-m)	108-38-3	1.05E+02
Xylene (-o)	95-47-6	3.93E+01
Xylene (-p)	106-42-3	4.38E+01

5.1.2.2.1 Natural Gas-fired Boilers

Emissions of TAPs from the natural gas-fired Area 600 boilers were calculated using emission factors from EPA's AP-42 Section 1.4 (Natural Gas Combustion). TAP emission rates for compounds that are also criteria pollutants (i.e., CO, NO_2, SO_2) were calculated using the same emission factors used to calculate criteria pollutant emission rates. Table 5.1-14 presents short-term TAP emissions from three Area 600 boilers operating at full load and annual TAP emissions from two Area 600 boilers operating at full load.

Table 5.1-14. Area 600 Boiler TAP Emissions

Compound	CAS #	Emission Factor ($lb/10^6$ scf)	Emission Rate[1]		
			(lb/hr)	(lb/day)	(lb/yr)
Arsenic	7440-38-2	0.0002	3.70E-05	8.89E-04	1.51E-01
Benzene	71-43-2	0.0021	3.89E-04	9.34E-03	1.59E+00
Benzo(a)anthracene	56-55-3	0.0000018	3.33E-07	8.00E-06	1.36E-03
Benzo(a)pyrene	50-32-8	0.0000012	2.22E-07	5.33E-06	9.06E-04
Benzo(b)fluoranthene	205-99-2	0.0000018	3.33E-07	8.00E-06	1.36E-03
Benzo(k)fluoranthene	207-08-9	0.0000018	3.33E-07	8.00E-06	1.36E-03
Beryllium	7440-41-7	0.000012	2.22E-06	5.33E-05	9.06E-03
Cadmium	7440-43-9	0.0011	2.04E-04	4.89E-03	8.30E-01
Carbon monoxide	630-08-0	0.036	6.67E+00	1.60E+02	2.72E+04
Chromium, (hexavalent)[2]	18540-29-9	0.000056	1.04E-05	2.49E-04	4.23E-02
Chrysene	218-01-9	0.0000018	3.33E-07	8.00E-06	1.36E-03
Cobalt	7440-48-4	0.000084	1.56E-05	3.73E-04	6.34E-02
Copper	7440-50-8	0.00085	1.57E-04	3.78E-03	6.42E-01
Dibenzo(a,h)anthracene	53-70-3	0.0000012	2.22E-07	5.33E-06	9.06E-04
7,12-Dimethylbenz(a)anthracene	57-97-6	0.000016	2.96E-06	7.11E-05	1.21E-02
Formaldehyde	50-00-0	0.075	1.39E-02	3.33E-01	5.66E+01
Hexane	110-54-3	1.8	3.33E-01	8.00E+00	1.36E+03
Indeno(1,2,3-cd)pyrene	193-39-5	0.0000018	3.33E-07	8.00E-06	1.36E-03
Manganese	7439-96-5	0.00038	7.04E-05	1.69E-03	2.87E-01
Mercury	7439-97-6	0.00026	4.82E-05	1.16E-03	1.96E-01
3-Methylchloranthrene	56-49-5	0.0000018	3.33E-07	8.00E-06	1.36E-03
Naphthalene	91-20-3	0.00061	1.13E-04	2.71E-03	4.61E-01
Nitrogen dioxide	10102-44-0	0.011	2.04E+00	4.89E+01	8.30E+03
Selenium	7782-49-2	0.000024	4.45E-06	1.07E-04	1.81E-02
Sulfur dioxide	7446-09-5	0.00725	1.34E+00	3.22E+01	2.77E+03
Toluene	108-88-3	0.0034	6.30E-04	1.51E-02	2.57E+00
Vanadium	7440-62-2	0.0023	4.26E-04	1.02E-02	1.74E+00

Notes:

1) Short-term emissions from three in-service boilers combined, annual emissions from two in-service boilers combined, each with a maximum heat input rate of 62 MMBtu/hr.
2) Note: AP-42 provides a chromium emission factor for natural gas-fired external combustion, but does not include guidance for partitioning emissions between the carcinogenic chromium VI (hexavalent chromium) and the chromium III (trivalent chromium). EPA's 2002 National-Scale Air Toxics Assessment (NATA) released June 2009 includes a chromium speciation profile for gas-fired process heaters, which indicates 4 percent of total chromium is chromium VI and 96 percent is chromium III. ENVIRON assumed 4 percent of total chromium emissions were emitted as chromium VI.

5.1.2.2.2 Marine Vapor Combustion Unit

Emissions of TAPs from the MVCU were calculated using emission factors from EPA's AP-42 Section 1.4 (Natural Gas Combustion) for both the vapor displaced from the marine vessels and the assist gas. TAP emissions for compounds that are also criteria pollutants (i.e., CO, NO_2, SO_2) were calculated using the same emission factors or assumptions and methodology used to calculate criteria pollutant emission rates. Table 5.1-15 presents aggregate TAP emissions from the proposed MVCU.

Table 5.1-15. Marine Vapor Combustion Unit TAP Emissions

Compound	CAS #	Emission Factor ($lb/10^6$ scf)	Emission Rate[1]		
			(lb/hr)	(lb/day)	(lb/yr)
Arsenic	7440-38-2	0.0002	4.21E-05	9.21E-04	1.69E-01
Benzene	71-43-2	0.0021	4.42E-04	9.67E-03	1.77E+00
Benzo(a)anthracene	56-55-3	0.0000018	3.78E-07	8.29E-06	1.52E-03
Benzo(a)pyrene	50-32-8	0.0000012	2.52E-07	5.53E-06	1.01E-03
Benzo(b)fluoranthene	205-99-2	0.0000018	3.78E-07	8.29E-06	1.52E-03
Benzo(k)fluoranthene	207-08-9	0.0000018	3.78E-07	8.29E-06	1.52E-03
Beryllium	7440-41-7	0.000012	2.52E-06	5.53E-05	1.01E-02
Cadmium	7440-43-9	0.0011	2.31E-04	5.07E-03	9.29E-01
Carbon monoxide	630-08-0	--[2]	1.75E+00	3.75E+01	6.99E+03
Chromium, (hexavalent)[3]	18540-29-9	0.000056	1.18E-05	2.58E-04	4.73E-02
Chrysene	218-01-9	0.0000018	3.78E-07	8.29E-06	1.52E-03
Cobalt	7440-48-4	0.000084	1.77E-05	3.87E-04	7.09E-02
Copper	7440-50-8	0.00085	1.79E-04	3.91E-03	7.18E-01
Dibenzo(a,h)anthracene	53-70-3	0.0000012	2.52E-07	5.53E-06	1.01E-03
7,12-Dimethylbenz(a)anthracene	57-97-6	0.000016	3.36E-06	7.37E-05	1.35E-02
Formaldehyde	50-00-0	0.075	1.58E-02	3.45E-01	6.33E+01
Hexane	110-54-3	1.8	3.78E-01	8.29E+00	1.52E+03
Hydrogen Sulfide	7783-06-4	--[4]	3.21E-03	7.70E-02	6.59E-03
Indeno(1,2,3-cd)pyrene	193-39-5	0.0000018	3.78E-07	8.29E-06	1.52E-03
Manganese	7439-96-5	0.00038	7.99E-05	1.75E-03	3.21E-01
Mercury	7439-97-6	0.00026	5.47E-05	1.20E-03	2.20E-01
3-Methylchloranthrene	56-49-5	0.0000018	3.78E-07	8.29E-06	1.52E-03
Naphthalene	91-20-3	0.00061	1.28E-04	2.81E-03	5.15E-01
Nitrogen dioxide	10102-44-0	--[2]	4.02E+00	8.63E+01	1.61E+04
Selenium	7782-49-2	0.000024	5.05E-06	1.11E-04	2.03E-02
Sulfur dioxide	7446-09-5	--[2]	3.24E+00	7.46E+01	1.32E+04
Toluene	108-88-3	0.0034	7.15E-04	1.57E-02	2.87E+00
Vanadium	7440-62-2	0.0023	4.84E-04	1.06E-02	1.94E+00

Notes:

1) Displaced vapor volumes calculated for maximum hourly, daily, and annual averaging periods were combined with the natural gas-fired emission factors to calculate TAP emission rates; considering that, even for the worst-case hourly average scenario, which is when vessel loading is almost complete, the displaced vapor will not be 100% saturated by hydrocarbons. The maximum hourly assist gas flow rate (30,600 ft^3/hr) was used to calculate emission rates for TAPs that have a SQER with a 1-hour average basis. For TAPs that have a SQER with a 24-hour or annual average basis, 85% of the maximum assist gas flow rate was used.
2) The maximum hourly emission rate calculated for the criteria pollutant analysis was used. See Tables 5.1-3, 5.1-4, and 5.1-5.

3) AP-42 provides a chromium emission factor for natural gas-fired external combustion, but does not include guidance for partitioning emissions between the carcinogenic chromium VI (hexavalent chromium) and the chromium III (trivalent chromium). EPA's 2002 National-Scale Air Toxics Assessment (NATA) released June 2009 includes a chromium speciation profile for gas-fired process heaters, which indicates 4% of total chromium is chromium VI and 96% is chromium III. ENVIRON assumed 4% of total chromium emissions were emitted as chromium VI.
4) H_2S emissions were based on the assumption that the H_2S content of the vapors displaced from the marine vessel cargo compartments during crude loading operations could be as high as 5,000 ppm, and would be reduced to a maximum of 100 ppm by a system designed to remove H_2S from the vapor. Based on information from the MVCU manufacturer, the destruction efficiency of the unit is 99.8%. Therefore, a maximum of 0.2% of 100 ppm H_2S escapes destruction by the MVCU. The ideal gas law was used to convert this maximum H_2S concentration, combined with the hourly, daily, and annual maximum volumes of vapor displaced, to mass emission rates.

5.1.2.2.3 Crude Oil Storage Tanks

Emissions of TAPs from the crude oil storage tanks were calculated using the same methodology as the criteria pollutants. The TANKS program calculated emission rates for each of the TAPs included in the provided speciation information. Table 5.1-16 presents the estimated aggregate TAP emissions from the crude oil storage tanks.

Table 5.1-16. Crude Oil Storage Tank TAP Emissions

Components	CAS #	Emission Rate		
		(lb/hr)	(lb/day)	(lb/yr)
Benzene	71-43-2	1.46E-02	3.50E-01	1.28E+02
Cyclohexane	110-82-7	3.88E-02	9.30E-01	3.40E+02
Cyclopentane	287-92-3	6.73E-03	1.61E-01	5.89E+01
Ethylbenzene	100-41-4	3.36E-03	8.05E-02	2.94E+01
Hexane	110-54-3	6.18E-02	1.48E+00	5.42E+02
Hydrogen Sulfide	7783-06-4	1.58E-02	3.79E-01	1.39E+02
Isooctane	540-84-1	2.95E-03	7.07E-02	2.58E+01
Isopentane	78-78-4	6.62E-02	1.59E+00	5.80E+02
Isopropyl benzene	98-82-8	1.60E-03	3.84E-02	1.40E+01
Pentane	109-66-0	8.80E-02	2.11E+00	7.71E+02
Toluene	108-88-3	1.59E-02	3.82E-01	1.40E+02
1,2,4-Trimethylbenzene	95-63-6	4.91E-03	1.18E-01	4.30E+01
Xylene (-m)	108-38-3	1.15E-02	2.76E-01	1.01E+02
Xylene (-o)	95-47-6	2.83E-03	6.80E-02	2.48E+01
Xylene (-p)	106-42-3	3.16E-03	7.58E-02	2.77E+01

Notes:
1) Annual emission rate for the four unheated tanks is a weighted composite of 80% of the worst-case Bakken crude oil result from TANKS program, and 20% of the worst-case non-Bakken crude oil result from TANKS program, and for the two heated tanks the worst-case heated sub-35 API gravity crude oil calculated using the AP-42 Section 7.1 equations and component physical parameters adjusted to reflect 150 °F.

5.1.2.2.4 Emergency Diesel Engines

Emissions of TAPs from the emergency fire water pump engines were calculated based on EPA AP-42 emission factors for small internal combustion diesel engines (Section 3.3). Annual emissions were based on 34 hours[7] of operation for maintenance and testing purposes only. TAP emissions for compounds that are also criteria pollutants were calculated using the same emission factors or assumptions and methodology used to calculate criteria pollutant emission rates. Table 5.1-17 presents the estimated aggregate TAP emissions from the emergency fire water pump engines.

Table 5.1-17. Emergency Fire Water Pump Engine TAP Emissions

CAS #	Compound	Emission Factor ($lb/10^6$ Btu)	Emission Rate[1]		
			(lb/hr)	(lb/day)	(lb/yr)
83-32-9	Acenaphthene	1.42E-06	2.30E-06	2.30E-06	7.83E-05
208-96-8	Acenaphthylene	5.06E-06	8.20E-06	8.20E-06	2.79E-04
75-07-0	Acetaldehyde	7.67E-04	1.24E-03	1.24E-03	4.23E-02
107-02-8	Acrolein	9.25E-05	1.50E-04	1.50E-04	5.10E-03
120-12-7	Anthracene	1.87E-06	3.03E-06	3.03E-06	1.03E-04
71-43-2	Benzene	9.33E-04	1.51E-03	1.51E-03	5.14E-02
56-55-3	Benzo(a)anthracene	1.68E-06	2.72E-06	2.72E-06	9.26E-05
50-32-8	Benzo(a)pyrene	1.88E-07	3.05E-07	3.05E-07	1.04E-05
205-99-2	Benzo(b)fluoranthene	9.91E-08	1.61E-07	1.61E-07	5.46E-06
191-24-2	Benzo(g,h,i)perylene	4.89E-07	7.93E-07	7.93E-07	2.70E-05
207-08-9	Benzo(k)fluoranthene	1.55E-07	2.51E-07	2.51E-07	8.54E-06
106-99-0	1,3-Butadiene	3.91E-05	6.34E-05	6.34E-05	2.16E-03
630-08-0	Carbon monoxide	--[2]	1.78E+00	1.78E+00	6.04E+01
218-01-9	Chrysene	3.53E-07	5.72E-07	5.72E-07	1.95E-05
53-70-3	Dibenz(a,h)anthracene	5.83E-07	9.45E-07	9.45E-07	3.21E-05
none	Diesel Engine Particulate	--[2]	1.89E-01	1.89E-01	6.41E+00
206-44-0	Fluoranthene	7.61E-06	1.23E-05	1.23E-05	4.20E-04
86-73-7	Fluorene	2.92E-05	4.73E-05	4.73E-05	1.61E-03
50-00-0	Formaldehyde	1.18E-03	1.91E-03	1.91E-03	6.51E-02
193-39-5	Indeno(1,2,3-cd)pyrene	3.75E-07	6.08E-07	6.08E-07	2.07E-05
91-20-3	Naphthalene	8.48E-05	1.37E-04	1.37E-04	4.67E-03
10102-44-0	Nitrogen dioxide	--[2]	3.72E-01	3.72E-01	1.26E+01
85-01-8	Phenanthrene	2.94E-05	4.77E-05	4.77E-05	1.62E-03
115-07-1	Propylene	2.58E-04	4.18E-04	4.18E-04	1.42E-02
129-00-0	Pyrene	4.78E-06	7.75E-06	7.75E-06	2.64E-04
7446-09-5	Sulfur dioxide	--[2]	7.62E-03	7.62E-03	2.59E-01

[7] A half hour per week for readiness testing, and one 8-hour test per year, as specified by the National Fire Protection Association's NFPA 25 (Section 5.1.2.1.4).

CAS #	Compound	Emission Factor (lb/10^6 Btu)	Emission Rate[1]		
			(lb/hr)	(lb/day)	(lb/yr)
108-88-3	Toluene	4.09E-04	6.63E-04	6.63E-04	2.25E-02
108-38-3	Xylenes (m-xylene)[3]	2.85E-04	4.62E-04	4.62E-04	1.57E-02

Notes:
1) Emission rates for a single engine. Hourly emission rates are based on maximum operation, daily emission rates are based on one hour of operation per day, and annual emission rates are based on 34 hours of operation per year.
2) The emission rates calculated for the criteria pollutant analysis were used. See Table 5.1-9.

5.1.2.2.5 Fugitive Component Leaks

TAP emissions associated with normal equipment leakage at the Facility have been estimated using EPA fugitive emission factors for valve seals, pump seals, pressure relief valves, flanges, and similar equipment.[8] Emission estimates are based on equipment counts, which are, in turn, based on preliminary piping and instrumentation diagrams developed for the project. TAP emission rates were based on the calculated fugitive VOC emission rate for the components and a composite speciation profile that was derived from the composite fugitive unheated crude oil storage tank emission rates[9] (Flint 2016). Estimated TAP emissions from component leakage are presented in Table 5.1-18.

Table 5.1-18. Fugitive Component Leak TAP Emissions

Pollutant	CAS #	Emission Rate		
		(lb/hr)	(lb/day)	(lb/year)
Benzene	71-43-2	4.10E-04	9.85E-03	3.60
Cyclohexane	110-82-7	1.00E-03	2.40E-02	8.77
Cyclopentane	287-92-3	4.96E-04	1.19E-02	4.35
Ethylbenzene	100-41-4	1.63E-04	3.90E-03	1.43
Hexane (-n)	110-54-3	3.04E-03	7.30E-02	26.7
Hydrogen Sulfide	7783-06-4	1.38E-03	3.31E-02	12.1
Isooctane	540-84-1	4.06E-05	9.75E-04	0.356
Isopentane	78-78-4	5.93E-03	1.42E-01	52.0

[8] Protocol for Equipment Leak Estimates, U.S. EPA 453-R95-017, November 1995

[9] The calculated fugitive tank and component HAP and TAP emissions rates are based on the same crude oil speciation information. However, because different emission calculation methodologies were used, the speciation information was applied differently for the two emission unit groups.

The storage tank emissions were estimated using TANKS. Physical properties and weight fractions of specific HAP and TAP constituents were obtained for a range of crude oils that could be received and loaded at the proposed facility. The properties and weight fractions were provided to TANKS, which calculated speciated fugitive tank emissions for each crude oil. The speciated emission rates provided by TANKS were used to calculate a composite fugitive tank emission rate for each HAP and TAP.

Fugitive VOC emissions from components were calculated using information and methods from the "Protocol for Equipment Leak Estimates" (EPA 453-R95-017, November 1995). HAP and TAP emission rates were based on the calculated fugitive VOC emission rate for the components combined with a speciation profile based on the composite fugitive tank emission rates for each HAP and TAP.

Pollutant	CAS #	Emission Rate		
		(lb/hr)	(lb/day)	(lb/year)
Isopropyl benzene	98-82-8	3.74E-05	8.96E-04	0.327
Pentane	109-66-0	6.08E-03	1.46E-01	53.3
Toluene	108-88-3	6.26E-04	1.50E-02	5.49
1,2,4-Trimethylbenzene	95-63-6	1.23E-04	2.95E-03	1.08
Xylene (-m)	108-38-3	5.46E-04	1.31E-02	4.79
Xylene (-o)	95-47-6	2.30E-04	5.51E-03	2.01
Xylene (-p)	106-42-3	2.55E-04	6.13E-03	2.24

Notes:
See Attachment 2 for detailed emissions calculations.

5.1.3 Applicable Regulations

This section discusses federal, state, and local air quality regulations and guidelines that potentially apply to the Facility.

5.1.3.1 Emission Standards

5.1.3.1.1 New Source Performance Standards

EPA has established performance standards for a number of air pollution source categories in 40 CFR Part 60. These New Source Performance Standards (NSPS) represent a minimum level of control that is required on a new source. This section identifies those NSPS that apply to Facility emissions units.

Subpart A, General Provisions

Subpart A identifies monitoring, recordkeeping, and notification requirements that apply generally to all NSPS subparts. Subpart A specifies that any performance (emissions) tests required by a specific NSPS subpart must be conducted within 60 days of achieving maximum production rate at which the source will be operated, but not later than 180 days after initial start-up.

Consistent with NSPS requirements, the Applicant will notify EFSEC of commencement of construction of purpose-built facilities, and the actual date of initial start-up. None of the applicable NSPS subparts require performance tests. The Applicant will also maintain records of start-ups and shutdowns, malfunctions of control equipment, and periods of excess emissions if they occur.

Subpart Dc – Standards of Performance for Small Industrial-Commercial-Institutional Steam Generating Units

The provisions of Subpart Dc apply to steam-generating units with a maximum design heat input capacity less than 100 MMBtu/hr and greater than 10 MMBtu/hr. Each of the boilers associated with this project falls within this capacity range. The PM and SO_2 emission standards defined in Subpart Dc do not apply to units that are solely fuelled by natural gas. Therefore, only the recordkeeping and reporting requirements of this subpart are applicable. The provisions of this subpart require that the Applicant maintain a record of the volume of natural gas burned in each boiler during each calendar month.

Subpart Kb – Standards of Performance for Volatile Organic Liquid Storage Vessels
The provisions of Subpart Kb apply to the crude oil storage tanks associated with the Facility. Subpart Kb regulates VOC emissions and establishes controls based on the vapor pressure of the stored liquid.

Because the Facility will receive, store, and load a range of crude oils, some of which may have true vapor pressures within the applicable ranges addressed by Subpart Kb, it is assumed that Subpart Kb will apply to the Facility tanks. Subpart Kb identifies three control options. The Facility will incorporate the option identified in §60.112b(a)(1): a fixed roof in combination with an internal floating roof that floats on the liquid surface. A series of regulations for seals and closure devices related to roof contact must be followed.

Subpart IIII--Standards of Performance for Stationary Compression Ignition Internal Combustion Engines
The provisions of Subpart IIII apply to the emergency diesel fire water pump engines associated with the Facility. Subpart IIII regulates "NMHC+NOx" and PM and requires that the engine manufacturer certify that the engine will meet the standards in the rule; emission testing by the Facility is not required. Subpart IIII limits hours of non-emergency operation, mandates the use of ULSD fuel, and states that the owner or operator must keep records of the time of operation of the engine and the reason the engine was in operation during that time. Initial notification of installation is not required for emergency engines subject to Subpart IIII.

5.1.3.1.2 National Emissions Standards for Hazardous Air Pollutants
Under the provisions of Section 112 of the 1990 CAA Amendments, EPA was required to regulate emissions of a total of 189 HAPs from stationary sources.[10] EPA does this by specific industry categories to tailor the controls to the major sources of emissions and the HAPs of concern from that industry. The rules promulgated under Section 112 generally specify the Maximum Achievable Control Technology (MACT) that must be applied for a given industry category. Consequently, these rules are often called MACT standards.

MACT standards can require facility owners/operators to meet emission limits, install emission control technologies, monitor emissions and/or operating parameters, and use specified work practices. In addition, the standards typically include recordkeeping and reporting provisions. MACT standards are codified in 40 CFR Parts 61 and 63.

There are two types of HAP sources, "major" sources of HAP emissions and "area" sources of HAP emissions. Major sources are facilities that have a potential to emit more than 10 tons of a single HAP, or 25 tons of all HAPs combined. Area sources are facilities that are not a major source.

As reported in section 5.1.2.2, Facility-wide HAP emissions are less than 10 tons of a single HAP and less than 25 tons of aggregate HAPs. Therefore, the Facility will be an area source of HAP emissions. MACT standards that potentially apply to the proposed project are addressed below.

---

[10] EPA has since removed three HAPs from the list: caprolactum, ethylene glycol monobutyl ether, and methyl ethyl ketone (MEK).

Parts 61 and 63, Subpart A, General Provisions
Subpart A under both parts establishes general requirements for reporting, testing, monitoring, and recordkeeping for any major source facility. The Facility must send notifications to EFSEC and EPA of anticipated and actual start-up dates as defined in §63.9 and submit reports summarizing operations, emissions, and compliance with regulations and limits as specified in the standard.

Part 61, Subpart M – National Emission Standards for Asbestos
Subpart M of 40 CFR 61 establishes requirements related to asbestos in the event of demolition or remodeling. The Facility will comply with these requirements.

Part 63, Subpart Y – National Emission Standards for Hazardous Air Pollutants for Marine Tank Vessel Loading Operations
The emission standard provisions of Subpart Y apply to existing and new marine terminals that are major sources of HAPs or are associated with a major source of HAPs (such as a refinery). As noted above, the Facility is not in itself a major source of HAPs and is not associated with a major source of HAPs. However, area sources, such as the Facility, are subject to the emission estimation (40 CFR §63.565(l)) and recordkeeping (40 CFR §63.567(j)(4)) requirements, and must meet the USCG's submerged fill standards (40 CFR §153.282). Because the Facility's crude oil throughput will be less than 200 million barrels per year, it will not be subject to the reasonably achievable control technology emission standards, per 40 CFR §63.560(b)(2).

Part 63, Subpart DDDDD -- National Emission Standards for Hazardous Air Pollutants for Major Sources: Industrial, Commercial, and Institutional Boilers and Process Heaters
The provisions of Subpart DDDDD apply to boilers and process heaters at major sources of HAPs. Because the Facility is not a major source of HAPs, Subpart DDDDD does not apply to the Facility boilers.

Part 63, Subpart JJJJJ -- National Emission Standards for Hazardous Air Pollutants for Industrial, Commercial, and Institutional Boilers Area Sources
The Facility will be classified as an area source of HAPs and will operate boilers. However, gas-fired boilers are not subject to Subpart JJJJJJ. The Facility boilers will combust exclusively natural gas, so Subpart JJJJJ is not applicable.

Part 63, Subpart ZZZZ -- National Emission Standards for Hazardous Air Pollutants for Stationary Reciprocating Internal Combustion Engines
The provisions of Subpart ZZZZ apply to stationary reciprocating internal combustion engines (RICE) located at major and area sources of HAP emissions. A new stationary RICE located at an area source (such as the emergency fire water pump engines) must meet the requirements of Subpart ZZZZ by meeting the requirements of NSPS Subpart IIII for compression ignition engines. No further requirements apply for such engines under Subpart ZZZZ.

5.1.3.1.3 State Emission Limits
General standards for maximum emissions from industrial air pollution sources in Washington are outlined in WAC 173-400-040. This section limits visible emissions to 20 percent opacity except for 3 minutes per hour; controls nuisance dust particulate matter fallout, fugitive dust, and odors; and limits SO_2 emissions to no more than 1,000 ppm (hourly average, 7 percent O_2, dry

basis). WAC 173-400-050 identifies emission standards for combustion and incinerator units, and limits process emissions to 0.1 grain per dry standard cubic foot at 7 percent O_2.

Washington also requires BACT for new and modified emissions units. A BACT analysis identifies pollutant-specific alternatives for emission control, and the pros and cons of each alternative. The determination of which control scenario best protects ambient air quality is made on a case-by-case basis and considers the technical, economic, energy, and environmental costs. Chapter 173-460 WAC requires that BACT also be employed to control emissions of TAPs (i.e., t-BACT). Generally, the same technologies or operations that reduce criteria pollutants also reduce TAPs.

5.1.3.2 Consistency with SWCAA Regulations

In addition to the general State emissions standards addressed in the preceding section, SWCAA has other regulations that would apply if the Facility were not subject to EFSEC's jurisdiction. Although these regulations are not directly applicable, this section evaluates SWCAA's regulations to demonstrate that the Facility will be designed and operated consistent with those local requirements.

5.1.3.2.1 SWCAA General Regulations

The SWCAA regulations generally mirror Ecology's emission limits for new sources, limiting exhaust plume opacity to 20 percent opacity except for 3 minutes of any hour, particulate matter emissions to 0.1 grain per dry standard cubic foot, and SO_2 emissions to 1,000 ppm. The Facility will comply with all local general emissions requirements because BACT imposes more stringent requirements.

5.1.3.2.2 SWCAA VOC Standards

SWCAA has established emission standards and control requirements for sources that emit VOCs. The Facility, as a source of VOC emissions, would be subject to the provisions of SWCAA 490 if it were under the jurisdiction of SWCAA.

SWCAA 490-040(2), covering petroleum liquid storage tanks requires that all fixed-roof tanks storing volatile organic petroleum liquids with a true vapor pressure as stored greater than 78 mm of Hg (1.5 psi) at actual monthly average storage temperatures, and having a capacity greater than 150,000 liters (40,000 gallons), shall comply with one of the following.

- (i) Meet the equipment specifications and maintenance requirements of the federal standards of performance for new stationary sources - Storage Vessels for Petroleum Liquids (40 CFR 60, subpart K); or

- (ii) Be retrofitted with a floating roof or internal floating cover using a metallic seal or a nonmetallic resilient seal at least meeting the equipment specifications of the federal standards referred to in SWCAA 490-040 (2)(a)(i) or its equivalent; or

- (iii) Be fitted with a floating roof or internal floating cover meeting the manufacturer's specifications in effect when installed.

SWCAA 490-040 also requires that all seals be maintained in good operating condition and that seal fabric shall contain no visible holes, tears, or openings.

The Facility storage tanks will employ a fixed roof and internal floating cover and would, therefore, comply with 490-040 if under the jurisdiction of SWCAA. The Facility is not subject to the provisions of SWCAA 490-201 because that rule addresses petroleum storage in external floating roof tanks only.

5.1.3.2.3 SWCAA Maintenance Plan Requirements

Portions of the Portland-Vancouver metropolitan area (including the Facility site) have exceeded ozone and carbon monoxide ambient air quality standards in the past. Although the area currently meets ambient air quality standards, industrial sources in the area are still governed by "maintenance" plans intended to ensure air quality in the area does not deteriorate to the point where ozone and CO ambient standards are exceeded again. SWCAA administers those plans in the Washington portion of the maintenance area with certain elements of the maintenance plan integrated into the SWCAA regulations. Each SWCAA requirement is presented after a bullet below, and followed by an explanation of how the Facility complies with that requirement.

- SWCAA 400-111, Requirements for New Sources in a Maintenance Plan Area: SWCAA 400-111 implements portions of the State Implementation Plan (SIP) for the Vancouver CO and ozone maintenance areas.[11] Both maintenance areas cover the same geographic area, extending over the urban and industrial regions of Vancouver. SWCAA 400-111 requires that no approval to construct a new source shall be granted unless:

  a) Emissions from all units will comply with applicable emissions standards, including NSPS and MACT standards.

  b) Emissions from the new source will be minimized to comply with emissions levels and other requirements within the maintenance plan.

  c) BACT will be employed for all pollutants emitted from units associated with the new source.

  d) Emissions from the new source will not cause any violation of an ambient air quality standard.

  e) The source will employ control equipment and take measures to control emissions of TAPs to comply with WAC 173-460.

[11] Vancouver, WA, ozone and carbon monoxide maintenance plans are available for download from http://www.swcleanair.org/maintenanceplans.html

Although the EFSEC approval process supersedes SWCAA regulations, the Facility would comply with this regulation were it subject to SWCAA jurisdiction.

- SWCAA 400-111(2) indicates that a source located within the maintenance area may have to apply Lowest Achievable Emission Rate (LAER) emission limits if any ambient air quality standard is violated within the CO or O_3 maintenance areas.

According to SWCAA (2007)[12], the region has been in compliance with CO NAAQS since 1992 and future exceedance is not anticipated. Also, according to SWCAA (2006)[13], the region is in compliance with the ozone standards and future exceedance is not expected in the immediate future. Facility-wide emissions of ozone precursors and carbon monoxide are low and do not threaten compliance with the CO and ozone ambient standards. Consequently, this regulation would not apply to the Facility even if it were subject to SWCAA regulations.

- SWCAA 400-111(5) states that if a new source located within the maintenance area is designated as "major"[14] then emission offsets are required. Offsets are reductions in pollutant emissions equivalent to or greater than the proposed increases, provided by other stationary sources emitting the same pollutant.

Because the Facility is not a major source of carbon monoxide or ozone precursors, offsets would not be required even if the Facility were subject to SWCAA regulations.

- SWCAA 400-113(3) requires that allowable emissions from a proposed new source do not result in a significant increase in ambient concentrations within a maintenance area. This provision, therefore, requires that a source demonstrate that the project emissions will not result in exceedance of significant impact levels (1 $\mu g/m^3$ NO_2 annual average, 0.5 mg/m^3 CO 8-hour average, or 2 mg/m^3 CO 1-hour average) within the Vancouver maintenance area. If a significant impact level (SIL) is exceeded, then emission offsets must be obtained. Offsets must be sufficient enough to lower the modeled ambient concentration below the indicated impact level.

This regulation is intended to ensure that sources outside the maintenance area do not adversely affect compliance within the maintenance area. As noted above, the Facility is within the maintenance areas but its emissions are below the major source thresholds that trigger LAER and offsets.

---

[12] SWCAA (2007): Vancouver Air Quality Maintenance Area Second 10-year Carbon Monoxide Maintenance Plan, Supplement to the Washington State SIP, SWCAA, March 1, 2007.
[13] SWCAA (2006): Vancouver Portion of the Portland-Vancouver AQMA Ozone Maintenance Plan, Supplement to the Washington State SIP, SWCAA, November 2, 2006.
[14] A "major" stationary source is defined in SWCAA 400-030 (62)(a) as a source located in a maintenance plan or non-attainment area that emits or has the potential to emit 100 tons per year or more of any criteria pollutant (lower thresholds apply for PM and CO in non-attainment areas).

5.1.3.3 Preconstruction Permitting

5.1.3.3.1 Notice of Construction and Application for Approval

WAC 173-400-110 requires an NOC application for the construction of new air contaminant sources in Washington. SWCAA maintains a similar regulation (SWCAA 400-109) for new or modified sources in its jurisdiction. The NOC application provides a description of the facility and an inventory of pollutant emissions and controls. The reviewing agency, EFSEC, considers whether BACT has been employed and evaluates ambient concentrations resulting from these emissions to ensure compliance with ambient air quality standards. Pollutant emissions not governed by the Prevention of Significant Deterioration (PSD) permit process are addressed in an Order of Approval that results from the NOC application. In the case of the Facility, all pollutants are addressed in the NOC application.

5.1.3.3.2 Prevention of Significant Deterioration (PSD)

The PSD regulations were established by EPA to ensure that new or expanded major stationary sources that emit CAA-regulated pollutants above a significance rate do not cause air quality in areas that currently meet the standards (i.e., attainment areas) to deteriorate significantly. The Facility is not subject to PSD regulations because it will not emit any CAA-regulated pollutants above the applicable PSD significance rate (see Table 5.1-11).

5.1.4 Local Air Quality Impact Assessment

This section describes the local Air Quality Impact Assessment that has been conducted for the Facility. Computer-based dispersion modeling techniques were applied to simulate dispersion of toxic and criteria pollutant releases from Facility emissions units to estimate pollutant concentrations in the neighboring area. The results of the modeling analyses are used to assess compliance with NAAQS, WAAQS, and Ecology's ASILs for TAPs.

The dispersion modeling techniques employed in the analysis follow the EPA regulatory guidelines (40 CFR Part 51, Appendix W). These guidelines include recommendations for model selection, data preparation, and model application, but allow flexibility on a case-by-case basis.

Section 5.1.4.1 summarizes stack parameters used for the simulation. Section 5.1.4.2 describes the data used to characterize existing ambient air quality and discusses the meteorological data used in the dispersion modeling. Dispersion model selection and application are described in section 5.1.4.3, followed by a summary of the model results in section 5.1.4.4.

5.1.4.1 Stack Parameters, Building Dimensions, and Good Engineering Practice

In addition to emission rates, the modeling analysis requires estimates of the stack heights, building dimensions, and other parameters that characterize exhaust flows and/or atmospheric release characteristics from a facility. These release characteristics have an important influence on initial dispersion of emissions. The stack parameters used in the dispersion modeling simulation of Facility operations are presented in Table 5.1-19.

The effect of building wakes (i.e., downwash) on stack plumes was evaluated in accordance with EPA guidance. Direction-specific building data were generated for stacks below good engineering practice stack height, using the most recent version of the EPA Building Parameter Input Program – Prime (BPIP-Prime). The AERMOD model considers direction-specific downwash using both the Huber Snyder and Schulman-Scire algorithms, as represented in the BPIP-Prime. Figure 5.1-1 shows the major structures that were used in the BPIP-Prime analysis.

Table 5.1-19. Stack Parameters

Source	Stack Base Elevation Above Sea Level (m)	Stack Height (m)	Temperature (K)	Exit Velocity (m/s)	Stack Diameter (m)
Area 600 Boiler1	9	19.8	504	10.7	1.07
Area 600 Boiler2	9	19.8	504	10.7	1.07
Area 600 Boiler3	9	19.8	504	10.7	1.07
VCU1	10	7.36	1,478	39.6	1.12
VCU2	10	7.36	1,478	39.6	1.12
VCU3	10	7.36	1,478	39.6	1.12
VCU4	10	7.36	1,478	39.6	1.12
VCU5	10	7.36	1,478	39.6	1.12
VCU6	10	7.36	1,478	39.6	1.12
VCU7	10	7.36	1,478	39.6	1.12
VCU8	10	7.36	1,478	39.6	1.12
Emergency Fire Water Pump 1	10	3.35	787	73.6	0.10
Emergency Fire Water Pump 2	11	3.10	787	73.6	0.10
Emergency Fire Water Pump 3	9	3.10	787	73.6	0.10

Note: m = meter; m/s = meter per second; K = Degrees Kelvin

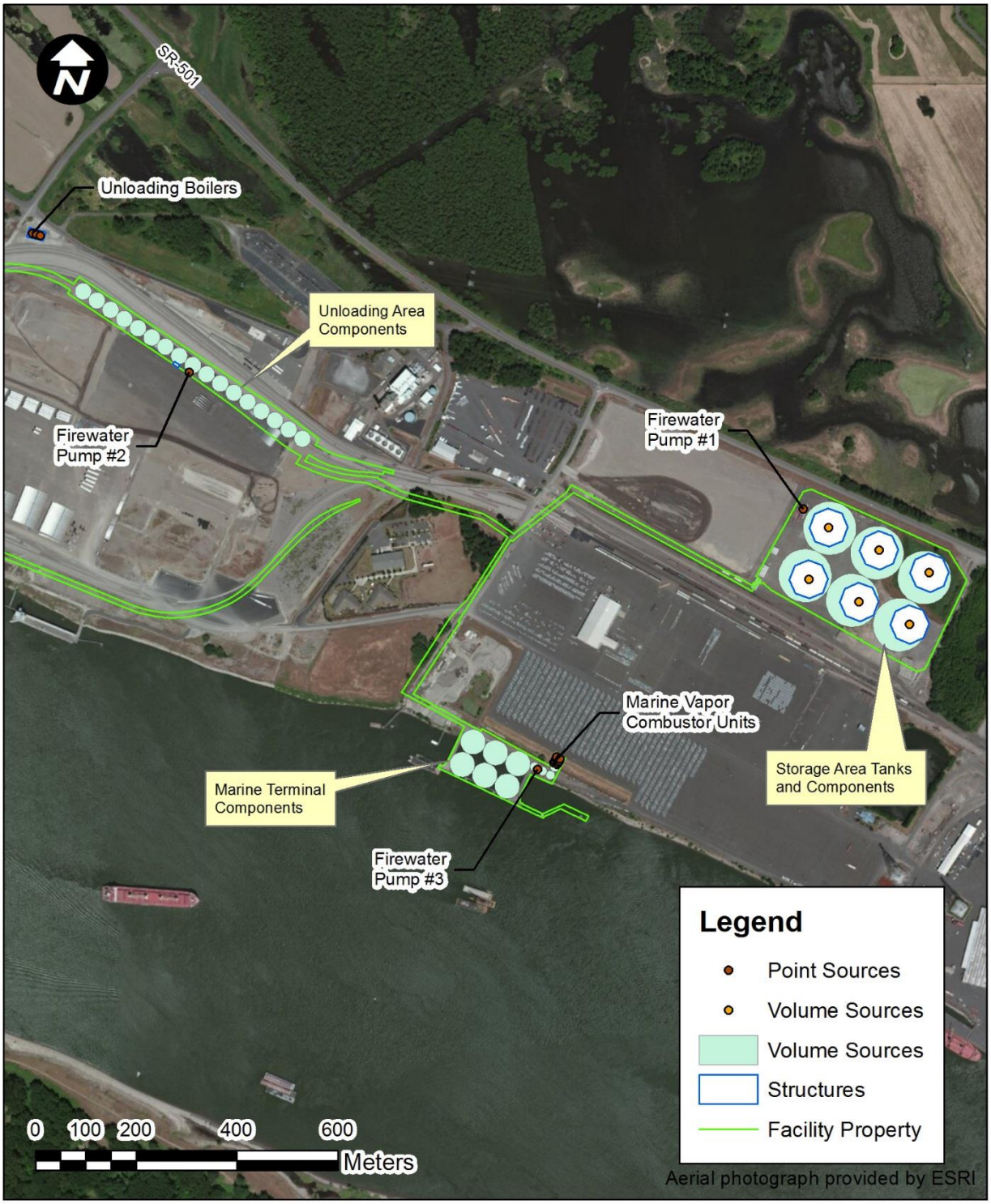

BergerABAM

Figure 5.1-1. Site Plan with Emission Units and Property Boundary

5.1.4.2 Local Meteorology and Air Quality

5.1.4.2.1 Local Meteorology

A meteorological database for the dispersion modeling was constructed using the best available surface and upper air data. A survey of available meteorological data was conducted for use in the simulations. For surface meteorological data, the closest and most representative National Weather Service (NWS) station was Pearson Field, located in Vancouver. The most appropriate upper air data was from McNary field airport in Salem, Oregon. A five-year meteorological database was created using the most recent available years of data: 2008 through 2012. Pearson Field was judged to be the best available source of meteorological data for air quality dispersion modeling. The meteorological station at Pearson Field is the station closest to the proposed project site that is part of the NWS Automatic Surface Observing System, and provides 1-minute wind speed and wind direction data that are used to resolve calm and variable wind conditions, as recommended by the EPA.

Figure 5.1-2 displays a wind rose constructed from the five years of hourly meteorological data. The average wind velocity for the five-year period is 2.32 meters per second and periods of calm winds occur 5.72 percent of the time.

Additional meteorological variables and geophysical parameters are required by the dispersion modeling analysis to estimate the surface energy fluxes and construct boundary layer profiles. Surface characteristics, including the surface roughness length, albedo, and Bowen ratio, were assigned on a sector-by-sector basis using land use within one kilometer of Pearson Field. The U.S. Geological Survey (USGS) 1992 National Land Cover Dataset (NLCD92) land use used in the analysis has a 30-meter mesh size and over 30 land use categories.[15]

The NLCD92 data were processed using the utilities that accompany the AERMOD modeling system. Land use was characterized in eight upwind sectors surrounding the site. Within each sector, a weighted average surface roughness length, albedo, and Bowen ratio was calculated from the characteristics recommended for each land use by the AERSURFACE program. Arithmetic averages were used for the albedo and Bowen ratio, while a geometric or logarithmic average was used for surface roughness length.

The EPA meteorological program, AERMET, was used to combine the Pearson Field observations with twice daily upper air soundings from Salem and derive the necessary variables for AERMOD. The upper air data were used to estimate the temperature lapse rate aloft and subsequently by AERMET to predict the development of the mixed layer height. The Bulk-Richardson option was used to estimate dispersion variables and surface energy fluxes during nocturnal periods, while solar radiation and wind speed were used by AERMET to estimate these same variables during the day. The sigma-theta data from the Pearson Field site were passed through by AERMET to AERMOD for the lateral dispersion algorithms.

[15] The USGS NLCD92 data is described and can be accessed at http://landcover.usgs.gov/natllandcover.php.

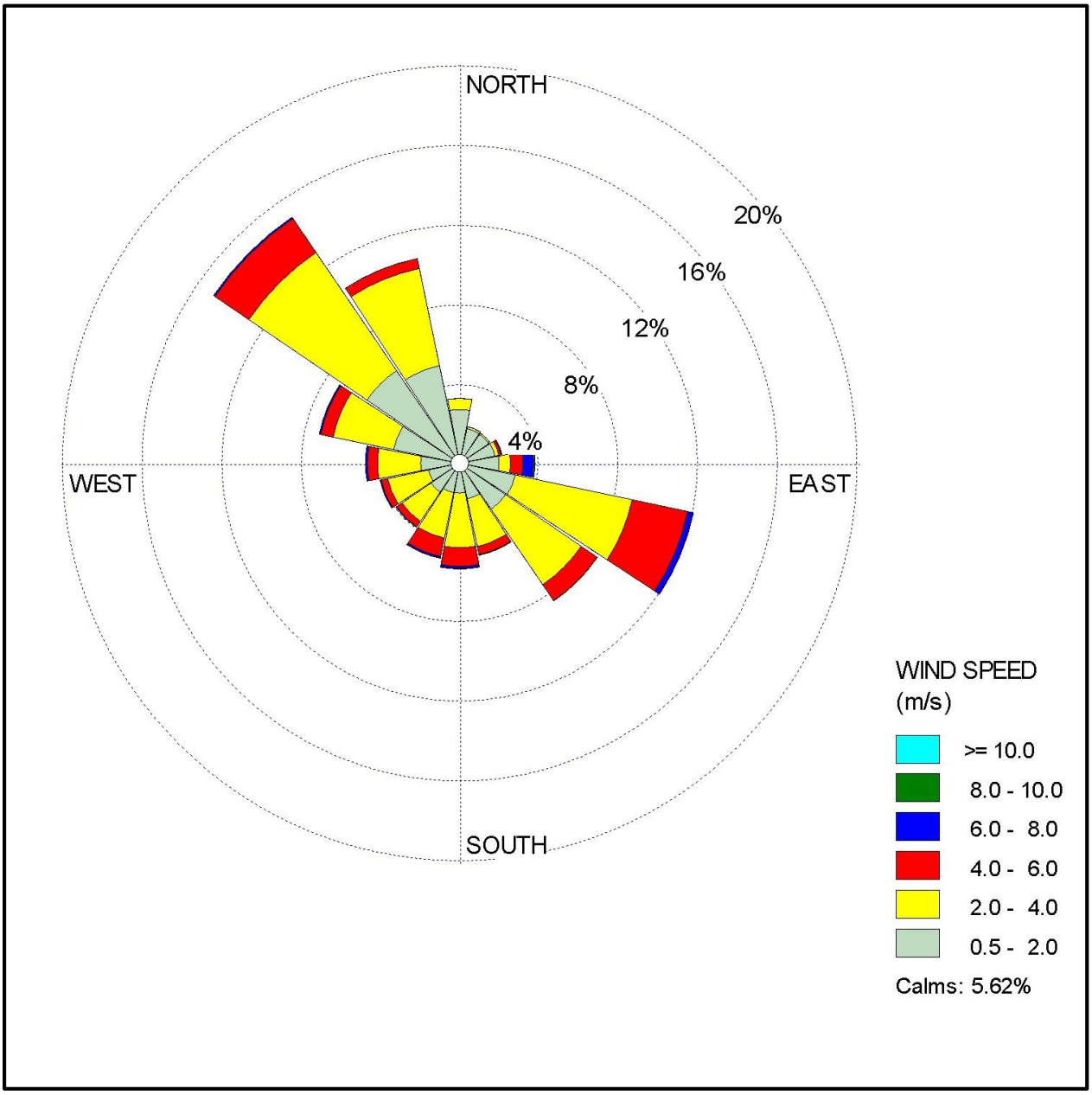

BergerABAM	**Figure 5.1-2. Pearson Field Airport Windrose from 2008-2012**

5.1.4.2.2 Background Air Quality

Ecology and EPA designate regions as being "attainment" or "nonattainment" areas for particular air pollutants based on monitoring information collected over a period of years. Attainment status is, therefore, a measure of whether air quality in an area complies with the health-based ambient air quality standards. The Facility is located in a region considered to be in attainment for all criteria pollutants, but it remains subject to maintenance plans that ensure continued compliance with ozone and carbon monoxide ambient standards.

Existing air quality at the Facility site can be inferred from several sources of information. First, conditions can be estimated from measurements collected by Ecology and the Oregon Department of Environmental Quality air quality monitoring networks. Current and archived air quality data are accessible from the EPA AirData website.[16] The 2012 AirData database files for several monitoring sites near the project site were accessed to characterize background air quality. The values reported at these sites represent the conservatively highest background air quality values in the region because monitoring sites are often specifically selected to identify the highest regional pollutant concentrations. Air quality values for each pollutant were estimated using measurements from the following monitors.

CO: SE Lafayette, Portland, Oregon, EPA AQS Site No. 41-051-0080 (about 10 miles southeast of the project site), 2012 maximum and second highest maximum values.

NO_2: SE Lafayette, Portland, Oregon, 2011 Annual mean, 2012 1-hour maximum and 98th percentile daily maximums.[17]

Ozone: Sauvie Island, Oregon, EPA AQS Site No. 41-009-0004 (about 8 miles north-northwest of the project site), 2011 8-hour maximum and fourth highest 8-hour maximum values.

$PM_{2.5}$: Fourth Plain Boulevard East, Vancouver, Washington, EPA AQS Site No. 53-011-0013 (about 10 miles east of the project site), 2012 24-hour maximum and 98th percentile concentrations, annual average estimated using annual average of 1-hour values.

PM_{10}: N. Roselawn Emerson Playfield, Portland, Oregon, EPA AQS Site No. 41-051-0246 (about 7 miles southeast of the project site), 2012 24-hour average maximum value and 98th percentile 24-hour average value, annual average estimated using annual average of 24-hour values.

SO_2: SE Lafayette, Portland, Oregon, EPA AQS Site No. 41-051-0080, 2012 maximum and 99th percentile 1-, 3-, and 24-hour values. Annual average estimated using annual average of 1-hour values.

Background concentrations can also be estimated using a tool provided by Ecology. Ecology provides the 2009-2011 "design values" for background air quality throughout the state using the output from the AIRPACT-3 regional air quality model, with adjustments from assimilated monitor data. The tool is a product of the Northwest International Air Quality Environmental

---

[16] U.S. EPA AirData website archive of monitoring data. http://www.epa.gov/airquality/airdata/.

[17] Reported in Oregon Department of Environmental Quality (2012): 2011 Oregon Air Quality Data Summaries, DEQ 11-AQ-021.

Science and Technology Consortium and is used to support air permitting and regulation in the State.[18] Use of this database may provide a more accurate estimate of the actual background air quality at the project site than the conservative measurements from the monitoring network. Design values were collected in July 2013 using the tool for project site coordinates (46.643 Lat., -122.705 Long.).

The background air quality values estimated from these sources of information are listed in Table 5.1-20.

Table 5.1-20. Existing Air Quality

Pollutant	Averaging Period	State Monitoring Network Maximum Value	State Monitoring Network Regulatory Value[1]	Design Value[2]
CO	1-hour	3.8 ppm	3.1 ppm (2nd high)	2.065 ppm
	8-hour	2.3 ppm	2.2 ppm (2nd high)	1.276 ppm
NO_2	1-hour	59 ppb	36 ppb (98th %-ile.)	37 ppb
	Annual	9 ppb	9 ppb	7 ppb
O_3	1-hour	0.068 ppm	0.064 ppm (4th high)	NA[3]
	8-hour	0.057 ppm	0.053 ppm (4th high)	0.056 ppb
$PM_{2.5}$	24-hour	31.2 µg/m^3	20.5 µg/m^3 (98th %-ile)	20 µg/m^3
	Annual	7.0 µg/m^3	NA[3]	5.8 µg/m^3
PM_{10}	24-hour	36 µg/m^3	34 µg/m^3 (98th %-ile)	31 µg/m^3
SO_2	1-hour	9.8 ppb	4.9 ppb (99th %-ile)	9.5 ppb
	3-hour	7.0 ppb	2.7 ppb (99th %-ile)	7.1 ppb
	24-hour	2.5 ppb	1.7 ppb (99th %-ile)	3.6 ppb
	Annual	1.5 ppb	NA[3]	3 ppb

Notes:
[1] Values that are applicable for comparison to the NAAQS.
[2] Facility site Design Value obtained from NW-Airquest/Dept. of Ecology
[3] NA: Not available

5.1.4.3 Dispersion Model Selection and Application

The most recent version (14134) of AERMOD was used for the air quality modeling. AERMOD is the preferred EPA guideline model for near-field simulation of industrial stack releases. AERMOD was used to model concentrations of pollutants having short-term (e.g., 1 to 24 hours) ambient standards with the appropriate averaging time selected. Modeling of pollutants with annual standards (i.e., $PM_{2.5}$, SO_2 and NO_2) was conducted using AERMOD with the PERIOD option.

An analysis of the land use adjacent to the Facility site was conducted in accordance with Section 7.2.3 of the Guideline on Air Quality Models (EPA, 2005 and Auer, 1978). The land use analysis within 3 kilometers of the site was determined to be predominantly rural, such that rural

[18] NW-Airquest "design values" tool website: http://lar.wsu.edu/nw-airquest/index.html

dispersion coefficients were selected for all Facility simulations. All AERMOD regulatory default settings were selected.

Concentrations attributable to Facility emissions units are calculated at simulated locations referred to as model receptors. The receptor grids used in the modeling analyses are as follows.

- 25-meter spacing along the property line and extending from the property line out to 3 km beyond the property line;
- 50-meter spacing from 3 km to 4 km from the property line;
- 200-meter spacing from 4 km to 5 km from the property line; and
- 500-meter spacing from 5 km to 10 km from the property line.

Actual Universal Transverse Mercator (UTM) NAD27 coordinates and digital terrain data provided by the USGS were used in all receptor grids.

Figure 5.1-3 shows the receptor grids used in the modeling overlaid on a topographic map.

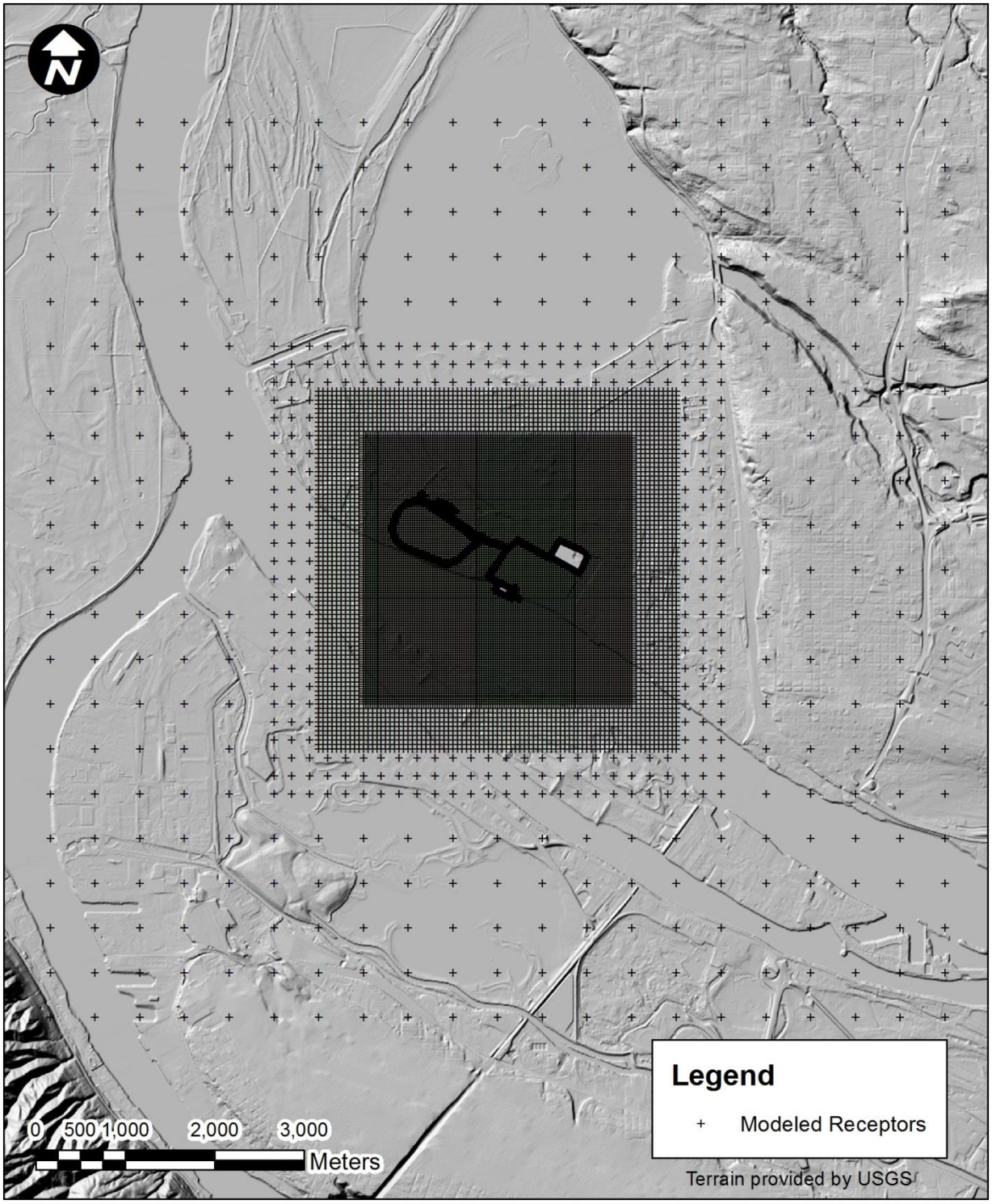

BergerABAM

Figure 5.1-3. Modeling Receptor Grids

5.1.4.4 Dispersion Model Results

5.1.4.4.1 Criteria Pollutants

The criteria pollutant concentrations predicted using AERMOD to evaluate Facility operations are presented in Table 5.1-21. All maximum modeled concentrations occurred within 1 km of the Facility. In order to assess the significance of the predicted values, the maximum predicted criteria pollutant concentrations attributable to the Facility are compared with the EPA SILs; concentrations below the SILs are considered to be insignificant, and these pollutants do not require cumulative modeling with other sources to demonstrate compliance with ambient air quality standards.

Table 5.1-21. Project-only Modeling Results

Pollutant	Averaging Period	Design Concentration[1] (µg/m^3)	UTM Easting[2] (m)	UTM Northing[2] (m)	SIL[3] (µg/m^3)
CO	1-hour	90.6	520704	5055515	2,000
	8-hour	76.8	520704	5055515	500
NO_2	1-hour	22.1	520704	5055515	7.5
	Annual	0.588	520701	5055505	1
PM_{10}	24-hour	13.2	520698	5055496	5
$PM_{2.5}$	24-hour	10.5	520701	5055505	1.2
	Annual	0.295	520701	5055505	0.3
SO_2	1-hour	18.2	520704	5055515	7.8
	3-hour	17.2	520704	5055515	25
	24-hour	12.8	520704	5055515	5
	Annual	0.207	520701	5055505	1

Notes:
[1] Maximum concentration (highest 1st high) except for 1-hour NO_2, 24-hour $PM_{2.5}$, annual $PM_{2.5}$, and 1-hour SO_2, which are the highest of the 5-year averages of the maximum modeled concentrations predicted each year at each receptor.
[2] UTM Zone 10
[3] From WAC 173-400-113(4)(a)

Predicted CO, 3-hour average SO_2, and annual NO_2, $PM_{2.5}$, and SO_2 concentrations attributable to Facility emissions units are less than the SILs. A concentration less than the SIL indicates that emissions of that pollutant attributable to the Facility does not have the potential to significantly affect ambient air concentrations.

Short-term concentrations of NO_2, $PM_{2.5}$, PM_{10}, and SO_2 exceed their respective SILs; it is common to evaluate cumulative concentrations by adding existing "background" concentrations to the predicted concentrations attributable to the Facility. The background concentrations summarized in section 5.1.4.2.2, provide a conservative assessment of background air quality. Table 5.1-22 identifies cumulative concentrations based on the sum of these conservative background concentrations and the modeled design concentrations attributable to the Facility. The analysis indicates that when predicted design concentrations are added to the background concentrations, the resulting total concentrations comply with NAAQS/WAAQS.

Table 5.1-22. Comparison of Cumulative Concentrations with Ambient Air Quality Standards

Pollutant	Averaging Period	Modeled Design Concentration[1]	Background Concentration	Total Concentration[2]	NAAQS/ WAAQS
		($\mu g/m^3$)			
CO	1-hour	87.5	2,364	2,452	40,000
	8-hour	69.4	1,461	1,530	10,000
NO_2	1-hour	19.6	70	89.6	188
	Annual	0.588	13	13.6	100
PM_{10}	24-hour	10.1	31	41.1	150
$PM_{2.5}$	24-hour	6.59	20	26.6	35
	Annual	0.295	6	6.30	12
SO_2	1-hour	16.9	25	41.9	196
	3-hour	17.1	19	36.1	1,300
	24-hour	10.4	9	19.4	365
	Annual	0.207	8	8.21	52

Notes:

[1] The forms of the design concentrations are as follows:

CO, 1- & 8-hour average & SO2, 3- & 24-hour average – highest 2nd high concentration over the five modeled years of meteorological data

NO_2, 1-hour average – 98th percentile of the annual distribution of daily maximum 1-hour average concentrations averaged at each receptor over the five modeled years of meteorological data

NO_2 & SO_2, annual average – maximum annual average concentration

PM_{10}, 24-hour average – highest 6th high concentration over the five modeled years of meteorological data

$PM_{2.5}$, 24-hour average – 98th percentile of the annual distribution of 24-hour average concentrations averaged at each receptor over the five modeled years of meteorological data

$PM_{2.5}$, annual average – maximum annual average concentration averaged over the five modeled years of meteorological data

SO_2, 1-hour average – 99th percentile of the annual distribution of daily maximum 1-hour average concentrations averaged at each receptor over the five modeled years of meteorological data

[2] Total Concentration = Modeled Design Concentration + Background Concentration

5.1.4.4.2 Toxic Air Pollutants

WAC 173-460 regulates emissions of almost 400 substances as TAPs. When anticipated emissions of a given TAP exceed a prescribed "Small Quantity Emission Rate for that TAP, EFSEC requires permit applications to include dispersion modeling of TAP emissions and to include a comparison of calculated concentrations attributable to the project with the ASILs. If calculated concentrations are less than the ASILs, a permit can be granted without further analysis. Otherwise, the Applicant must revise the project or submit a health risk assessment demonstrating that toxic emissions from the project are sufficiently low to protect human health. Concentrations below the ASILs indicate insignificant potential for adverse health effects from these chemicals.

Table 5.1-12 identifies Facility-wide TAP emissions and was used to determine whether Facility-wide emissions of each TAP exceed its SQER. A dispersion modeling analysis for those TAPs emitted at rates exceeding the SQERs was conducted in the same manner as for the criteria pollutants.

Maximum predicted TAP concentrations attributable to the Facility emission units are compared with Ecology ASILs in Table 5.1-23. Predicted concentrations are less than the Ecology ASILs for all TAPs.

Table 5.1-23. Maximum Predicted TAP Concentrations

CAS #	Compound	Averaging Period	Maximum Predicted Concentration ($\mu g/m^3$)	ASIL ($\mu g/m^3$)
10102-44-0	Nitrogen dioxide	1-hour	22.6	470
7446-09-5	Sulfur dioxide	1-hour	18.6	660
7783-06-4	Hydrogen Sulfide	24-Hour	1.55E-01	2.00E+00
57-97-6	7,12-Dimethylbenz(a)anthracene	Annual	8.41E-07	1.41E-05
7440-38-2	Arsenic	Annual	1.05E-05	3.03E-04
71-43-2	Benzene	Annual	2.29E-02	3.45E-02
7440-43-9	Cadmium	Annual	5.78E-05	2.38E-04
18540-29-9	Chromium, (hexavalent)	Annual	2.94E-06	6.67E-06
N/A	Diesel Engine Particulate	Annual	1.45E-03	3.33E-03
50-00-0	Formaldehyde	Annual	3.94E-03	1.67E-01

Attachment 1

Tesoro Savage Vancouver Energy Distribution Terminal
Vancouver, Washington

Best Available Control Technology (BACT) Analysis

August 2014

Prepared by: ENVIRON

Job No. A13.0267.00

Best Available Control Technology (BACT) Analysis

TABLE OF CONTENTS

1 INTRODUCTION 1

1.1 PROJECT DESCRIPTION 2

1.2 BACT REVIEW PROCESS 2

2 NATURAL GAS-FIRED BOILER BACT ANALYSIS 4

2.1 IDENTIFY COMMERCIALLY-AVAILABLE EMISSION REDUCTION ALTERNATIVES 4

2.2 ELIMINATE TECHNICALLY INFEASIBLE ALTERNATIVES 4

2.3 NO_X BACT 5

2.3.1 Ranking of Remaining Alternatives 5
2.3.2 Consideration of Energy, Environmental and Cost Factors 5
2.3.3 Proposed BACT Limits and Control Option 5

2.4 CO AND VOC BACT 5

2.4.1 Ranking of Available Control Technologies 6
2.4.2 Consideration of Energy, Environmental and Cost Factors 6
2.4.3 Proposed BACT Limits and Control Option 7

2.5 PM AND SO_2 BACT 7

2.5.1 Ranking of Available Control Technologies 7
2.5.2 Proposed BACT Limits and Control Option 7

2.6 STARTUP AND SHUTDOWN BACT 7

2.7 TOXIC AIR POLLUTANT BACT 7

3 MARINE VESSEL LOADING BACT ANALYSIS 8

3.1 IDENTIFY COMMERCIALLY-AVAILABLE EMISSION REDUCTION ALTERNATIVES 8

3.2 ELIMINATE TECHNICALLY INFEASIBLE ALTERNATIVES 8

3.3 RANKING OF REMAINING ALTERNATIVES 9

3.4 CONSIDERATION OF ENERGY, ENVIRONMENTAL AND COST FACTORS 9

3.5 PROPOSED BACT LIMITS AND CONTROL OPTION 9

4 MARINE VAPOR COMBUSTION UNIT BACT ANALYSIS 9

4.1 IDENTIFY COMMERCIALLY-AVAILABLE EMISSION REDUCTION ALTERNATIVES 9

4.2 ELIMINATE TECHNICALLY INFEASIBLE ALTERNATIVES 10

4.3 RANKING OF REMAINING ALTERNATIVES 10

4.4 CONSIDERATION OF ENERGY, ENVIRONMENTAL AND COST FACTORS 11

4.5 PROPOSED BACT LIMITS AND CONTROL OPTION 11

5 CRUDE OIL STORAGE TANK BACT ANALYSIS 11

5.1 IDENTIFY COMMERCIALLY-AVAILABLE EMISSION REDUCTION ALTERNATIVES 11

5.2 ELIMINATE TECHNICALLY INFEASIBLE ALTERNATIVES 13

5.3 RANKING OF REMAINING ALTERNATIVES 13

5.4 CONSIDERATION OF ENERGY, ENVIRONMENTAL AND COST FACTORS 14

5.5 PROPOSED BACT LIMITS AND CONTROL OPTION 15

6 COMPONENT LOSSES BACT ANALYSIS 15

6.1 IDENTIFY COMMERCIALLY-AVAILABLE EMISSION REDUCTION ALTERNATIVES 15

6.2 ELIMINATE TECHNICALLY INFEASIBLE ALTERNATIVES 16

6.3 RANKING OF REMAINING ALTERNATIVES 16

6.4 CONSIDERATION OF ENERGY, ENVIRONMENTAL AND COST FACTORS 17

6.5 PROPOSED BACT LIMITS AND CONTROL OPTION 17

7 EMERGENCY ENGINE BACT ANALYSIS 17

7.1 PROCESS DESCRIPTION 17

7.2 NO_X BACT 17

7.2.1 Available Control Technologies and Technical Feasibility 17
7.2.2 Energy and Environmental Considerations 18
7.2.3 Ranking of Control Options 19
7.2.4 Economic Analysis for Controls 19
7.2.5 Proposed BACT 19

7.3 CO AND VOC BACT 20

7.3.1 Technically-Feasible Controls 20
7.3.2 Cost-Effectiveness Analysis 20
7.3.3 Proposed BACT 20

7.4 SO_2 AND PM BACT 20

8 TAPS BACT 21

LIST OF TABLES

Table 1-1.Summary of Proposed BACT 1

Table 5-1. Summary of VOC BACT Determinations for Crude Oil Tanks 12

Table 6-1. Summary of BACT Determinations for Component Losses from the RBLC 16

Table A-1. Recent RBLC Entries for Natural Gas-Fired Boilers Less Than 100 MMBtu/hr 22

Table A-2. Fugitive Emissions Regulations Comparison Table 27

Table A-3. Recent BACT Determinations for Internal Combustion Emergency Fire Pump Engines ≤ 500 HP 37

1 INTRODUCTION

In Washington, Best Available Control Technology (BACT) is required for new and modified industrial sources of criteria and toxic air pollutants (TAPs). This document presents a BACT analysis for new emission units associated with the Tesoro Savage Vancouver Energy Distribution Terminal (Facility). The basis for the emissions-related analyses is a maximum design throughput of 360,000 barrels of crude oil per day and year-round operation (365 days per year). The proposed project, as currently configured, will involve the following major emission units and processes:

- Three natural gas-fired package boilers,[1] each with a nominal heat input capacity of 62 million British thermal units per hour (MMBtu/hr), that will provide steam to heat crude oil railcars before unloading;
- Six crude oil tanks totaling approximately two million barrels of usable storage;
- Crude oil receiving and handling facilities for railcars, storage tanks, and vessels;
- Three nominal 225-hp diesel engines to power emergency fire water pumps; and
- Fugitive emissions from piping components.

Table 1-1 provides a summary of proposed BACT for each emission unit.

Table 1-1.Summary of Proposed BACT

Emission Unit	Pollutant	Proposed Means of Achieving BACT
Unloading Area Boilers	NO_X	Ultra-Low NO_X Burners
	CO & VOCs	Good Combustion Practices
	PM & SO_2	Use of Pipeline Natural Gas
	TAPs	Good Combustion Practices & Use of Pipeline Natural Gas
Marine Vessel Loading	VOCs & TAPs	Use of a Marine Vapor Combustion Unit
Marine Vapor Combustion Unit	NO_X	Good Combustion Practices
	CO & VOCs	Good Combustion Practices
	PM & SO_2	Use of Pipeline Natural Gas
	TAPs	Good Combustion Practices & Use of Pipeline Natural Gas
Crude Oil Storage Tanks	VOCs & TAPs	Fixed-Roof Tank with an Internal Floating Roof with Primary and Secondary Seals
Fugitive Piping Component Leaks	VOCs & TAPs	Leak Detection and Repair Program that Meets the Requirements of 40 CFR 63 Subpart H

[1] Only two of the three boilers in the unloading area will be operated at any given time, except occasionally for a brief period when the third boiler is started up as one shuts down.

Emission Unit	Pollutant	Proposed Means of Achieving BACT
Emergency Firewater Pump Engines	NO_X	Compliance with 40 CFR 60 Subpart IIII
	CO & VOCs	Compliance with 40 CFR 60 Subpart IIII
	PM & SO_2	Use of Ultra-Low Sulfur Diesel and Compliance with 40 CFR 60 Subpart IIII
	TAPs	Use of Ultra-Low Sulfur Diesel and Compliance with 40 CFR 60 Subpart IIII

1.1 Project description

The Facility will unload crude oil delivered by railcar and load crude oil to vessels. As necessary, crude oil will be stored in onsite tanks. Steam, provided by natural gas-fired boilers, will be used as needed to heat, and thereby decrease the viscosity of, certain crude oils to allow it to flow more easily from railcars. A network of pipes, and associated components (i.e., valves, pumps, etc.), will be used to convey crude oil from the railcar unloading facility to the tanks, and from the tanks for the marine terminal, where crude oil will be loaded onto vessels.

1.2 BACT Review Process

BACT, as it applies to regulated pollutants not subject to major new source review, is defined in WAC 173-400-030 (and adopted by reference via WAC 463-78-005) as:

> "…an emission limitation based on the maximum degree of reduction for each air pollutant subject to regulation under chapter 70.94 RCW emitted from or which results from any new or modified stationary source, which the permitting authority, on a case-by-case basis, taking into account energy, environmental, and economic impacts and other costs, determines is achievable for such source or modification through application of production processes and available methods, systems, and techniques, including fuel cleaning, clean fuels, or treatment or innovative fuel combustion techniques for control of each such pollutant. "

BACT as it applies to sources located in attainment areas and subject to major new source review is almost identically defined in 40 CFR 52.21 (the PSD regulations, adopted by reference in WAC 463-78-005).

In a December 1, 1987 memorandum from the EPA Assistant Administrator for Air and Radiation, the agency provided guidance on the "top-down" methodology for determining BACT. The "top-down" process involves the identification of all applicable control technologies according to control effectiveness. Evaluation begins with the "top," or most stringent, control alternative. If the most stringent option is shown to be technically or economically infeasible, or if environmental impacts are severe enough to preclude its use, then it is eliminated from consideration and then the next most stringent control technology is similarly evaluated. This process continues until the BACT level under consideration cannot be eliminated by technical or economic considerations, energy impacts, or environmental impacts. The top control alternative that is not eliminated in this process becomes the proposed BACT basis.

This top-down BACT analysis process can be considered to contain five basic steps described below:

- Step 1: Identify all available emission reduction alternatives with practical potential for application to the specific emission unit for the regulated pollutant under evaluation;
- Step 2: Eliminate all technically infeasible alternatives;
- Step 3: Rank remaining alternatives by effectiveness;
- Step 4: Evaluate the economic, energy, and environmental impacts starting with the most effective alternative; and
- Step 5: Select BACT, which will be the most effective practical alternative not rejected in the previous steps.

Formal use of these steps is not always necessary. However, both EPA and the Washington Department of Ecology have consistently interpreted the statutory and regulatory BACT definitions as containing two core requirements, which EPA believes must be met by any BACT determination, irrespective of whether it is conducted in a "top-down" manner. First, the BACT analysis must include consideration of the most stringent available technologies: i.e., those that provide the "maximum degree of emissions reduction." Second, any decision to require a lesser degree of emissions reduction must be justified by an objective analysis of "energy, environmental, and economic impacts" contained in the record of the permit decisions.

Additionally, the minimum control efficiency to be considered in a BACT analysis must result in an emission rate no less stringent than the applicable New Source Performance Standard (NSPS) emission rate, if any NSPS standard for that pollutant is applicable to the source.

This BACT analysis was conducted in a manner consistent with this stepwise approach. Control options for potential reductions in criteria pollution emissions were identified for each emission unit. These options were identified by researching the EPA database known as the RACT/BACT/LAER[2] Clearinghouse (RBLC), drawing upon previous environmental permitting experience for similar units and surveying available literature. Available controls that are judged to be technically feasible are further evaluated based on an analysis of economic, environmental, and energy impacts.

Assessing the technical feasibility of emission control alternatives is discussed in EPA's draft "New Source Review Workshop Manual." Using terminology from this manual, if a control technology has been "demonstrated" successfully for the type of emission unit under review, then it would normally be considered technically feasible. For an undemonstrated technology, "availability" and "applicability" determine technical feasibility. An available technology is one that is commercially available; meaning that it has advanced through the following steps:

- Concept stage;
- Research and patenting;
- Bench scale or laboratory testing;
- Pilot scale testing;

[2] RACT is an acronym for Reasonably Available Control Technology, and LAER is an acronym for Lowest Achievable Emission Rate

- Licensing and commercial demonstration; and
- Commercial sales.

Suitability for consideration as a BACT measure involves not only commercial availability (as evidenced by past or expected near-term deployment on the same or similar type of emission unit), but also involves consideration of the physical and chemical characteristics of the gas stream to be controlled. A control method applicable to one emission unit may not be applicable to a similar unit, depending on differences in the gas streams' physical and chemical characteristics.

2 NATURAL GAS-FIRED BOILER BACT ANALYSIS

Three natural gas-fired package boilers will provide steam to heat certain crude oil to facilitate transfer by reducing the viscosity of the oil. The boilers, each with a nameplate firing rate of 62 MMBtu/hr, will be used to heat railcars. Tesoro-Savage expects to operate only two of the boilers at a given time; there would be one redundant boiler.

Utilization of the boilers will be dependent upon the quantity of crude oil that must be heated to achieve a viscosity conducive to transfer operations. The boilers could operate throughout the year (i.e., 8,760 hours per year), but at varying loads dictated by railcar arrival schedules and the viscosity of the crude oil contained in the railcars.

Pollutant emissions from the natural gas boilers are expected to include NO_X, PM (including PM_{10} and $PM_{2.5}$), CO, SO_2, VOCs, and TAPs.

2.1 Identify Commercially-Available Emission Reduction Alternatives

Review of the federal RBLC database and selected state permit information indicates that several emission reduction alternatives have been identified in BACT determinations. Table A-1 lists a number of recent BACT determinations associated with natural gas-fired boilers with capacities less than 100 MMBtu/hr. The RBLC database survey results indicate that available BACT options for the pollutants emitted from natural gas-fired boilers include:

- Good Combustion Practices (GCP)
- Low-NO_X burners (LNB)
- Ultra-Low-NO_X burners (ULNB)
- Oxidation Catalysts
- Flue Gas Recirculation (FGR)
- Selective Catalytic Reduction (SCR)
- Low sulfur fuels

2.2 Eliminate Technically Infeasible Alternatives

All emission reduction alternatives identified in the previous section are considered technically feasible for natural gas-fired boilers, except SCR, which is not technically feasible because of the inconsistent operating schedule of the proposed boilers. SCR systems utilize a catalyst to promote the reduction reaction between NO_X and ammonia (NH_3) at a lower temperature than it would otherwise occur. While catalysts are available that promote the reaction over a range of temperatures, a consistent temperature is required. For boilers that operate at a given load for

extended periods, such a system can provide a reduction in NO_X emissions. Boilers with fluctuating steam demands, such as those proposed for this project, variations in flue gas temperature can lead to ineffective NO_X reduction, and unacceptably high emissions of unreacted NH_3. For this reason, SCR is removed from consideration as BACT for reducing NO_X emissions from the proposed natural gas-fired boilers.

In the following sections, these controls will be ranked and evaluated for each pollutant for which BACT is required.

2.3 NO_X BACT

Several of the identified alternatives are commercially available combustion and post-combustion control technologies which are capable of reducing NO_X emission from a natural gas-fired boiler. These controls include low-NO_X burners and flue gas recirculation.

2.3.1 Ranking of Remaining Alternatives

In top-down order of decreasing stringency, the feasible NO_X controls are listed with the approximate emission factor achieved by each technology:

- Ultra-Low-NO_X Burners – 0.011 lb/MMBtu[3]
- Low-NO_X Burners with FGR – 0.032 lb/MMBtu[4]
- Low-NO_X Burners with GCP – 0.050 lb/MMBtu[4]
- Conventional Burners with GCP, Conventional Burners – 0.10 lb/MMBtu[4]

2.3.2 Consideration of Energy, Environmental and Cost Factors

Because Tesoro-Savage proposes to meet the most stringent emission rate, no evaluation of energy, environmental, or cost was conducted. However, were an environmental and/or energy evaluation performed, utilizing low-NO_X burners with SCR would be identified as having greater impacts than utilizing ultra-low-NO_X burners.

2.3.3 Proposed BACT Limits and Control Option

Tesoro-Savage proposes an emission factor of 0.011 lb/MMBtu as BACT for NO_X emitted by all three of the proposed natural gas-fired boilers, achieved using ultra-low NO_X burners.

2.4 CO and VOC BACT

The only post-combustion control available for reducing emissions of CO and VOCs emitted by the proposed boilers is an oxidation catalyst module. Based on the RBLC review presented in Table A-1, the range of BACT CO emission limits for recently permitted natural gas-fired boilers (since 2004) is from 0.037 lb/MMBtu to 0.08 lb/MMBtu, and the range for VOCs is 0.0044 lb/MMBtu to 0.0054 lb/MMBtu. BACT for CO and VOCs on most units in the RBLC is GCP.

---

[3] Provided by Cleaver Brooks; equivalent to 9 parts per million by volume.

[4] From EPA's AP-42, Section 1.4 (Natural Gas Combustion), Table 1.4-1.

2.4.1 Ranking of Available Control Technologies

The identified control technologies, GCP and oxidation catalyst, are considered technically feasible for gaseous fuel fired boilers. In top-down order of decreasing stringency, the feasible CO and VOC controls are listed with the approximate level of control that could be achieved:

- Oxidation Catalyst and GCP – CO - 0.0036 lb/MMBtu, VOC - 0.0025 lb/MMBtu
- GCP – CO - 0.036 lb/MMBtu, VOC - 0.005 lb/MMBtu

2.4.2 Consideration of Energy, Environmental and Cost Factors

The use of oxidation catalyst modules as add-on emission control is available and technically feasible for reduction in CO emissions from natural gas-fired boilers. These are in addition to combustion controls (i.e., GCP) in combination with Low-NO_X burners.

With respect to energy considerations, add-on post-combustion controls on boilers of the capacity range proposed will noticeably reduce the thermal efficiency of the unit. Catalyst modules increase the back-pressure downstream of the combustion chamber by between 0.05 and 0.5 in H_2O per inch of catalyst bed depth, depending upon design.[5] Secondary environmental impact issues associated with spent catalyst module disposal are common among boiler installations that employ post-combustion catalytic systems. While landfill disposal fees for spent catalyst are not expensive, the potential liability associated with disposal is difficult to assess from a monetary perspective. Catalyst recycling options are not fully developed, and have their own specific liabilities associated with transport, processing, and disposal of by-products.[6]

Prohibitively high annualized cost is the primary factor that argues against costly add-on control technologies for natural gas-fired boilers. Because the proposed boilers will not be operated at a consistent load, it is likely that the catalyst performance will be uneven (i.e., the maximum reduction of CO and VOCs may not be achieved at all times).

As demonstrated in the attached cost-effectiveness calculations, add-on CO and VOC control technology for the proposed boilers would be cost-prohibitive in terms of cost per ton abated. Assuming an oxidation catalyst could provide 90 percent reduction of CO and 50 percent reduction of VOCs consistently throughout the year (highly unlikely given the planned method of operation), implementation of a catalytic oxidizer on one of the boilers has an estimated annualized cost of over $138,000, and provides a combined CO and VOC reduction of 9.4 tons per year, compared with GCP. From these results, the cost-effectiveness of the catalytic oxidizer option is conservatively estimated to be just less than $15,000 per ton reduced. This cost is not economically feasible, and so catalytic oxidation is eliminated as a BACT alternative.

---

[5] Cooper, C.D. and F.C. Alley, "Air Pollution Control: A Design Approach," Waveland Press, 1994. Page 359.

[6] Electric Power Research Institute (EPRI), "Recycling and Disposal of Spent Selective Catalytic Reduction Catalyst," Report No. 1004888, October 2003.

2.4.3 Proposed BACT Limits and Control Option

Tesoro-Savage proposes that BACT for CO and VOCs from the proposed natural gas-fired boiler is 0.036 lb/MMBtu (approximately 50 ppm) for CO, and 0.005 lb/MMBtu for VOC, both achieved by employing GCP.

2.5 PM and SO_2 BACT

This BACT analysis assumes that all PM emissions from the proposed boilers are $PM_{2.5}$, and that the PM, PM_{10}, and $PM_{2.5}$ emission rates are all equivalent. Any reference to PM emissions in this BACT analysis represents all definitions of particulate matter emissions: PM, PM_{10}, and $PM_{2.5}$.

2.5.1 Ranking of Available Control Technologies

For these pollutants, the commercially-available control measures that are identified in the most-stringent BACT determinations are use of low-sulfur, pipeline natural gas, and GCP. Based on review of the RBLC database, a summary of which is presented in Table A-1, add-on controls were not implemented to achieve BACT limits for these pollutants. The ranges of BACT emission limits for these pollutants are:

- SO_2 – 0.0006 lb/MMBtu to 0.082 lb/MMBtu
- PM – 0.0044 lb/MMBtu to 0.0075 lb/MMBtu

The two most-stringent available technologies are to be adopted for the proposed boilers, so further evaluation is unnecessary.

2.5.2 Proposed BACT Limits and Control Option

The use of pipeline natural gas and GCP are proposed as BACT for PM and SO_2 emissions from the natural gas-fired boilers. Boiler vendor information indicates that the hourly average PM emission factor will be 0.0075 lb/MMBtu, and mass balance calculations based on the sulfur content of the expected source of natural gas indicates that the daily average SO_2 emission factor will be approximately 0.00725 lb/MMBtu. However, Tesoro-Savage does not propose that these emission factors be used as numeric permit limits. Instead, BACT should be considered the use of pipeline natural gas and GCP.

2.6 Startup and Shutdown BACT

Boilers startup and shutdown operations will be conducted as prescribed by the boiler manufacturer. Periods of overlapping operation will be minimized to avoid unnecessary fuel use and the corresponding emissions. The proposed boilers are high-efficiency, natural gas-fired units that are capable of starting and shutting down quickly, and perform consistently across a broad range of operating levels. Large field-erected boilers typically experience increased emissions per unit of heat input during startup and shutdown that are not relevant.

2.7 Toxic Air Pollutant BACT

Toxic air pollutant (TAP) compounds emitted by a natural gas-fired boiler are, in general, either volatiles (VOCs) or particles (PM). The proposed BACT for VOC and PM are also proposed to be BACT for VOC and PM TAPs, respectively. BACT for TAPs that contain chlorine (e.g., hydrogen chloride) and sulfur (e.g., sulfuric acid) is proposed to be the same as that

proposed for SO_2. For nitrogen-containing compounds (e.g., nitric oxide), BACT is proposed to be the same as that proposed for NO_X.

3 MARINE VESSEL LOADING BACT ANALYSIS

Crude oil will be transferred from the facility to vessels. During the loading process, vapors, and inert gas present in the tank before loading began will be displaced by the crude oil entering the tank, and some of the crude oil will volatilize as it is being loaded. To comply with US Coast Guard regulations (33 CFR 154 Subpart E), these vapors must be captured and diluted, enriched, or inerted. Inerting systems will be used on each vessel loaded at the facility.

Pollutant emissions from marine vessel loading are expected to include VOCs and TAPs.

3.1 Identify Commercially-Available Emission Reduction Alternatives

The federal RBLC database, facility permits, and other sources were reviewed to identify commercially-available alternatives to reduce emissions from marine vessel loading operations. indicates that emission reduction alternatives include:

- Volatility reduction
- Vapor balancing
- Vapor recovery units (VRU)
- Marine vapor combustion units (MVCU)

3.2 Eliminate Technically Infeasible Alternatives

Reducing the volatility of crude oil by heating and separating volatiles prior to transport is theoretically possible, but implementation of this technology is not yet at the research stage, and is, therefore, considered technically infeasible and removed from consideration.[7]

Vapor balancing is frequently used when tank trucks are loading underground tanks, where the vapors displaced from the underground tank are retrieved by the tank truck and returned to the loading terminal. However, vapor balancing is typically not used for marine loading because the on-shore source of the crude (i.e., railcars or tanks equipped with floating roofs) is not able to accept vapors from the vessel. Even if the shore-side vessel were properly equipped to receive the vapors, the temperatures of the supplying and receiving vessels may be different, which could pressurize or create a vacuum in one or both of the vessels. Also, vapors that remain from the previous contents of the marine vessel could potentially contaminate the on-shore vessel. For these reasons, vapor balancing is technically infeasible, and is removed from consideration.

Vapor combustion units and vapor recovery units are frequently used for various types of petroleum product loading to marine vessels, and are considered technically feasible.

---

[7] Rudd, Howard J, and Nikolas A. Hill. "Measures to Reduce Emissions of VOCs during Loading and Unloading of Ships in the EU." European Commission, Directorate General – Environment. Report No. AEAT/ENV/R/0469. August 2001. http://ec.europa.eu/environment/air/pdf/vocloading.pdf

3.3 Ranking of Remaining Alternatives

In top-down order of decreasing stringency, the feasible VOC and TAP controls are listed with the approximate control efficiency achieved by each technology:

- MVCU – 99 percent control or greater
- VRU – 99 percent control or greater

3.4 Consideration of Energy, Environmental and Cost Factors

The Facility is designed to employ an MVCU system to reduce VOC and TAP emissions. Because this is the most effective alternative, no additional evaluation of energy, environmental, or cost is necessary. MVCU systems are typically employed to control VOCs from crude oil loading operations because they are able to adapt to shifting quantities and types of VOCs as the nature of the crude loaded changes. A VRU system is not as adaptable, and is, therefore, more often applied to smaller loading operations with more uniform products (e.g., gasoline).

3.5 Proposed BACT Limits and Control Option

Based on the analysis presented above, Tesoro-Savage proposes that BACT for reducing VOC and TAP emissions from the proposed marine vessel loading operations is the use of an MVCU system, designed and operated to achieve maximum destruction of VOCs and TAPs.

4 MARINE VAPOR COMBUSTION UNIT BACT ANALYSIS

Vapors displaced from vessels as they are filled with crude oil will consist primarily of hydrocarbons. Assist-gas is added to the vapor as needed to ensure good combustion efficiency during certain times that the vessels are being loaded. All vapors, including any additional gas, will be collected and routed to a marine vapor combustor unit (MVCU) for safe disposal. Pollutant emissions from the MVCU are expected to include NO_X, PM (including PM_{10} and $PM_{2.5}$), CO, SO_2, VOCs, and TAPs.

4.1 Identify Commercially-Available Emission Reduction Alternatives

A broad review of permitted MVCUs, thermal oxidizers (TOs), and flares included in the federal RBLC database indicates that emission reduction alternatives are limited to:

- Good combustion practices
- Proper design and operation
- Use of gaseous fuels and/or pipeline natural gas

By combusting the displaced vapors using a MVCU, loading operations will comply with U.S. Coast Guard safety requirements in 33 CFR 154 Subpart E. Pollutant emissions from the MVCU fall into two categories: 1) vapors, typically VOCs, that escape the MVCU without being destroyed as intended; and 2) combustion products of the destroyed vapors and any supplemental fuel used to ensure sufficient flame temperature. Proper design and operation of the MVCU are intended to minimize the quantity of vapors that escape destruction.

In most cases, the VOC stream that an MVCU, TO, or flare controls is of variable composition and concentration. As a result, the associated burner must be designed to handle a wide range of combustion conditions, and cannot be optimized. In contrast, gas-fired burners associated with

boilers or process heaters can be designed to minimize specific pollutants, such as NO_X or CO. While NO_X emissions vary among MVCU, TO, and flare combustor designs, none can utilize a true "Low-NO_X burner" design similar to a boiler or process heater.

NO_X emissions associated with MVCU, TO, and flare designs are typically in the range of 20 to 40 ppmvd. BACT for current Low-NO_X burner designs associated with small (i.e., less than 100 MMBtu/hr) natural gas-fired boilers is typically in the range of 9 to 11 ppmvd. When a MVCU, TO, or flare manufacturer or vendor says their product incorporates a "Low-NO_X burner," the burner in question does not incorporate the same technology as a burner intended for use in a boiler, and will not achieve the same NO_X emission rate. For purposes of this BACT analysis, minimizing NO_X emissions while maintaining an acceptable destruction efficiency is considered part of "good combustion practices, and "Low-NO_X burner" is not considered an available technology for the proposed MVCU.

A permit issued to the Tidewater Terminal Co. for a facility in Pasco, Washington, on September 23, 2013 by Ecology's Eastern Regional Office, included BACT and tBACT (BACT for toxic air pollutants) determinations for an MVCU. The Tidewater Terminal Co. MVCU is described in the permit as a "98.6% efficient John Zink Company Marine Vapor Combustion System enclosed flare." Conditions placed on this unit by the permit are:

- Propane is used to fuel the pilot and as an auxiliary fuel to maintain combustion,
- Combustion temperature must be maintained at 1,400°F,
- VOC emissions from the unit shall not exceed 7 milligrams per liter of gasoline (mg/L) transferred from the facility to barges, and
- No visible emissions except water vapor are allowed from the unit.

4.2 Eliminate Technically Infeasible Alternatives

Because no pollutant-specific emission reduction alternatives were identified, all pollutants will be considered together in this and the following sections.

The emission reduction alternatives identified in the previous section are all considered technically feasible for MVCUs.

4.3 Ranking of Remaining Alternatives

Good combustion practices, proper design and operation, and use of "clean fuels" (i.e., pipeline natural gas or propane) are all considered baseline controls for MVCUs; therefore, it is not possible to rank the remaining alternatives. However, the following is a comparison of the MVCU proposed for the Project to each of the BACT elements identified in the Tidewater Terminal permit.

The proposal that the Project's MVCU combust natural gas as an assist gas and for pilot flames compares favorably with the corresponding Tidewater Terminal MVCU permit requirement. Both natural gas and propane are considered "clean fuels" that minimize emissions of criteria, toxic, and greenhouse gas (GHG) emissions. Therefore, requiring the Project MVCU to employ natural gas is equivalent to the Tidewater Terminal requirement to employ propane.

The Project's MVCU will operate at a temperature that yields high destruction efficiency consistent with the aim of the Tidewater Facility MVCU combustion temperature. Optimal control temperature varies with unit design. At this time, we do not know the combustion

temperature prescribed by the Project's MVCU manufacturer to achieve the designed-for destruction efficiency. Maintaining the proper combustion temperature is a component of the "good combustion practices," and "proper design and operation" proposed as BACT for the Project's MVCU. When such information is available, it will be incorporated into the portion of the facility Operations and Maintenance Plan (O&M Plan) covering the MVCUs. Therefore, the Project MVCU will be operated consistent with the Tidewater Terminal MVCU.

The Project's MVCU will meet the 7 milligrams of VOC or less per liter of product loaded emission rate that is required for the Tidewater Facility. According to the manufacturer, the proposed Project MVCU system is expected to achieve at least 99.8 percent destruction of delivered hydrocarbons. In the Tidewater Terminal permit, the expected destruction efficiency is 98.6 percent. In this regard, the Project MVCU will perform consistent with the Tidewater Terminal MVCU.

The Project's MVCU will be designed to ensure that no visible emissions except for water vapor are emitted from the unit. Elimination of visible emissions other than water vapor is the result of using "good combustion practices" and "proper design and operation," which were both proposed in the permit application as BACT and tBACT for the Project MVCU. In this regard, the performance of the Project MVCU will be consistent with the Tidewater Terminal MVCU.

4.4 Consideration of Energy, Environmental and Cost Factors

Because Tesoro-Savage proposes to use the most effective alternatives, no evaluation of energy, environmental, or cost was conducted.

4.5 Proposed BACT Limits and Control Option

Tesoro-Savage proposes that BACT for reducing criteria pollutant and TAP emissions from the proposed MVCU is achieved by implementing good combustion practices, proper design and operation, and use of pipeline natural gas as an assist gas and for pilot flames.

5 CRUDE OIL STORAGE TANK BACT ANALYSIS

The proposed project will include an onsite tank farm, which will store crude oil delivered by railcar when a ship or barge is not available for loading. The tank farm will consist of up to six storage tanks, each approximately 240 feet in diameter, 48 feet tall, and with a maximum storage capacity of approximately 360,000 barrels. Two of the six tanks will be electrically heated, as needed, to control the viscosity of certain crude oil during loading and unloading.

Fugitive emissions are expected to occur due to evaporative loss of crude oil during storage and as a result of changes in the level of oil in the tanks. Pollutant emissions from the tanks are expected to include VOCs and TAPs. For purposes of this BACT analysis, a maximum annual throughput of 131.4 million barrels per year was assumed.

5.1 Identify Commercially-Available Emission Reduction Alternatives

Tanks constructed after July 23, 1984 are subject to the requirements of the NSPS for Volatile Organic Liquid Storage Vessels for Which Construction, Reconstruction, or Modification Commenced after July 23, 1984 (40 CFR Part 60 Subpart Kb). As stated in Section 1.3, EPA guidance indicates that a BACT determination can be no less stringent than the applicable NSPS

requirements. A review of NSPS Subpart Kb, permits issued to facilities with oil storage tanks, and permits included in the federal RBLC database indicates that emission reduction alternatives for crude oil storage tanks include:

- Fixed-roof tank operated under pressure
- Fixed-roof tank with an internal floating roof with primary and secondary seals, and a vapor collection system routed to a process or fuel gas system or a control device (e.g., thermal oxidizer or carbon adsorber assumed to be at least 95 percent effective at reducing VOCs)
- Fixed-roof tank with an internal floating roof with primary and secondary seals
- External floating roof tank with primary and secondary seals
- Fixed-roof tank with a vapor collection system routed to a process or fuel gas system or a control device (e.g., thermal oxidizer or carbon adsorber assumed to be at least 95 percent effective at reducing VOCs)
- Fixed-roof tank operated at atmospheric pressure

Some identified BACT determinations for crude oil storage tanks are summarized in Table 5-1.

Table 5-1. Summary of VOC BACT Determinations for Crude Oil Tanks

Facility	State	Date Permitted	Equipment	BACT
Enbridge Superior Terminal	WI	6/12/2014	3 crude oil tanks – 24.5 million gal ea.	External floating roof with primary and secondary seals
Holly Refinery	UT	11/18/2013	3 crude oil tanks – 67,155 bbl, 80,306 bbl, 106,811 bbl	Fixed roof, pending review of vapor pressure variation. If vapor pressure exceeds NSPS levels, internal floating roof with primary and secondary seals.
Plains Marketing – Cushing Terminal Crude Storage Facility	OK	10/12/2010	46 crude oil tanks – 31 x 270,000 bbl ea., 2 x 300,000 bbl ea., and 13 x 570,000 bbl ea.	External floating roof with primary and secondary seals.
Hyperion Energy Center	SD	8/20/2009	10 crude oil tanks – 21 million gal ea.	Internal floating roof for liquids with a true vapor pressure less than 0.3 psia; add capture system with thermal oxidizer for liquids with a true vapor pressure equal to or greater than 0.3 psia.
ConocoPhillips Wood River Refinery	IL	8/5/2008	2 crude oil tanks – 11 million gal ea.	Internal floating-roof tanks with primary and secondary seals to comply with 40 CFR 60 Subpart Kb & 40 CFR 63 Subpart CC

Facility	State	Date Permitted	Equipment	BACT
Marathon Petroleum Garyville Refinery	LA	9/23/2006	12 crude oil tanks – 21 million gal ea.	External floating-roof tanks that comply with 40 CFR 63 Subpart CC
Arizona Clean Fuels Yuma	AZ	9/15/2006	7 crude oil tanks - 7,560,000 gal ea.	Internal floating-roof tanks with closed-vent system routed to thermal oxidizer.
Valero Refining - St. Charles Refinery	LA	2/5/2005	51 heavy materials tanks - 2,100 to 425,000 bbl ea.	Fixed-roof tanks, comply with 40 CFR 63 Subpart CC.

5.2 Eliminate Technically Infeasible Alternatives

While some petroleum products (i.e., those that are gases at atmospheric pressure) are stored in pressure vessels, crude oil is not. Therefore, a fixed-roof tank operated under pressure is considered technically infeasible, and is removed from further consideration. The facility will not include a process or fuel gas system, therefore, a closed vent system could not be routed to such a system, and that alternative is removed from consideration.

A fixed-roof tank operated at atmospheric pressure is technically feasible; but, because NSPS Subpart Kb does not include fixed-roof tank designs as an option and BACT can be no less stringent than the applicable NSPS, such a design cannot be considered as BACT.

All other emission reduction alternatives identified in the previous section are considered technically feasible for controlling emissions from oil storage tanks.

5.3 Ranking of Remaining Alternatives

The least effective control is a tank with a fixed roof operated at atmospheric pressure. Using the EPA's TANKS 4.0.9d emission calculation program, the total annual VOC emissions from the tanks, assuming a fixed-roof tank design is used, would be approximately 793 tons per year (tpy). As discussed in the previous section, a fixed-roof tank design operated at atmospheric pressure cannot be considered in the BACT analysis because the requirements of NSPS Subpart Kb are more stringent. Nevertheless, a fixed-roof design is an emission baseline worth noting. When ranking the VOC emission reduction alternatives as presented below, the percent reduction relative to the BACT baseline (the least effective alternative that complies with NSPS Subpart Kb), as well as the percent reduction relative to a fixed-roof design operated at atmospheric pressure, are both provided along with the total VOC emissions associated with each alternative.

In top-down order of decreasing stringency, the feasible VOC control alternatives are as follows:

- Fixed-roof tank with an internal floating roof with primary and secondary seals and vapor collection system routed to a control device (e.g., thermal oxidizer or carbon adsorber system assumed to be at least 95 percent effective at reducing VOCs) – 95.27 percent

incremental reduction compared to BACT baseline, 99.76 percent reduction compared to fixed-roof design at atmospheric pressure (1.9 tpy);

- Fixed-roof tank with an internal floating roof with primary and secondary seals – 90.55 percent incremental reduction compared to BACT baseline, 99.53 percent reduction compared to fixed-roof design at atmospheric pressure (3.7 tpy);
- External floating roof tank with primary and secondary seals – 90.00 percent incremental reduction compared to BACT baseline, 99.50 percent reduction compared to fixed-roof design at atmospheric pressure (4.0 tpy); and
- Fixed-roof tank with a vapor collection system routed to a control device (e.g., thermal oxidizer or carbon adsorber system assumed to be at least 99.5 percent effective at reducing VOCs) – BACT baseline, 95.00 percent reduction compared to fixed-roof design at atmospheric pressure (39.6 tpy).

The emission reductions presented above were calculated using USEPA's TANKS 4.0.9d program.

5.4 Consideration of Energy, Environmental and Cost Factors

The most stringent alternative is a fixed-roof tank with an internal floating roof with primary and secondary seals and vapor collection system routed to a control device (e.g., thermal oxidizer or carbon adsorber system assumed to be at least 95 percent effective at reducing VOCs). Based on review of the RBLC and other issued permits, it appears that this alternative has been determined to be BACT for a single permitted facility, Arizona Clean Fuels Yuma, which was first permitted in April 2005, and then again in September 2006. The facility has never been constructed. This combination of control alternatives (i.e., internal floating roof with vapor collection system) has been considered is several BACT analyses, but, outside of the Arizona Clean Fuels Yuma project, never identified as BACT for crude oil storage tanks.

There are several instances of fixed-roof tanks equipped with a vapor collection system routed to a control device employed as LAER for reducing VOC emissions from crude oil storage tanks in ozone nonattainment areas. The primary difference between BACT and LAER is that, while BACT takes the economic impact of an emission reduction alternative into account, cost is not considered when determining LAER. A fixed-roof tank with vapor collection and control system was considered for the Cushing Terminal Crude Oil Storage Facility in Oklahoma, and the cost-effectiveness was determined to be over $39,000 per ton of VOC reduced.[8]

The Hyperion Energy Center project in South Dakota considered applying a capture and thermal oxidizer system to between 59 and 89 tanks, 10 of which would contain crude oil; the calculated cost-effectiveness ranged between $12,000 and $22,000, depending upon the scenario. Because many more tanks containing substances more volatile than crude oil were involved in this analysis, it is not considered a good cost-effectiveness example for the proposed TSVEDT crude oil tanks. The Hyperion Energy Center project has not been constructed, and the permit has expired.

[8] http://www.deq.state.ok.us/aqdnew/permitting/permissue/2003104-c4p.pdf

In June 2014, Enbridge Energy received a permit that included the construction and operation of three 24.5-million-gallon (584,232 bbl) crude oil storage tanks. The Wisconsin Department of Natural Resources (WDNR) deemed BACT for VOC emissions from the tanks to be an external floating roof with primary and secondary seals. The cost-effectiveness analysis submitted to WDNR indicated that an internal floating roof tank with a capture system controlled by a carbon adsorption system had an incremental cost-effectiveness of $16,334 per ton of VOC reduced. All capture system and control device combinations were rejected as economically infeasible.[9]

In light of these facts, the use of a vapor collection system routed to a control device to control VOC emissions from the proposed tanks is removed from consideration. Almost all recently constructed crude oil tanks in Washington use an internal floating roof with primary and secondary seals to control VOC emissions.

5.5 Proposed BACT Limits and Control Option

Tesoro-Savage proposes that BACT for VOC and TAP emissions from the proposed crude oil storage tanks is the use of properly designed and operated internal floating-roof tanks with primary and secondary seals. Tesoro-Savage believes that emission rate limits are not appropriate for a fugitive source, and, therefore, does not propose any such limits as BACT.

6 COMPONENT LOSSES BACT ANALYSIS

The Facility will include piping, valves, connectors, pumps, and other components to transfer crude oil from railcars to tanks, and from tanks to vessels. All components are subject to minute vapor leakage, and fugitive VOC and TAP emissions are expected to occur when components are in service.

6.1 Identify Commercially-Available Emission Reduction Alternatives

A broad review of permitted operations included in the federal RBLC database and other permitted sources indicates that fugitive emissions from leaking petroleum service components are reduced through a combination of proper equipment selection and a leak detection and repair (LDAR) program. Identified alternatives include:

- Use of components using leakless technology
- Implementation of an LDAR program

LDAR programs involve periodic monitoring of components with a hydrocarbon analyzer, identification of components that leak above the leak definition levels specified in the equipment leak standard, and subsequent repair of the leaking components. LDAR programs are frequently defined by regulations; those in the RBLC deemed to represent BACT for other facilities permitted in the past ten years include:

- 40 CFR 63 Subpart H (National Emission Standards for Organic Hazardous Air Pollutants for Equipment Leaks)

[9] http://dnr.wi.gov/cias/am/amexternal/AM_PermitTracking2.aspx?id=3002436

- 40 CFR 63 Subpart CC (National Emission Standards for Hazardous Air Pollutants From Petroleum Refineries)
- 40 CFR 63 Subpart UU (National Emission Standards for Equipment Leaks—Control Level 2 Standards)
- 40 CFR 60 Subpart VVa (Standards of Performance for Equipment Leaks of VOC in the Synthetic Organic Chemicals Manufacturing Industry for Which Construction, Reconstruction, or Modification Commenced After November 7, 2006)
- 40 CFR 60 Subpart GGGa (Standards of Performance for Equipment Leaks of VOC in Petroleum Refineries for Which Construction, Reconstruction, or Modification Commenced After November 7, 2006)
- 40 CFR 61 Subpart V (National Emission Standard for Equipment Leaks (Fugitive Emission Sources))
- Louisiana Refinery MACT (Louisiana Administrative Code §2121, §2122, and Chapter 51)

The RBLC findings are summarized in Table 6-1.

Table 6-1. Summary of BACT Determinations for Component Losses from the RBLC

Facility	State	Date Permitted	BACT Determination
Valero Refining - St. Charles Refinery	Louisiana	11/17/2009	LA Refinery MACT, 40 CFR 63 Subpart H, 40 CFR 61 Subpart V
Sunoco Toledo Refinery	Ohio	2/23/2009	40 CFR 63 Subpart CC, 40 CFR 60 Subparts VV & GGG
Marathon Petroleum Garyville Refinery	Louisiana	12/27/2006	40 CFR 63 Subpart CC, 40 CFR 60 Subpart GGG, LA Refinery MACT
ConocoPhillips Wood River Refinery	Illinois	8/5/2008	40 CFR 63 Subpart H
Arizona Clean Fuels Yuma	Arizona	4/14/2005	40 CFR 63 Subpart H[1]

[1] In addition, the following leak definitions have been included: 100 ppmv for valves and connectors in gas/vapor and light liquid service and 500 ppmv for all other components. All pumps must be equipped with a shaft sealing system that prevents or detects emissions of VOC from the seal. All compressors must be equipped with a seal system that includes a barrier fluid system that prevents leakage of process fluid to the atmosphere. Other requirements exist for other connector types and valves. The percent of leaking components cannot exceed the following: 1.0% for pumps in light liquid service and compressors on a source-wide basis, 1.0% for the total number of pressure relief devices on a source-wide basis, 0.3% for total number of connectors in gas/vapor service and connectors in light liquid service on a source-wide basis, 0.3% of the total number of valves in gas/vapor service and valves in light liquid service on a source-wide basis, and not more than 0.025% of valves in gas/vapor service and valves in light liquid service shall be leaking with a concentration in excess of 10,000 ppmv.

6.2 Eliminate Technically Infeasible Alternatives

Proper equipment selection and implementing an LDAR program based on any of the regulations identified in the previous section are considered technically feasible for reducing fugitive VOC and TAP emissions from component leaks.

6.3 Ranking of Remaining Alternatives

There are many LDAR programs available, some codified in regulations (e.g., NSPS, NESHAP, etc.), some developed by state agencies for consent decrees, and others developed by industry groups. Some of the non-regulatory alternatives include:

- Remote sensing technology
- Enhanced LDAR standards
- Audio/visual/olfactory methods

The effectiveness of these alternative programs has not been quantified, but none is thought to be any more effective than a regulatory LDAR program that includes implementation of EPA Method 21 (Determination of Volatile Organic Compound Leaks). All of the regulations identified in the previous section that require implementation of a formal LDAR program include Method 21.

A comparison of fugitive component emissions regulations compiled by the Louisiana Department of Environmental Quality (LDEQ) is provided in Table A-2. Taken as a whole, the requirements of 40 CFR 63 Subpart H are the most stringent. Implementation of an LDAR program and proper equipment selection are considered baseline alternatives, so there is no ranking.

6.4 Consideration of Energy, Environmental and Cost Factors

Because Tesoro-Savage proposes to use the most effective alternatives, no evaluation of energy, environmental, or cost was conducted.

6.5 Proposed BACT Limits and Control Option

Tesoro-Savage proposes that implementation of an LDAR program that meets the requirements of 40 CFR 63 Subpart H represents BACT for VOC and TAP component leaks at the Facility. Tesoro-Savage believes that emission rate limits are not appropriate for a fugitive source, and, therefore, does not propose any such limits as BACT. It should be noted that the proposed facility is not subject to the requirements of Subpart H as a result of the regulatory applicability criteria, but would meet the requirements of the rule, as appropriate, because it represents the most stringent implementation of an LDAR program.

7 EMERGENCY ENGINE BACT ANALYSIS

7.1 Process Description

Three pumps powered by nominal 225 hp diesel engines will be installed to provide water for fire suppression. Other than plant emergency situations, the engine will be operated a maximum of 34 hours per year for routine testing, maintenance, and inspection purposes.

The fire pump engines will emit criteria pollutants and TAPs associated with diesel engines. Although the engine make and model have not yet been specified, the engines will comply with the emission standards for stationary fire pump engines in 40 CFR Part 60 Subpart IIII (Stationary Compression Ignition Reciprocating Engine NSPS).

7.2 NO_X BACT

7.2.1 Available Control Technologies and Technical Feasibility

There are a limited number of technically-feasible NO_X control technologies that are commercially available for internal combustion engines. Two general types of control options have emerged as technically feasible: combustion process modifications, and post combustion

controls. In practice, the high temperature and relatively low volumetric flow of the engine exhaust eliminates post-combustion controls from consideration. Table A-3 summarizes recent BACT determinations for internal combustion engines.

7.2.1.1 Combustion Process Modifications

This option is incorporated in the engine design. Typical design features include electronic fuel/air ratio and timing controllers, pre-chamber ignition, intercoolers, and lean-burn fuel mix. Currently available new engines include these features as standard equipment; accordingly this measure is deemed the baseline case for purposes of the BACT analysis.

7.2.1.2 Selective Catalytic Reduction (SCR)

In this technology, nitrogen oxides are reduced to gaseous nitrogen by reaction with ammonia in the presence of a supported precious metal catalyst. The SCR system includes a catalyst module downstream of the engine exhaust. Just upstream of the catalyst, a reagent liquid (typically ammonia or urea solution) is injected directly into the exhaust stream. The method is considered feasible with lean-burn internal combustion engines.

7.2.1.3 Non-Selective Catalytic Reduction (NSCR)

Similar to automobile catalytic converters, this method employs noble metal catalysts to oxidize nitrogen oxides to molecular nitrogen. It operates in regimes with less than four percent oxygen in the exhaust, which corresponds to fuel-rich operation. The method is not feasible with lean-burn internal combustion engines.

7.2.2 Energy and Environmental Considerations

Several factors distinguish the two technically-feasible options with regard to energy and environmental impacts. One drawback associated with SCR systems is the environmental risk of handling and using ammonia reagent solutions. Most SCR catalyst modules can operate well without excess reagent. However, this requires particular attention to the controlled injection of the reagent in response to changes in load, temperature, and other parameters. Absent an emergency situation, the proposed fire pump engines will only operate infrequently for brief testing and maintenance checks (Subpart IIII limits these checks to 100 hours per year). These short, transient operating periods significantly reduce the effectiveness of the post-combustion controls.

Further, it should be assumed that ammonia emissions associated with SCR operation will occur under some or all operating conditions. This represents an additional air pollutant that is not emitted when SCR is not used for these engines. Also, the handling and storage of substantial volumes of the required ammonia or urea reagent solutions can pose an additional safety risk to facility personnel, and the risk of environmental harm in the event of an accidental release.

The SCR catalyst requires periodic cleaning due to fouling of the surfaces due to the presence of trace contaminants, such as sulfur compounds, particulate, and organic species. This requirement generates a secondary waste stream of contaminated cleaning solutions that must be disposed as hazardous waste.

When SCR or any add-on emission control technology is used, additional auxiliary equipment such as pumps and motors must be added. Also, the presence of the catalyst module adds an

increment of pressure drop to the exhaust train. To avoid a substantial drop-off in engine performance, the SCR modules must be designed to minimize the increase in back pressure. However, the energy requirements of auxiliary equipment and even minor back-pressure increases reduce the net energy efficiency of the plant. In contrast, the implementation of combustion process controls does not require an add-on system with increased energy use by auxiliary equipment, or the use of catalyst and ammonia materials. There is some additional complexity in the engine controls for this option. Proper engine tuning and fuel/air ratio is needed across the full load range to achieve reduced emissions while avoiding a reduction in engine efficiency. The automatic fuel/air ratio controller helps accomplish this objective.

7.2.3 Ranking of Control Options

With regard to NO_X emission abatement, the ranking of the technically-feasible options is straightforward. The use of SCR offers the highest potential level of control for the proposed diesel-fired emergency engines. Up to 90 percent reduction in NO_X mass emission at all load levels is claimed for typical internal combustion engines.

The option offering the next highest control level is combustion process modifications, as would be implemented as standard equipment (i.e. no additional cost) in the selected engines. Advanced combustion design allows the engines to operate at rated horsepower, while burning an optimized fuel mix. This feature includes ignition timing retard to reduce cylinder temperatures for lean mixtures. The controls are also designed to optimize the air/fuel ratio and ignition timing in response to actual operating conditions.

7.2.4 Economic Analysis for Controls

Since advanced NO_X controls is a standard feature of the currently available new engines, the emissions reported by vendors for this package are taken as the base case in this BACT analysis. Addition of SCR is then analyzed as the next incremental control technology, in terms of both control level and cost.

The annualized operating costs for addition of SCR to the fire water pump engine would be about $44,000 per year. The estimated total capital investment is almost $127,000, based on purchased equipment cost estimates. Capital recovery is the single largest annual expense, based on 7 percent prevailing interest rate, and 10-year service period. Additional maintenance charges are also encountered for operation of the systems and annual catalyst cleaning. This investment would provide about 0.11 tons of NO_X reduction per year, assuming 90 percent emission control efficiency. Cost-effectiveness is more than $385,000 per ton, which represents a prohibitively high cost for this BACT option (see attached calculations).

7.2.5 Proposed BACT

A cost-effectiveness analysis has shown that use of SCR is cost prohibitive as a more-stringent control for the proposed fire water pump engines. The proposed BACT for these engines is the suite of combustion modifications supplied as standard equipment with the candidate types of engines which enable the manufacturer to certify the engine under Subpart IIII. As required by Subpart IIII, non-emergency hours of operation would be limited to 34 hours per year.

7.3 CO and VOC BACT

As for NO_X, CO and VOC emissions for the proposed fire water pump engines would be certified by the manufacturer to achieve the applicable standards in Subpart IIII, and would be operated no more than 34 hours per year in a non-emergency mode, which is less than the 100-hour limit imposed by Subpart IIII.

7.3.1 Technically-Feasible Controls

For CO emissions, the commercially available control means for IC engines are:

Combustion Process Modifications - This option is implemented in the design of the internal combustion engine. Typical design features include an electronic fuel/air ratio control and ignition retard, turbocharging, intercoolers, and lean-burn fuel mix. Currently available engines include these features as standard equipment, so these measures are used as the base case for the BACT cost-effectiveness analysis.

Catalytic Oxidation – This control technology employs a module containing an oxidation catalyst that is located in the exhaust path of the engines. In the catalyst module, CO and VOCs diffuse through the surfaces of a ceramic honeycomb structure coated with noble metal catalyst particles. Oxidation reactions on the catalyst surface forms carbon dioxide and water. Typical vendor indications are that 95 percent reduction in CO and 50 percent reduction in VOC emissions should be achieved.

7.3.2 Cost-Effectiveness Analysis

Given the low number of routine operating hours per year, the cost of catalytic oxidation for CO and VOC control will be prohibitive. The estimated annualized cost to add catalytic oxidation to the fire water pump engines is approximately $30,300. This investment would reduce CO and VOC emissions by 0.013 and 0.0017 tons per year, respectively, assuming a 95 percent reduction in emissions and 34 hours per year of non-emergency operation. Cost-effectiveness for this equipment would be more than $2,100,000 per ton of CO and VOC abated for the fire pump engines, which represents a prohibitively high cost for this BACT option.

7.3.3 Proposed BACT

Based on the cost-effectiveness analysis for application of catalytic oxidation as a more-stringent increment of control, the proposed BACT for the fire pump engines is the suite of combustion modifications supplied by the manufacturer as standard equipment that enable the engine to meet the emission standards in Subpart IIII. Annual emissions would be limited by restricting non-emergency hours of operation to 100 hours per year as required by Subpart IIII.

7.4 SO_2 and PM BACT

The proposed fire pump engines will use ultra-low sulfur diesel (ULSD) fuel which has a sulfur content of no more than 0.0015 percent (15 ppm) by weight. Given the low emission rates expected as a result of using ULSD fuel, there are no available technologies beyond good combustion controls that are considered to provide feasible or cost-effective emission control. Use of engines certified by manufacturers to meet Subpart IIII emission standards, use of ULSD fuel, and limitation of non-emergency operation to a maximum of 34 hours per year (less than

the 100-hour limit imposed by Subpart IIII) will provide low emissions of SO_2 and PM, and are proposed as BACT measures for these pollutants.

8 TAPS BACT

The majority of TAPs emitted by the proposed emission units can be classified as either volatile organic compounds (i.e., VOCs) or particles (i.e., PM). The proposed BACT for VOC and PM are also proposed to be BACT for VOC TAPs and PM TAPs, respectively. BACT for TAPs that contain chlorine (e.g., hydrogen chloride) and sulfur (e.g., sulfuric acid) is proposed to be the same as that proposed for SO_2, and BACT for nitrogen-containing TAPs (e.g., NO_2) is proposed to be the same as that proposed for NO_X.

Table A-1. Recent RBLC Entries for Natural Gas-Fired Boilers Less Than 100 MMBtu/hr

Permit or RBLC ID	Permit Issuance Date	Company	Location	System Description	Maximum Production Rate	Limit(s)	Control Option	Basis
FL-0335	09-05-12	Klauser Holding USA, Inc.	Suwannee County, FL	Boiler	46 MMBtu/hr	NO_X – 0.036 lb/MMBtu CO – 0.039 lb/MMBtu $PM_{10}/PM_{2.5}$ – 2 gr of s/100 scf SO_2 – 2 gr of s/100 scf VOC – 0.003 lb/MMBtu	LNB, FGR, GCP	BACT-PSD, Other Case-by-Case
NJ-0079	07-25-12	CPV Shore, LLC	Middlesex, NJ	Boiler	91.6 MMBtu/hr	NO_X – 0.01 lb/MMBtu CO – 0.038 lb/MMBtu $PM_{10}/PM_{2.5}$ – 0.005 lb/MMBtu SO_2 – 0.0018 lb/MMBtu VOC – 0.0015 lb/MMBtu	LSF, LNB, GCP	LAER, Other Case-by-Case, BACT-PSD
OH-0350	07-18-12	Republic Steel	Lorain, OH	Boiler	65 MMBtu/hr	NO_X – 0.07 lb/MMBtu CO – 0.04 lb/MMBtu PM_{10} – 0.0074 lb/MMBtu SO_2 – 0.0006 lb/MMBtu VOC – 0.0054 lb/MMBtu	GCP	BACT-PSD
CA-1189	01-24-12	Petrorock – Tunnell Lease	Santa Barbara, CA	Boiler	2 MMBtu/hr	NO_X – 20 ppmvd @ 3% O_2	LNB	Other Case-by-Case
CA-1192	06-21-11	Avenal Power Center, LLC	Kings, CA	Auxiliary Boilers	37.4 MMBtu/hr	NO_X – 9 ppmvd CO – 50 ppmvd PM_{10} – 0.0034 gr/dscf	ULNB, LSF, Operational Restriction of 46,675 MMBtu/yr	BACT-PSD
CA-1185	06-07-11	Santa Barbara Airport	Santa Barbara, CA	Boiler	3 MMBtu/hr	NO_X – 12 ppmvd @ 3% O_2 CO – 100 ppmvd @ 3% O_2	GCP, FGR	Other Case-by-Case

Permit or RBLC ID	Permit Issuance Date	Company	Location	System Description	Maximum Production Rate	Limit(s)	Control Option	Basis
LA-0246	12-31-10	Valero Refining – New Orleans, LLC	St. Charles, LA	Boiler	99 MMBtu/hr	NO_X – 0.04 lb/MMBtu CO – 0.082 lb/MMBtu PM_{10} – 0.0075 lb/MMBtu SO_2 – 0.026 lb/MMBtu VOC – 0.0054 lb/MMBtu	GCP	BACT-PSD
OR-0048	12-29-10	Portland General Electric	Morrow, OR	Boiler	91 MMBtu/hr	NO_X – 0.05 lb/MMBtu PM_{10} – 2.5 lb/MMcf	LNB, CF	BACT-PSD
MO-0082	10-05-10	Archer Daniels Midland	Audrain County, MO	Boiler	85.6 MMBtu/hr	VOC – 0.0055 lb/MMBtu	GCP	BACT-PSD
LA-0240	06-14-10	Flopam, Inc.	Iberville Parish, LA	Boiler	25.1 MMBtu/hr	NO_X – 9 ppmv CO – 0.037 lb/MMBtu PM_{10} – 0.005 lb/MMBtu VOC – 0.008 lb/MMBtu	ULNB, LSF, GCP	LAER (NO_X, VOC), BACT-PSD
CA-1191	03-11-10	City of Victorville	Victorville, CA	Auxiliary Boilers	35 MMBtu/hr	NO_X – 9 ppmvd CO – 50 ppmvd $PM_{2.5}$ – 0.2 gr/100 dscf	Restricted Hours of Operation (500), LSF	BACT-PSD
NV-0049	08-20-09	Harrah's Operating Company, Inc.	Clark County, NV	Boilers	14.3, 16.8, 24, 31.4, 33.5, and 35.4 MMBtu/hr	NO_X – 0.0353, 0.03, 0.0108, 0.0306, 0.0367, and 0.035 lb/MMBtu CO – 0.0705, 0.0173, 0.037, 0.0172, 0.0075, and 0.0073 lb/MMBtu PM_{10} – 0.0075, 0.0077, 0.0075, 0.0076, 0.0075, and 0.0076 lb/MMBtu SO_2 – 0.0006, 0.0042, 0.0006, 0.0006, 0.0006, and 0.0006 lb/MMBtu VOC – 0.0054 lb/MMBtu	LNB, FGR, LSF, GCP	BACT-PSD (NO_X, SO_2), Other Case-by-Case
NH-0015	02-27-09	Concord Steam Corp.	Merrimack County, NH	Auxiliary Boiler	76.8 MMBtu/hr	NO_X – 0.049 lb/MMBtu	LNB, FGR, Restricted Hours of Operation (700)	LAER

Permit or RBLC ID	Permit Issuance Date	Company	Location	System Description	Maximum Production Rate	Limit(s)	Control Option	Basis
OK-0135	02-23-09	Pryor Plant Chemical Co.	Mayes County, OK	Boilers	80 MMBtu/hr	NO_X – 0.05 lb/MMBtu CO – 0.0825 lb/MMBtu PM_{10} – 0.00625 lb/MMBtu SO_2 – 0.0025 lb/MMBtu VOC 0.00625 lb/MMBtu	LNB, GCP	BACT - PSD
OK-0137	02-09-09	ConocoPhillips	Kay County, OK	Boilers	95 MMBtu/hr	NO_X – 0.036 lb/MMBtu CO – 0.04 lb/MMBtu	ULNB, GCP	BACT-PSD
OK-0129	01-23-09	AEC, Inc.	Mayes County, OK	Auxiliary Boiler	33.5 MMBtu/hr	NO_X – 0.07 lb/MMBtu CO – 0.15 lb/MMBtu SO_2 – 0.0009 lb/MMBtu VOC – 0.016 lb/MMBtu	LNB, LSF, GCP	BACT-PSD
MD-0040	11-12-08	Competitive Power Ventures, Inc.	Charles County, MD	Boiler	93 MMBtu/hr	NO_X – 0.011 lb/MMBtu CO – 0.02 lb/MMBtu $PM_{10}/PM_{2.5}$ – 0.005 lb/MMBtu VOC – 0.002 lb/MMBtu	LNB, FGR, LSF	LAER ($PM_{2.5}$, VOC), BACT-PSD
OH-0323	06-05-08	Titan Tire Corp.	Williams County, OH	Boiler	50.4 MMBtu/hr	NO_X – 0.049 lb/MMBtu CO – 0.082 lb/MMBtu PM_{10} – 0.0019 lb/MMBtu VOC – 0.0054 lb/MMBtu	None	BACT-PSD (NO_X, CO, VOC)
NV-0047	02-26-08	Nellis AFB	Clark County, NV	Boilers	6.5 MMBtu/hr (representative of 125 regulated units)	NO_X – 25 ppmvd @ 3% O_2 CO – 50 ppmvd @ 3% O_2 PM_{10} – 0.0077 lb/MMBtu SO_2 – 0.0015 lb/MMBtu VOC – 0.0062 lb/MMBtu	LNB, FGR, LSF	BACT-PSD (SO_2), Other Case-by-Case
MD-0037	01-28-08	Medimmune, Inc.	Frederick County, MD	Boilers/Heaters	29.4 MMBtu/hr	NO_X – 0.011 lb/MMBtu	ULNB	LAER
MN-0070	09-07-07	Minnesota Steel Industries, Inc.	Itasca County, MN	Boilers/Heaters	99 MMBtu/hr	NO_X – 0.0035 lb/MMBtu CO – 0.08 lb/MMBtu PM_{10} – 0.0025 gr/dscf	None	BACT-PSD

Permit or RBLC ID	Permit Issuance Date	Company	Location	System Description	Maximum Production Rate	Limit(s)	Control Option	Basis
AL-0230	08-17-07	Thyssen-Krupp Steel and Stainless USA, LLC	Mobile County, AL	Boilers	64.9 MMBtu/hr	NO_X – 0.035 lb/MMBtu CO – 0.04 lb/MMBtu PM_{10} – 0.0076 lb/MMBtu SO_2 – 0.0006 lb/MMBtu VOC -0.0055 lb/MMBtu	ULNB, FGR	BACT-PSD
GA-0130	07-27-07	Kia Motors	Troup County, GA	Boilers	30 MMBtu/hr	NO_X – 30 ppm @ 3% O_2	LNB	BACT-PSD
AL-0231	06-12-07	Nucor Corp.	Morgan County, AL	Boiler	95 MMBtu/hr	NO_X – 0.035 lb/MMBtu CO – 0.061 lb/MMBtu PM_{10} – 0.0076 lb/MMBtu SO_2 – 0.0006 lb/MMBtu VOC -0.0026 lb/MMBtu	ULNB	BACT-PSD
OH-0309	05-03-07	Daimler Chrysler Corp.	Lucas County, OH	Boiler	20.4 MMBtu/hr	NO_X – 0.035 lb/MMBtu CO – 0.083 lb/MMBtu PM_{10} – 0.0075 lb/MMBtu SO_2 – 0.0006 lb/MMBtu VOC -0.0054 lb/MMBtu	LNB, FGR	LAER (NO_X, VOC), BACT-PSD
MS-0085	01-31-07	Dart Container Corp., LLC	Clarke County, MS	Boiler	33.5 MMBtu/hr	VOC – 0.0055 lb/MMBtu	None	BACT-PSD
FL-0285	01-26-07	Progress Energy Florida (PEF)	Pinellas County, FL	Auxiliary Boiler	99 MMBtu/hr	CO – 0.08 lb/MMBtu	LSF	BACT-PSD
FL-0286	01-10-07	Florida Power And Light Company	West Palm Beach County, FL	Auxiliary Boiler	99.8 MMBtu/hr	NO_X – 0.05 lb/MMBtu CO – 0.08 lb/MMBtu PM_{10}/SO_2 – 2 gr/100 scf	LSF	BACT-PSD
NV-0044	01-04-07	Harrah's Operating Company, Inc.	Clark County, NV	Boilers	35.4 MMBtu/hr	NO_X – 0.035 lb/MMBtu CO – 0.036 lb/MMBtu PM_{10} – 0.0075 lb/MMBtu SO_2 – 0.001 lb/MMBtu VOC -0.005 lb/MMBtu	LNB, FGR, LSF, GCP	BACT-PSD

Permit or RBLC ID	Permit Issuance Date	Company	Location	System Description	Maximum Production Rate	Limit(s)	Control Option	Basis
TX-0501	07-11-06	Texstar FS, LP	Henderson County, TX	Boiler	93 MMBtu/hr	NO_X – 0.090 lb/MMBtu CO – 0.076 lb/MMBtu PM_{10} – 0.0069 lb/MMBtu SO_2 – 0.00054 lb/MMBtu VOC -0.0049 lb/MMBtu	None	BACT-PSD
WA-0316	06-14-06	Northwest Pipeline Co.	Skagit County, WA	Boiler	4.19 MMBtu/hr	NO_X – 0.04 lb/MMBtu	GCP	BACT-PSD
CA-1128	05-16-06	Cottage Health Care	Santa Barbara County, CA	Boiler	25 MMBtu/hr	NO_X – 9 ppmv @ 3% O_2 CO – 50 ppmv @ 3% O_2	ULNB	BACT-PSD
NV-0048	05-16-06	Kern River Gas Transmission Co.	Clark County, NV	Boiler	3.85 MMBtu/hr	NO_X – 0.1 lb/MMBtu CO – 0.083 lb/MMBtu PM_{10} – 0.0078 lb/MMBtu SO_2 – 0.0015 lb/MMBtu VOC -0.005 lb/MMBtu	LSF, GCP	BACT-PSD (SO_2), Other Case-by-Case
NY-0095	05-10-06	Caithness Bellport, LLC	Suffolk County, NY	Auxiliary Boiler	29.4 MMBtu/hr	NO_X – 0.011 lb/MMBtu CO – 0.036 lb/MMBtu PM_{10} – 0.0033 lb/MMBtu SO_2 – 0.0005 lb/MMBtu	LNB, FGR, LSF, GCP	BACT-PSD
AR-0090	04-03-06	Nucor Steel	Mississippi, AR	Boilers	12.6 MMBtu/hr	NO_X – 0.075 lb/MMBtu CO – 0.084 lb/MMBtu PM_{10} - SO_2 - VOC -	LNB, GCP	BACT-PSD (except SO_2)
CA-1127	09-27-05	Genentech, Inc.	San Mateo County, CA	Boiler	97 MMBtu/hr	NO_X - CO -	ULNB	BACT-PSD
AK-0062	08-19-05	BP Exploration Alaska	North Slope Borough, AK	Reboiler	1.34 MMBtu/hr	NO_X - CO - SO_2 -	LSF, GCP	BACT-PSD

TABLE A-2. FUGITIVE EMISSIONS REGULATIONS COMPARISON TABLE

Item of Comparison	40 CFR 63 Subpart H - SOCMI HON MACT	40 CFR 63 Subpart UU – Equipment Leaks Control Level 2	40 CFR 63 Subpart U - Polymers and Resins I, Elastomer MACT	40 CFR 63 Subparts GGG and MMM – Pharmaceuticals MACT and Pesticide Active Ingredient MACT	LAC 33:III.Chapter 51-Louisiana Refinery MACT and Louisiana Non-HON MACT With NSR Consent Decree Enhancements	40 CFR 60 Subparts VVa (SOCMI) & GGGa (Refinery)	40 CFR 63 Subpart CC - Refinery MACT Modified HON Option	LAC 33:III Chapter 51-Louisiana Refinery MACT and Louisiana Non-HON MACT	LAC 33:III.2122 Louisiana Fugitive Emission Control for Nonattainment	40 CFR 61 Subparts F, J and V and 40 CFR 63 Subpart HH – PVC, Benzene, and Oil & Natural Gas Production MACT	40 CFR 60 Subparts VV (SOCMI), GGG (Refinery) & KKK (Gas Processing Plants)	40 CFR 63 Subpart TT – Equipment Leaks Control Level 1	RCRA 40 CFR 264 Subpart BB & 40 CFR 265 Subpart BB	LAC 33:III.2121 Louisiana Fugitive Emission Control and 40 CFR 63 Subpart III	40 CFR 63 Subparts R (Gasoline Distribution) and YY (Hydrogen Fluoride Production)
Stream Applicability	> 5% VHAP by weight In organic HAP service > 300 hrs	> 5% VHAP by weight or as defined in the referencing Subpart	Elastomer Product Process Units	> 5% VHAP by weight In organic HAP service > 300 hrs	5% wt of the sum of Class I and II organics TAPs or >10% wt of the sum of Class I, II and III organic TAPs	> 10% VOC by weight	> 5% VHAP by weight In organic HAP service > 300 hrs	5% wt of the sum of Class I and II organics TAPs or >10% wt of the sum of Class I, II and III organic TAPs	>10% VOC by weight For sources in non-attainment areas for ozone	>10% wt VTAP (vinyl chloride or benzene)	> 10% VOC by weight	> 5% VHAP by weight or as defined in the referencing Subpart	> 10% by weight	>10% VOC by volume (2121)	"In Gasoline Service" (R) or "In Hydrogen Fluoride Service", as defined
Leak Definition	**Valves-Gas/LL:** 500 **HL:** No visual/500 **Pumps-LL:** 1,000 **HL:** No visual/2,000 **Compressors:** 500 **CVS:** 500 **PRVs-Gas:** 500 **Liquid:** No visual/ 500 **Connectors:** 500 **Agitators:** 10,000 **Process Drains:** No visual leak **Sampling Points:** No visual leak	**Valves-Gas/LL:** 500 **HL:** No visual/500 **Pumps-LL:** 5,000 – polymers 2,000 – food/med 1,000 – other **HL:** 5,000 – polymers 2,000 – food/med 2,000 – other **Compressors:** 500 **CVS:** 500 **PRVs-Gas:** 500 **Liquid:** No visual/ 500 **Connectors:**500 **Agitators:** 10,000 **Process Drains:** No visual leak **Sampling Points:** No visual leak	**Valves-Gas/LL:** 500 **HL:** No visual/500 **Pumps-LL:** 1,000 **HL:** No visual/2,000 **Compressors:** 500 **CVS:** 500 **PRVs-Gas:**500 **Liquid:** 500 **Connectors:** 500 **Agitators:** No visual leak **Process Drains:** No visual leak **Sampling Points:** No visual leak	**Valves-Gas/LL:** 500 **HL:** No visual/500 **Pumps-LL:** No visual/2,000 **HL:** No visual/2,000 **Compressors:** 500 **CVS:** 500 **PRVs-Gas:**500 **Liquid:** No visual/ 500 **Connectors:** 500 **Agitators:** No visual/10,000 **Process Drains:** No visual leak **Sampling Points:** No visual leak	**Valves-Gas/LL:** 200 / 500 **HL:** No visual/1,000 **Pumps-LL:** 2,000 **HL:** No visual/2,000 **Compressors:** 5,000 **CVS:** 500 **PRVs-Gas:** 500 **Liquid:** No visual/ 1,000 **Connectors:** 1,000 **Agitators-HL:** 10,000 **Process Drains:** No visual leak **Sampling Points:** No visual leak	**Valves-Gas/LL:** 500 **HL:** No visual/10,000 **Pumps-LL:** 5,000 – monomer 2,000 – other **HL:** No visual/10,000 **Compressors:** Seal system failure **CVS:** 500 **PRVs-Gas:** 500 **Liquid:** No visual/ 10,000 **Connectors-Gas/ LL:** 500 **HL:** No visual/10,000 **Agitators:** No visual leak **Process Drains:** No visual leak **Sampling Points:** No visual leak	**Valves-Gas/LL:** 1,000 **HL:** No visual/1,000 **Pumps-LL:** 2,000 **HL:** Reciprocating pumps exempt **Compressors:** 500 **CVS:** 500 **PRVs-Gas:** 500 **Liquid:** No visual/ 500 **Connectors:** 1,000 **Agitators:** 10,000 **Process Drains:** No visual leak **Sampling Points:** No visual leak	**Valves-Gas/LL:** 1,000 **HL:** No visual/1,000 **Pumps-LL:** 2,000 **HL:** No visual/2,000 **Compressors:** 5,000 **CVS:** 500 **PRVs-Gas:** 500 **Liquid:** No visual/ 1,000 **Connectors:** 1,000 **Agitators-HL:** 10,000 **Process Drains:** No visual leak **Sampling Points:** No visual leak	**Valves-Gas/LL:** 1,000 **HL:** No visual/1,000 **Pumps-LL:** 5,000 **HL:** No visual/5,000 **Compressors:** 5,000 **CVS:** No visual **PRVs-Gas:** 1,000 **Liquid:** No visual/ 1,000 **Connectors:** No visual /1,000 **Agitators:** 10,000 **Process Drains:** 1,000 **Sampling Points:** No visual leak	**Valves-Gas/LL:** 10,000 **HL:** No visual /10,000 **Pumps-LL:** 10,000 **HL:** No visual /10,000 **Compressors:** No visual leak **CVS:** 500 **PRVs-Gas**:500 **Liquid**: 10,000 **(HH)All:** 10,000 **Connectors:** No visual leak **Agitators:** No visual leak **Process Drains:** No visual leak **Sampling Points:** No visual leak	**Valves-Gas/LL:** 10,000 **HL:** No visual/10,000 **Pumps-LL:** 10,000 **HL:** No visual/10,000 **Compressors:** Seal system failure **CVS:** 500 **PRVs-Gas:** 500 **Liquid:** No visual/ 10,000 **Connectors:** No visual/10,000 **Agitators:** No visual leak **Process Drains:** No visual leak **Sampling Points:** No visual leak	**Valves-Gas/LL:** 10,000 **HL:** No visual/10,000 **Pumps-LL:** 10,000 **Pumps-HL:** No visual/10,000 **Compressors:** Seal system failure **CVS:** 500 **PRVs-Gas:** 500 **Liquid:** No visual/ 10,000 **Connectors:** No visual/10,000 **Agitators:** No visual leak/10,000 **Process Drains:** No visual leak **Sampling Points:** No visual leak	**Valves-Gas/LL:** 10,000 **HL:** No visual/10,000 **Pumps-LL:** 10,000 **HL:** No visual/10,000 **Compressors:** 10,000 **CVS:** 10,000 **PRVs-Gas:** 10,000 **Liquid:** 10,000 **Connectors:** Visual **Agitators:** No visual leak **Process Drains:** No visual leak **Sampling Points:** No visual leak	**All equipment:** 10,000 Subpart III – annually or after reinstallation	**All equipment:** Evidence of potential leak detected by visual, audible, or olfactory means.
Leak Definition	**SurgeCtrlVessel:** No visual leak **Instrument Systems:** No visual/500 **Open-ended lines:** No visual leak	**SurgeCtrlVessel:** No visual leak **Instrument Systems:** No visual/500 **Open-ended lines:** No visual leak	**SurgeCtrlVessel:** No visual leak **Instrument Systems:** 500 **Open-ended lines:** No visual leak	**SurgeCtrlVessel:** No visual leak **Instrument Systems:** No visual/500 **Open-ended lines:** No visual leak	**SurgeCtrlVessel:** No visual leak **Instrument Systems:** No visual/1,000 **Open-ended lines:** 1,000	**SurgeCtrlVessel:** No visual leak **Instrument Systems:** No visual leak **Open-ended lines:** No visual leak	**SurgeCtrlVessel:** No visual leak **Instrument Systems:** No visual/1,000 **Open-ended lines:** No visual leak	**SurgeCtrlVessel:** No visual leak **Instrument Systems:** No visual/1,000 **Open-ended lines:** 1,000	**SurgeCtrlVessel:** No visual leak **Instrument Systems:** No visual leak **Open-ended lines:** No visual leak	**SurgeCtrlVessel:** No visual leak **Instrument Systems:** No visual leak **Open-ended lines:** No visual leak	**SurgeCtrlVessel:** No visual leak **Instrument Systems:** No visual leak **Open-ended lines:** No visual leak	**SurgeCtrlVessel:** No visual leak **Instrument Systems:** No visual leak **Open-ended lines:** No visual leak	**SurgeCtrlVessel:** No visual leak **Instrument Systems:** No visual leak **Open-ended lines:** No visual leak	**All equipment:** 10,000	

Item of Comparison	40 CFR 63 Subpart H - SOCMI HON MACT	40 CFR 63 Subpart UU – Equipment Leaks Control Level 2	40 CFR 63 Subpart U - Polymers and Resins I, Elastomer MACT	40 CFR 63 Subparts GGG and MMM – Pharmaceuticals MACT and Pesticide Active Ingredient MACT	LAC 33:III.Chapter 51-Louisiana Refinery MACT and Louisiana Non-HON MACT With NSR Consent Decree Enhancements	40 CFR 60 Subparts VVa (SOCMI) & GGGa (Refinery)	40 CFR 63 Subpart CC - Refinery MACT Modified HON Option	LAC 33:III Chapter 51-Louisiana Refinery MACT and Louisiana Non-HON MACT	LAC 33:III.2122 Louisiana Fugitive Emission Control for Nonattainment	40 CFR 61 Subparts F, J and V and 40 CFR 63 Subpart HH – PVC, Benzene, and Oil & Natural Gas Production MACT	40 CFR 60 Subparts VV (SOCMI), GGG (Refinery) & KKK (Gas Processing Plants)	40 CFR 63 Subpart TT – Equipment Leaks Control Level 1	RCRA 40 CFR 264 Subpart BB & 40 CFR 265 Subpart BB	LAC 33:III.2121 Louisiana Fugitive Emission Control and 40 CFR 63 Subpart III	40 CFR 63 Subparts R (Gasoline Distribution) and YY (Hydrogen Fluoride Production)
Monitoring Frequency: Light Liquid valves	Monthly if >2% leaking Quarterly if <2% leaking Every 2 qtrs if < 1% leaking Every 4 qtrs if <0.5% leaking	Monthly if >2% leaking Quarterly if <2% leaking Every 2 qtrs if < 1% leaking Every 4 qtrs if <0.5% leaking	Monthly if >2% leaking Quarterly if <2% leaking Every 2 qtrs if < 1% leaking Every 4 qtrs if <0.5% leaking	Monthly if >2% leaking Quarterly if <2% leaking Every 2 qtrs if < 1% leaking Every 4 qtrs if <0.5% leaking Every 2 years if <0.25%	Monthly if > 4% Quarterly if < 4%	Monthly If ND leak for 2 successive months = quarterly	**Monthly:** ->5% (with connectors) ->4%(without) **Quarterly:** - <5% (with connectors) - <4% (without) **Semiannual:** - <4% (with) - <3% (without) **Annual:** - <3% (with) - <2% (without)	Monthly if > 4% Quarterly if < 4%	Quarterly	Monthly	Monthly If ND leak for 2 successive months = quarterly	Monthly If ND leak for 2 successive months = quarterly	Monthly If ND leak for 2 successive months = quarterly	Quarterly Annually (pipeline valves)	Monthly (63 R) -or- Once per shift (63 YY)
Monitoring Frequency: Gas Valves	Monthly if >2% leaking Quarterly if <2% leaking Every 2 qtrs if < 1% leaking Every 4 qtrs if <0.5% leaking	Monthly if >2% leaking Quarterly if <2% leaking Every 2 qtrs if < 1% leaking Every 4 qtrs if <0.5% leaking	Monthly if >2% leaking Quarterly if <2% leaking Every 2 qtrs if < 1% leaking Every 4 qtrs if <0.5% leaking	Monthly if >2% leaking Quarterly if <2% leaking Every 2 qtrs if < 1% leaking Every 4 qtrs if <0.5% leaking Every 2 years if <0.25%	Monthly if > 4% Quarterly if < 4%	Monthly If ND leak for 2 successive months = quarterly	**Monthly:** ->5% (with connectors) ->4%(without) **Quarterly:** - <5% (with connectors) - <4% (without) **Semiannual:** - <4% (with) - <3% (without) **Annual:** - <3% (with) - <2% (without)	Monthly if > 4% Quarterly if < 4%	Quarterly	Monthly	Monthly If ND leak for 2 successive months = quarterly	Monthly If ND leak for 2 successive months = quarterly	Monthly If ND leak for 2 successive months = quarterly	Quarterly	Monthly (63 R) -or- Once per shift (63 YY)
Monitoring Frequency: Gas Pressure Relief Valves	Monitor within 5 days of a release	Monitor within 5 days of a release	Monitor within 5 days of a release	Monitor within 5 days of a release	Monitor within 5 days of a release	Monitor within 5 days of release	Monitor within 5 days of a release	Monitor within 5 days of a release	Quarterly and within 24 hours of an atmospheric release	Monitor within 5 days of release	Monitor within 5 days of release	Monitor within 5 days of release	Monitor within 5 days of release	Quarterly and within 24 hours of an atmospheric release	Monitor within 5 days of detection by sight, sound, or smell
Monitoring Frequency: Liquid Pressure Relief Valves	Monitor within 5 days of detection by sight, smell, or sound	Monitor within 5 days of a release or detection by sight, smell, or sound	Monitor within 5 days of a release or detection by sight, smell, or sound	Monitor within 5 days of detection by sight, smell, or sound	Monitor within 5 days of detection by sight, smell, or sound	Monitor within 5 days of detection by sight, smell, or sound	Monitor within 5 days of detection by sight, smell, or sound	Monitor within 5 days of detection by sight, smell, or sound	Monitor within 24 hours of an atmospheric release	Monitor within 5 days of detection by sight, smell, or sound	Monitor within 5 days of detection by sight, smell, or sound	Monitor within 5 days of detection by sight, smell, or sound	Monitor within 5 days of detection by sight, smell, or sound	Monitor within 24 hours of an atmospheric release	Monitor within 5 days of detection by sight, smell, or sound
Monitoring Frequency: Light Liquid Pumps	Monthly monitor & weekly visual Pump repair not required unless leak > 2000 ppm	Monthly monitor & weekly visual	Monthly monitor & weekly visual	Monthly monitor & weekly visual	Monthly monitor & weekly visual	Monthly monitor & weekly visual	Quarterly if <3% leaking Monthly if <10% or 3 leaking, whichever is greater	Quarterly monitor & weekly visual	Quarterly monitor & weekly visual (seals)	Monthly monitor & weekly visual	Monthly monitor & weekly visual	Monthly monitor & weekly visual	Monthly monitor & weekly visual	Quarterly monitor & weekly visual Pump seals (annually)	Monthly (63 R) -or- Once per shift (63 YY)

Item of Comparison	40 CFR 63 Subpart H - SOCMI HON MACT	40 CFR 63 Subpart UU – Equipment Leaks Control Level 2	40 CFR 63 Subpart U - Polymers and Resins I, Elastomer MACT	40 CFR 63 Subparts GGG and MMM – Pharmaceuticals MACT and Pesticide Active Ingredient MACT	LAC 33:III.Chapter 51- Louisiana Refinery MACT and Louisiana Non-HON MACT With NSR Consent Decree Enhancements	40 CFR 60 Subparts VVa (SOCMI) & GGGa (Refinery)	40 CFR 63 Subpart CC - Refinery MACT Modified HON Option
Monitoring Frequency: Compressors	Requires a seal system including barrier fluid, sensor, & alarm with zero emissions to atmosphere Check sensor daily	Requires a seal system including barrier fluid, sensor, & alarm with zero emissions to atmosphere Check sensor daily	Requires a seal system including barrier fluid, sensor, & alarm with zero emissions to atmosphere Check sensor daily	Requires a seal system including barrier fluid, sensor, & alarm with zero emissions to atmosphere Check sensor daily	Quarterly Or Requires a seal system including barrier fluid, sensor, & alarm with zero emissions to atmosphere Check sensor daily	Requires a seal system including barrier fluid, sensor, & alarm with zero emissions to atmosphere Check sensor daily	Requires a seal system including barrier fluid, sensor, & alarm with zero emissions to atmosphere Check sensor daily
Monitoring Frequency: Flanges/ Connectors	Initial monitor Monitor annually if >0.5% leaking Monitor biennially if <0.5% leaking Monitor every 4 years if <0.5% leaking for 2 years HL connectors: Monitor within 5 days of detection by sight, smell, or sound	Initial monitor Monitor annually if >0.5% leaking Monitor every 4 years if <0.5% and >0.25% Monitor at least 50% of connectors within four years if <0.25% HL connectors: Monitor within 5 days of detection by sight, smell, or sound	Monitor annually if >0.5% leaking Monitor biennially if <0.5% leaking Monitor every 4 years if <0.5% leaking for 2 years	Initial monitor Monitor annually if >0.5% leaking Monitor biennially if <0.5% leaking Monitor every 4 years if <0.5% leaking for 2 years HL connectors: Monitor within 5 days of detection by sight, smell, or sound	Annually (random 200 or 10% by unit) If <2% leaking = annually If >2% leaking = quarterly until <2% obtained for 4 qrts otherwise monitor all connectors Monitor within 90 days after welding (xray, etc.) or breaking the seal (OVA)	Monitor within 5 days of detection by sight, smell, or sound	**2 Option**s(if monitoring connectors): **Random 200** - monitor within 1st 12months after Phs III date - every 6 mos. if >2% - annual if <2% and >1% - biannaul if <1% and >.5% - every 4 years if <0.5% **Inspection Alternative** - monitor all gas/ vapor connctors within 12 months after Phs III date - inspect all light liquid connectors (> 3 drops/minute) - annual if >2% leaking - biannual if ,2% and >1% leaking - every 4 years if <1% leaking
Monitoring Frequency: Process Drains	NA	NA	NA	NA	NA	NA	NA
Monitoring Frequency: Heavy Liquid Equipment	Monitor within 5 days of detection by sight, smell, or sound. Repaired systems do not require monitoring	Monitor within 5 days of detection by sight, smell, or sound	Monitor within 5 days of detection by sight, smell, or sound	Monitor within 5 days of detection by sight, smell, or sound. Repaired systems do not require monitoring	Monitor within 5 days of detection by sight, smell, or sound	Monitor within 5 days of detection by sight, smell, or sound	Monitor within 5 days of detection by sight, smell, or sound. Repaired systems do not require monitoring

Item of Comparison	LAC 33:III Chapter 51- Louisiana Refinery MACT and Louisiana Non-HON MACT	LAC 33:III.2122 Louisiana Fugitive Emission Control for Nonattainment	40 CFR 61 Subparts F, J and V and 40 CFR 63 Subpart HH – PVC, Benzene, and Oil & Natural Gas Production MACT	40 CFR 60 Subparts VV (SOCMI), GGG (Refinery) & KKK (Gas Processing Plants)	40 CFR 63 Subpart TT – Equipment Leaks Control Level 1	RCRA 40 CFR 264 Subpart BB & 40 CFR 265 Subpart BB	LAC 33:III.2121 Louisiana Fugitive Emission Control and 40 CFR 63 Subpart III	40 CFR 63 Subparts R (Gasoline Distribution) and YY (Hydrogen Fluoride Production)
Monitoring Frequency: Compressors	Quarterly Or Requires a seal system including barrier fluid, sensor, & alarm with zero emissions to atmosphere Check sensor daily	Quarterly monitor (seals)	Requires a seal system including barrier fluid, sensor, & alarm with zero emissions to atmosphere Check sensor daily	Requires a seal system including barrier fluid, sensor, & alarm with zero emissions to atmosphere Check sensor daily	Requires a seal system including barrier fluid, sensor, & alarm with zero emissions to atmosphere Check sensor daily	Requires a seal system including barrier fluid, sensor, & alarm with zero emissions to atmosphere Check sensor daily	Quarterly monitor & weekly visual (seals)	Monthly (63 R) -or- Once per shift (63 YY)
Monitoring Frequency: Flanges/ Connectors	Annually (random 200 or 10% by unit) If <2% leaking = annually If >2% leaking = quarterly until <2% obtained for 4 qrts otherwise monitor all connectors Monitor within 90 days after welding (xray, etc.) or breaking the seal (OVA)	Weekly visual (no records) Monitor within 5 days of detection by sight, smell, or sound	Monitor within 5 days of detection by sight, smell, or sound	Monitor within 5 days of detection by sight, smell, or sound	Monitor within 5 days of detection by sight, smell, or sound	Monitor within 5 days of detection by sight, smell, or sound	Monitor within 5 days of detection by sight, smell, or sound	Monthly (63 R) -or- Once per shift (63 YY)
Monitoring Frequency: Process Drains	NA	Annually monitor	NA	NA	NA	NA	Annually monitor	NA
Monitoring Frequency: Heavy Liquid Equipment	Monitor within 5 days of detection by sight, smell, or sound	Monitor if leak suspected by sight, smell, or sound	NA	Monitor within 5 days of detection by sight, smell, or sound	Monitor within 5 days of detection by sight, smell, or sound	Monitor within 5 days of detection by sight, smell, or sound	Monitor if leak suspected by sight, smell, or sound	Monitor within 5 days of detection by sight, smell, or sound

Item of Comparison	40 CFR 63 Subpart H - SOCMI HON MACT	40 CFR 63 Subpart UU – Equipment Leaks Control Level 2	40 CFR 63 Subpart U - Polymers and Resins I, Elastomer MACT	40 CFR 63 Subparts GGG and MMM – Pharmaceuticals MACT and Pesticide Active Ingredient MACT	LAC 33:III.Chapter 51-Louisiana Refinery MACT and Louisiana Non-HON MACT With NSR Consent Decree Enhancements	40 CFR 60 Subparts VVa (SOCMI) & GGGa (Refinery)	40 CFR 63 Subpart CC - Refinery MACT Modified HON Option	LAC 33:III Chapter 51-Louisiana Refinery MACT and Louisiana Non-HON MACT	LAC 33:III.2122 Louisiana Fugitive Emission Control for Nonattainment	40 CFR 61 Subparts F, J and V and 40 CFR 63 Subpart HH – PVC, Benzene, and Oil & Natural Gas Production MACT	40 CFR 60 Subparts VV (SOCMI), GGG (Refinery) & KKK (Gas Processing Plants)	40 CFR 63 Subpart TT – Equipment Leaks Control Level 1	RCRA 40 CFR 264 Subpart BB & 40 CFR 265 Subpart BB	LAC 33:III.2121 Louisiana Fugitive Emission Control and 40 CFR 63 Subpart III	40 CFR 63 Subparts R (Gasoline Distribution) and YY (Hydrogen Fluoride Production)
Monitoring Frequency: Closed Vent Systems	Hard piping: Initial monitoring Annual visual Duct Work: Annual monitor	Hard piping: Initial monitoring Annual visual Duct Work: Annual monitor	Hard Piping: Annual visual Duct Work: Annual monitor	Hard piping: Initial monitoring Annual visual Duct Work: Annual monitor	Annually monitor	Hard piping: Initial monitoring Annual visual Duct work: Annual monitor	Hard piping: Initial monitoring Annual visual Duct Work: Annual monitor	Annually monitor	NA	Annually monitor	Hard piping: Initial monitoring Annual visual Duct work: Annual monitor	Hard piping: Initial monitoring Annual visual Duct work: Annual monitor	Hard piping: Initial monitoring Annual visual	Monitor if leak suspected by sight, smell, or sound	Hard piping: Initial monitoring Annual visual Duct Work: Annual monitor
Monitoring Frequency: Open-ended valves/lines	Requires cap, plug, blind flange, or 2nd valve	Requires cap, plug, blind flange, or 2nd valve	Requires cap, plug, blind flange, or 2nd valve	Requires cap, plug, blind flange, or 2nd valve	Requires cap, plug, blind flange, or 2nd valve	Requires cap, plug, blind flange, or 2nd valve	Requires cap, plug, blind flange, or 2nd valve	Requires cap, plug, blind flange, or 2nd valve	Requires cap, plug, blind flange, or 2nd valve Monitor annually	Requires cap, plug, blind flange, or 2nd valve	Requires cap, plug, blind flange, or 2nd valve	Requires cap, plug, blind flange, or 2nd valve	Requires cap, plug, blind flange, or 2nd valve	Requires cap, plug, blind flange, or 2nd valve Monitor if leak suspected by sight, smell, or sound	Requires cap, plug, blind flange, or 2nd valve
Monitoring Frequency: Sampling Points/ Connections	Requires closed purge, closed loop, or closed vent system Return or recycle purge	Requires closed purge, closed loop, or closed vent system Return or recycle purge	Requires closed purge, or closed loop system	Requires closed purge, closed loop, or closed vent system Return or recycle purge	Requires closed purge, or closed vent system Return or recycle purge Zero emissions to atm	Requires closed purge system, or closed vent system Return or recycle purge	Requires closed purge, closed loop, or closed vent system Return or recycle purge	Requires closed purge, or closed vent system Return or recycle purge Zero emissions to atm	NA	Requires closed purge, closed vent system Return or recycle purge Zero purge to atm	Requires closed purge system, or closed vent system Return or recycle purge	Requires closed purge system, or closed vent system Return or recycle purge	Requires closed purge system, or closed vent system Return or recycle purge	Monitor within 5 days of detection by sight, smell, or sound	Requires closed purge, closed loop, or closed vent system Return or recycle purge
Monitoring Frequency: Agitators	Monthly monitor & weekly visual	Monthly monitor & weekly visual	Monthly monitor & weekly visual	Monthly monitor & weekly visual	Within 5 days of detection by sight, smell, or sound	NA	Monthly monitor & weekly visual	Within 5 days of detection by sight, smell, or sound	NA	NA	NA	Monthly monitor & weekly visual	NA	Monitor within 5 days of detection by sight, smell, or sound	Monthly monitor & weekly visual
Monitoring Frequency: Surge Control Vessels and Bottoms Receivers	Requires closed vent system	NA	Requires closed vent system Exempt from requirements if contains a latex and located downstream of stripping operation.	Requires closed vent system	Requires closed vent system	NA	Requires closed vent system	Requires closed vent system	NA	Requires closed vent system	NA	NA	NA	Monitor within 5 days of detection by sight, smell, or sound	Requires closed vent system
Monitoring Frequency: Visual Leaks	Monitor within 5 days of detection by sight, smell, or sound	Monitor within 5 days of detection by sight, smell, or sound	Monitor within 5 days of detection by sight, smell, or sound	Monitor within 5 days of detection by sight, smell, or sound			Monitor within 5 days of detection by sight, smell, or sound		Monitor immediately any component leaking based on sight, smell, or sound			Monitor within 5 days of detection by sight, smell, or sound	NA	Monitor immediately any component leaking based on sight, smell, or sound	Monitor within 5 days of detection by sight, smell, or sound
Monitoring Frequency: Instrument-ation Systems	Monitor within 5 days of detection by sight, smell, or sound	Monitor within 5 days of detection by sight, smell, or sound	Monitor within 5 days of detection by sight, smell, or sound	Monitor within 5 days of detection by sight, smell, or sound	Monitor within 5 days of detection by sight, smell, or sound	NA	Monitor within 5 days of detection by sight, smell, or sound	Monitor within 5 days of detection by sight, smell, or sound	NA	NA	NA	Monitor within 5 days of detection by sight, smell, or sound	NA	Monitor within 5 days of detection by sight, smell, or sound	Monitor within 5 days of detection by sight, smell, or sound

Item of Comparison	40 CFR 63 Subpart H - SOCMI HON MACT	40 CFR 63 Subpart UU – Equipment Leaks Control Level 2	40 CFR 63 Subpart U - Polymers and Resins I, Elastomer MACT	40 CFR 63 Subparts GGG and MMM – Pharmaceuticals MACT and Pesticide Active Ingredient MACT	LAC 33:III.Chapter 51-Louisiana Refinery MACT and Louisiana Non-HON MACT With NSR Consent Decree Enhancements	40 CFR 60 Subparts VVa (SOCMI) & GGGa (Refinery)	40 CFR 63 Subpart CC - Refinery MACT Modified HON Option	LAC 33:III Chapter 51-Louisiana Refinery MACT and Louisiana Non-HON MACT	LAC 33:III.2122 Louisiana Fugitive Emission Control for Nonattainment	40 CFR 61 Subparts F, J and V and 40 CFR 63 Subpart HH – PVC, Benzene, and Oil & Natural Gas Production MACT	40 CFR 60 Subparts VV (SOCMI), GGG (Refinery) & KKK (Gas Processing Plants)	40 CFR 63 Subpart TT – Equipment Leaks Control Level 1	RCRA 40 CFR 264 Subpart BB & 40 CFR 265 Subpart BB	LAC 33:III.2121 Louisiana Fugitive Emission Control and 40 CFR 63 Subpart III	40 CFR 63 Subparts R (Gasoline Distribution) and YY (Hydrogen Fluoride Production)
Skip periods	**Valves only:** Initial performance of 2% leaks = quarterly Initial performance of 1% leaks = semi-annually **Pumps only:** No skip period only avoid QIP requirements Batch process monitoring Historical performance acceptable without prior approval	**Valves only:** Monthly if >2% Quarterly if <2% Semiannually if <1% Annually if <0.5% Biennally if <0.25% **Pumps only:** No skip period only avoid QIP requirements	**Valves only:** Initial performance of 2% leaks = quarterly Initial performance of 1% leaks = semi-annually **Pumps only:** No skip period only avoid QIP requirements Batch process monitoring	**Valves only:** Initial performance of 2% leaks = quarterly Initial performance of 1% leaks = semi-annually **Pumps only:** No skip period only avoid QIP requirements Batch process monitoring Historical performance acceptable without prior approval	**Valves only:** Not Allowed	**Valves only:** 2 consecutive quarters <2% = skip 1 quarter 5 consecutive quarters <2% = skip 3 quarters	**Valves (with connectors):** Initial performance of 5% leaks = quarterly Initial performance of 4% leaks = semi-annually **Valves (without connectors):** Initial performance of 4% leaks = quarterly Initial performance of 3% leaks = semi-annually **Pumps only:** No skip period only avoid QIP requirements Historical performance acceptable without prior approval	**Valves only:** 2 consecutive quarters <2% = semi-annual 2 consecutive semi-annual < 2% = annual >2% leaking = increase monitoring Historical performance acceptable without prior approval	**Valves only:** 2 consecutive quarters < 2% = skip 1 quarter 5 consecutive quarters < 2% = skip 3 quarters Total leaking FECs cannot be > 4% Historical performance acceptable without prior approval	**Valves only:** 2 successive months ND = first month of every qtr until leak detected 2 consecutive qtrs < 2% = skip 1 qtr 5 consecutive qtrs < 2% = skip 3 qtrs Vinyl Chloride NESHAP allows 200 or 90% valves if <2%	**Valves only:** 2 consecutive quarters <2% = skip 1 quarter 5 consecutive quarters <2% = skip 3 quarters	**Valves only:** 2 consecutive quarters <2% = skip 1 quarter 5 consecutive quarters <2% = skip 3 quarters Monthly if >2%	**Valves only:** 2 consecutive quarters <2% = skip 1 quarter 5 consecutive quarters <2% = skip 3 quarters	**Valves only:** 2 consecutive quarters <2% = skip 1 qtr for valves and pumps (LL) 5 consecutive quarters <2% = skip 3 qtrs	None for 63 R
Light/heavy liquid definition and exemptions	Light liquid has VP > 0.3 kPa @ 20 degC	Light liquid has VP > 0.3 kPa @ 20 degC	Light liquid has VP > 0.2 kPa @ 20 degC	Light liquid has VP > 0.3 kPa @ 20 degC & is 20%w of total process stream	Light liquid has VP > 0.3 kPa @ 20 degC or a 10% evaporation point > 150 degC using ASTM D-86	Light liquid has VP > 0.3 kPa @ 20 degC & is 20%w of total process stream	Light liquid has VP > 0.3 kPa @ 20 degC or a 10% evaporation point > 150 degC using ASTM D-86	Light liquid has VP > 0.3 kPa @ 20 degC or a 10% evaporation point > 150 degC using ASTM D-86		Light liquid has VP >0.3 kPa @ 20 degC or a 10% evaporation point > 150 degC using ASTM D-86	Light liquid has VP > 0.3 kPa @ 20 degC & is 20%w of total process stream	Light liquid has VP > 0.3 kPa @ 20 degC	Light liquid has VP > 0.3 kPa @ 20 degC	NA	
Liquid dripping definition										Visible leakage including spraying, misting, clouding and ice formation				Per HON	
Materials included in VOC definition					Consistent with LAC 33:III.2117	TOC excluding methane, ethane, 1-1-1-TCE, methylene chloride, and various CFCs		Consistent with LAC 33:III.2117			TOC excluding methane, ethane, 1-1-1-TCE, methylene chloride, and various CFCs		Consistent with LAC 33:III.2117		
Monitoring Method	Method 21 Calibrate within 2000 ppm	Method 21 Calibrate within 2000 ppm	Method 21	Method 21 Calibrate within 2000 ppm	LAC 33:III.6077	Method 21	LAC 33:III Chapter 60, 61 or 63	LAC 33:III.6077	Method 21	Method 21	Method 21	40 CFR 264.1063 (b)	Method 21	Visual, audible, or olfactory	
Monitoring Distance	Consistent with EPA protocol	Consistent with EPA protocol	Consistent with EPA protocol	Consistent with EPA protocol	Not specified	Consistent with EPA protocol	Consistent with EPA protocol	Not specified	Consistent with EPA protocol	Consistent with EPA protocol	Consistent with EPA protocol	Consistent with EPA protocol	Not specified	NA	

Item of Comparison	40 CFR 63 Subpart H - SOCMI HON MACT	40 CFR 63 Subpart UU – Equipment Leaks Control Level 2	40 CFR 63 Subpart U - Polymers and Resins I, Elastomer MACT	40 CFR 63 Subparts GGG and MMM – Pharmaceuticals MACT and Pesticide Active Ingredient MACT	LAC 33:III.Chapter 51-Louisiana Refinery MACT and Louisiana Non-HON MACT With NSR Consent Decree Enhancements	40 CFR 60 Subparts VVa (SOCMI) & GGGa (Refinery)	40 CFR 63 Subpart CC - Refinery MACT Modified HON Option	LAC 33:III Chapter 51-Louisiana Refinery MACT and Louisiana Non-HON MACT	LAC 33:III.2122 Louisiana Fugitive Emission Control for Nonattainment	40 CFR 61 Subparts F, J and V and 40 CFR 63 Subpart HH – PVC, Benzene, and Oil & Natural Gas Production MACT	40 CFR 60 Subparts VV (SOCMI), GGG (Refinery) & KKK (Gas Processing Plants)	40 CFR 63 Subpart TT – Equipment Leaks Control Level 1	RCRA 40 CFR 264 Subpart BB & 40 CFR 265 Subpart BB	LAC 33:III.2121 Louisiana Fugitive Emission Control and 40 CFR 63 Subpart III	40 CFR 63 Subparts R (Gasoline Distribution) and YY (Hydrogen Fluoride Production)
Comments			Comply with Subpart H of SOCMI HON This table outlines HON requirements for Elastomer MACT	Comply with HON except for specific deviations These two regulations are carbon copies of each other											
Post repair inspection	Valves, after repair, monitored at least once within 3 months Not specific, but required to maintain date component rechecked after maintenance and instrument reading upon check	Valves, after repair, monitored at least once within 3 months Not specific, but required to maintain date component rechecked after maintenance and instrument reading upon check	Not specific, but required to maintain date component rechecked after maintenance and instrument reading upon check	Valves, after repair, monitored at least once within 3 months Not specific, but required to maintain date component rechecked after maintenance and instrument reading upon check	Not specified, but assumed to be required immediately after repair to confirm a repair was successful	Not specified, but assumed to be required immediately after repair to confirm a repair was successful	Valves, after repair, monitored at least once within 3 months If monitoring connectors, monitor repaired connector within 2st 3 months after repair. Not specific, but required to maintain date component rechecked after maintenance and instrument reading upon check	Not specified, but assumed to be required immediately after repair to confirm a repair was successful	Not specific, but required to maintain date component rechecked after maintenance and instrument reading upon check	Not specified, but assumed to be required immediately after repair to confirm a repair was successful	Not specified, but assumed to be required immediately after repair to confirm a repair was successful	Valves, after repair, monitored at least once within 3 months	Not specified, but assumed to be required immediately after repair to confirm a repair was successful	Not specific, but required to maintain date component rechecked after maintenance and instrument reading upon check	No visible leak or holds a test pressure
Repair periods (1st/Final Attempt)	5 day/15 days	5 day/15 days	5 days/15 days	5 days/15 days	5 days*/15 days *Includes monitoring	5 days/15 days	5 day/15 days	5 days/15 days	15 days	5 days/15 days	5 days/15 days	5 days/15 days	5 days/15 days	15 days	5 days/15 days
Calibration gas	Zero air, and mixtures dependent on phase monitored	Zero air, methane or n-hexane and air at a concentration of approximately 2,000 ppm	Zero air, air mixtures dependent of phase monitored	Zero air, methane or n-hexane and air at a concentration of approximately 2,000 ppm	Zero air, methane or n-hexane and air at a concentration of about but less than 10,000 ppm	Zero air, methane or n-hexane and air at a concentration no more than 2,000 ppm above leak definition and highest scale with a calibration gas of approximately 10,000 ppm	Zero air, and mixtures dependent on phase monitored	Zero air, methane or n-hexane and air at a concentration of about but less than 10,000 ppm	Not specified in rule	Zero air, methane or n-hexane and air at a concentration of about but less than 10,000 ppm	Zero air, methane or n-hexane and air at a concentration of about but less than 10,000 ppm	Zero air, methane or n-hexane and air at a concentration of about but less than 10,000 ppm	Zero air, methane or n-hexane and air at a concentration of about but less than 10,000 ppm	Not specified in rule	NA
Calibration Frequency	Before use on each day	Before use on each day	Before use on each day	Before use on each day	Before use on each day	Before use on each day	Before use on each day	Before use on each day	Not specified in rule	Before use each day	Before use on each day	Before use on each day	Before use on each day	Not specified in rule	NA
Criteria for unsafe to monitor exemption	**Valves & connectors:** Immediate danger Follow written plan to monitor when safe	**Valves & connectors:** Immediate danger Follow written plan to monitor when safe	**Valves & connectors:** Immediate danger Follow written plan to monitor when safe	**Valves & connectors:** Immediate danger Follow written plan to monitor when safe	**Valves, connectors & CVS:** Immediate danger Follow written plan to monitor when safe	**Valves:** Immediate danger Follow written plan to monitor when safe	**Valves & connectors:** Immediate danger Follow written plan to monitor when safe	**Valves, connectors & CVS:** Immediate danger Follow written plan to monitor when safe	No criteria, but monitor when safe	**Valves:** Immediate danger Follows written plan to monitor when safe	**Valves:** Immediate danger Follow written plan to monitor when safe	**Valves & connectors:** Immediate danger Follow written plan to monitor when safe	**Valves:** Immediate danger Follow written plan to monitor when safe	No criteria, but monitor when safe	**Valves & connectors:** Immediate danger Follow written plan to monitor when safe

Item of Comparison	40 CFR 63 Subpart H - SOCMI HON MACT	40 CFR 63 Subpart UU – Equipment Leaks Control Level 2	40 CFR 63 Subpart U - Polymers and Resins I, Elastomer MACT	40 CFR 63 Subparts GGG and MMM – Pharmaceuticals MACT and Pesticide Active Ingredient MACT	LAC 33:III.Chapter 51-Louisiana Refinery MACT and Louisiana Non-HON MACT With NSR Consent Decree Enhancements	40 CFR 60 Subparts VVa (SOCMI) & GGGa (Refinery)	40 CFR 63 Subpart CC - Refinery MACT Modified HON Option	LAC 33:III Chapter 51-Louisiana Refinery MACT and Louisiana Non-HON MACT	LAC 33:III.2122 Louisiana Fugitive Emission Control for Nonattainment	40 CFR 61 Subparts F, J and V and 40 CFR 63 Subpart HH – PVC, Benzene, and Oil & Natural Gas Production MACT	40 CFR 60 Subparts VV (SOCMI), GGG (Refinery) & KKK (Gas Processing Plants)	40 CFR 63 Subpart TT – Equipment Leaks Control Level 1	RCRA 40 CFR 264 Subpart BB & 40 CFR 265 Subpart BB	LAC 33:III.2121 Louisiana Fugitive Emission Control and 40 CFR 63 Subpart III	40 CFR 63 Subparts R (Gasoline Distribution) and YY (Hydrogen Fluoride Production)
Criteria for inaccessible components exemption	**Connector:** Buried, insulated, obstructed, >25 ft scaffold & >2m support surface (referred to as inaccessible)	**Connector:** Buried, insulated, obstructed, >25 ft scaffold & >2m support surface (referred to as inaccessible)	**Connector:** Buried, insulated, obstructed, >25 ft scaffold & >2m support surface (referred to as inaccessible)	**Connector:** Buried, insulated, obstructed, >25 ft scaffold & >2m support surface (referred to as inaccessible)	**Connector:** Buried, insulated, obstructed, >25 ft scaffold & >2m support surface (referred to as inaccessible)	**Connector:** Buried, insulated, obstructed, >25 ft scaffold & >2m support surface (referred to as inaccessible)	**Random 200 option** - only accessible connectors **Inspection Alternative** - only accessible connectors	**Connector:** Buried, insulated, obstructed, >25 ft scaffold & >2m support surface (referred to as inaccessible)				**Connector:** Buried, insulated, obstructed, >25 ft scaffold & >2m support surface (referred to as inaccessible)			**Connector:** Buried, insulated, obstructed, >25 ft scaffold & >2m support surface (referred to as inaccessible)
Criteria for difficult to monitor	Cannot monitor without elevating >2m above support surface Follow written plan to annually monitor	Cannot monitor without elevating >2m above support surface Follow written plan to annually monitor	Cannot monitor without elevating >2m above support surface Follow written plan to annually monitor	Cannot monitor without elevating >2m above support surface Follow written plan to annually monitor	Cannot monitor without elevating >2m above support surface Follow written plan to annually monitor	Cannot monitor without elevating >2m above support surface Follow written plan to annually monitor	Cannot monitor without elevating >2m above support surface Follow written plan to annually monitor	Cannot monitor without elevating >2m above support surface Follow written plan to annually monitor	Cannot monitor without elevating >2m above support surface Follow written plan to annually monitor	Cannot monitor without elevating >2m above support surface Follow written plan to annually monitor	Cannot monitor without elevating >2m above support surface Follow written plan to annually monitor	Cannot monitor without elevating >2m above support surface Follow written plan to annually monitor	Cannot monitor without elevating >2m above support surface Follow written plan to annually monitor	Cannot monitor without elevating >2m above support surface Follow written plan to annually monitor	Cannot monitor without elevating >2m above support surface Follow written plan to annually monitor
Exemptions	Vacuum service Unsafe to monitor Dual Mechanical seals with barrier fluid and alarm Closed vent system No detectable emissions Difficult to monitor <.75" FECs in instrumentation systems PRVs equipped with rupture disk	Vacuum service Unsafe to monitor Dual Mechanical seals with barrier fluid and alarm Closed vent system No detectable emissions Difficult to monitor Equipment in service <300 hours per year	Vacuum service Unsafe to monitor Dual Mechanical seals with barrier fluid and alarm Closed vent system No detectable emissions Difficult to monitor Equipment in service <300 hours per year	Vacuum service Unsafe to monitor Dual Mechanical seals with barrier fluid and alarm Closed vent system No detectable emissions Difficult to monitor Equipment in service <300 hours per year	Vacuum service Unsafe to monitor Dual Mechanical seals with barrier fluid and alarm Closed vent system No detectable emissions Difficult to monitor Equipment in service <300 hours per year	Vacuum service Unsafe to monitor Dual Mechanical seals with barrier fluid and alarm Closed vent system No detectable emissions Difficult to monitor	Vacuum service Unsafe to monitor Dual Mechanical seals with barrier fluid and alarm Closed vent system No detectable emissions Difficult to monitor <.75" FECs in instrumentation systems PRVs equipped with rupture disk	Vacuum service Unsafe to monitor Dual Mechanical seals with barrier fluid and alarm Closed vent system No detectable emissions Difficult to monitor Equipment in service <300 hours per year	Vacuum service Unsafe to monitor Dual Mechanical seals Vapor pressure <0.0435 psia R&D facilities (< 100 FEC) Insulated components	Vacuum service Unsafe to monitor Dual Mechanical seals with barrier fluid and alarm Closed vent system No detectable emissions Difficult to monitor	Vacuum service Unsafe to monitor Dual Mechanical seals with barrier fluid and alarm Closed vent system No detectable emissions Difficult to monitor	Vacuum service Unsafe to monitor Dual Mechanical seals with barrier fluid and alarm Closed vent system No detectable emissions Difficult to monitor Equipment in service <300 hours per year	Vacuum service Unsafe to monitor Dual Mechanical seals with barrier fluid and alarm Closed vent system No detectable emissions Difficult to monitor	Vacuum service Unsafe to monitor Dual Mechanical seals Vapor pressure <0.0435 psia R&D facilities (< 100 FEC) Check valves	Vacuum service Unsafe to monitor Dual Mechanical seals with barrier fluid and alarm Closed vent system Difficult to monitor Open ended lines for emergency PRVs equipped with rupture disk
Exemptions (Continued)	Unmanned sites: Monthly visual inspections allowed Compressors operated <300 hrs or tied to CVS or VRU	Open ended lines for emergency PRVs equipped with rupture disk	Open ended lines for emergency PRVs equipped with rupture disk	Open ended lines for emergency PRVs equipped with rupture disk	Open ended lines for emergency PRVs equipped with rupture disk		Unmanned sites: Monthly visual inspections allowed Compressors operated <300 hrs or tied to CVS or VRU	Open ended lines for emergency PRVs equipped with rupture disk	Components of shutdown repair list						Unmanned sites: Monthly visual inspections allowed Compressors operated <300 hrs or tied to CVS or VRU

Item of Comparison	40 CFR 63 Subpart H - SOCMI HON MACT	40 CFR 63 Subpart UU – Equipment Leaks Control Level 2	40 CFR 63 Subpart U - Polymers and Resins I, Elastomer MACT	40 CFR 63 Subparts GGG and MMM – Pharmaceuticals MACT and Pesticide Active Ingredient MACT	LAC 33:III.Chapter 51-Louisiana Refinery MACT and Louisiana Non-HON MACT With NSR Consent Decree Enhancements	40 CFR 60 Subparts VVa (SOCMI) & GGGa (Refinery)	40 CFR 63 Subpart CC - Refinery MACT Modified HON Option	LAC 33:III Chapter 51-Louisiana Refinery MACT and Louisiana Non-HON MACT	LAC 33:III.2122 Louisiana Fugitive Emission Control for Nonattainment	40 CFR 61 Subparts F, J and V and 40 CFR 63 Subpart HH – PVC, Benzene, and Oil & Natural Gas Production MACT	40 CFR 60 Subparts VV (SOCMI), GGG (Refinery) & KKK (Gas Processing Plants)	40 CFR 63 Subpart TT – Equipment Leaks Control Level 1	RCRA 40 CFR 264 Subpart BB & 40 CFR 265 Subpart BB	LAC 33:III.2121 Louisiana Fugitive Emission Control and 40 CFR 63 Subpart III	40 CFR 63 Subparts R (Gasoline Distribution) and YY (Hydrogen Fluoride Production)
Delay of repair	**All equipment:** Technically infeasible w/o PU shutdown; Isolated and out of HAP service **Valves, Connectors, Agitators:** Purged material from repair causes greater emissions than fugitive leak; recover and destroy in control device **Pumps:** Replacing with DMS (within 6 months)	**All equipment:** Technically infeasible w/o PU shutdown; Isolated and out of HAP service **Valves, Connectors, Agitators:** Purged material from repair causes greater emissions than fugitive leak; recover and destroy in control device **Pumps:** Replacing with DMS (within 6 months)	**All equipment:** Technically infeasible w/o PU shutdown; Isolated and out of HAP service **Valves, Connector, Agitators:** Purged material from repair causes greater emissions than fugitive leak; recover and destroy in control device **Pumps:** Replacing with DMS (within 6 months)	**All equipment:** Technically infeasible w/o PU shutdown; Isolated and out of HAP service **Valves, Connectors, Agitators:** Purged material from repair causes greater emissions than fugitive leak; recover and destroy in control device **Pumps:** Replacing with DMS (within 6 months)	**All equipment:** Technically infeasible w/o PU shutdown; Isolated and out of VOTAP service **Valves, connectors & agitators:** Purged material from repair causes greater emissions than fugitive leak; recover and destroy in control device Drill and tap required on non-control valves, if feasible, before placing on delay of repair All components on delay of repair must be monitored per routine monitoring **Pumps:** Replacing with DMS (within 6 months)	**All equipment:** Technically infeasible w/o PU shutdown; Isolated and out of VOC service **Valves:** Purged material from repair causes greater emissions than fugitive leak; recover and destroy in control device **Pumps:** Replacing with DMS (within 6 months)	**All equipment:** Technically infeasible w/o PU shutdown; Isolated and out of HAP service **Valves, Connectors, Agitators:** Purged material from repair causes greater emissions than fugitive leak; recover and destroy in control device **Pumps:** Replacing with DMS (within 6 months)	**All equipment:** Technically infeasible w/o PU shutdown; Isolated and out of VOTAP service **Valves, connectors & agitators:** Purged material from repair causes greater emissions than fugitive leak; recover and destroy in control device **Pumps:** Replacing with DMS (within 6 months)	**All equipment:** Requires a PU shutdown Isolated or bypassed to reduce leakage Shutdown would create more emissions than repair would eliminate	**All equipment:** Technically infeasible w/o PU shutdown; Isolated and out of VHAP service **Valves:** Purged material from repair causes greater emissions than fugitive leak; recover and destroy in control device **Pumps:** Replacing with DMS (within 6 months)	**All equipment:** Technically infeasible w/o PU shutdown; Isolated and out of VOC service **Valves:** Purged material from repair causes greater emissions than fugitive leak; recover and destroy in control device **Pumps:** Replacing with DMS (within 6 months)	**All equipment:** Technically infeasible w/o PU shutdown; Isolated and out of HAP service **Valves, Connectors, Agitators:** Purged material from repair causes greater emissions than fugitive leak; recover and destroy in control device **Pumps:** Replacing with DMS (within 6 months)	**All equipment:** Technically infeasible w/o PU shutdown; Isolated and out of VOC service **Valves:** Purged material from repair causes greater emissions than fugitive leak; recover and destroy in control device **Pumps:** Replacing with DMS (within 6 months)	**All equipment:** Requires a PU shutdown Isolated or bypassed to reduce leakage Shutdown would create more emissions than repair would eliminate	**All equipment:** Technically infeasible w/o PU shutdown; Isolated and out of HAP service **Valves, Connectors, Agitators:** Purged material from repair causes greater emissions than fugitive leak; recover and destroy in control device **Pumps:** Replacing with DMS (within 6 months)
Delay of repair beyond PU shutdown	**Valves:** Assembly replacement is necessary during PU shutdown, valve assemblies are depleted, and assemblies were sufficiently stocked before depletion.	**Valves:** Assembly replacement is necessary during PU shutdown, valve assemblies are depleted, and assemblies were sufficiently stocked before depletion.	**Valves:** Assembly replacement is necessary during PU shutdown, valve assemblies are depleted, and assemblies were sufficiently stocked before depletion.	**Valves:** Assembly replacement is necessary during PU shutdown, valve assemblies are depleted, and assemblies were sufficiently stocked before depletion.	**Valves:** Assembly replacement is necessary during PU shutdown, valve assemblies are depleted, and assemblies were sufficiently stocked before depletion	**Valves:** Assembly replacement is necessary during PU shutdown, valve assemblies are depleted, and assemblies were sufficiently stocked before depletion	**Valves:** Assembly replacement is necessary during PU shutdown, valve assemblies are depleted, and assemblies were sufficiently stocked before depletion.	**Valves:** Assembly replacement is necessary during PU shutdown, valve assemblies are depleted, and assemblies were sufficiently stocked before depletion		**Valves:** Assembly replacement is necessary during PU shutdown, valve assemblies are depleted, and assemblies were sufficiently stocked before depletion.	**Valves:** Assembly replacement is necessary during PU shutdown, valve assemblies are depleted, and assemblies were sufficiently stocked before depletion	**Valves:** Assembly replacement is necessary during PU shutdown, valve assemblies are depleted, and assemblies were sufficiently stocked before depletion	**Valves:** Assembly replacement is necessary during PU shutdown, valve assemblies are depleted, and assemblies were sufficiently stocked before depletion		**Valves:** Assembly replacement is necessary during PU shutdown, valve assemblies are depleted, and assemblies were sufficiently stocked before depletion.
Tagging	Leaking components	Leaking components	Leaking components	Leaking components	Leaking components	Leaking components	Leaking components	Leaking components	Leaking components	Leaking components and affected components	Leaking components	Leaking components	Physical tag required	Leaking components	None
Use of background concentration data	Subtract for determining compliance	Subtract for determining compliance	Subtract for determining compliance	Subtract for determining compliance	Subtract for determining compliance	Subtract for determining compliance	Subtract for determining compliance	Subtract for determining compliance	Not specified in rule	Subtract for determining compliance	Subtract for determining compliance	Subtract for determining compliance		Not specified in rule	NA

Item of Comparison	40 CFR 63 Subpart H - SOCMI HON MACT	40 CFR 63 Subpart UU – Equipment Leaks Control Level 2	40 CFR 63 Subpart U - Polymers and Resins I, Elastomer MACT	40 CFR 63 Subparts GGG and MMM – Pharmaceuticals MACT and Pesticide Active Ingredient MACT	LAC 33:III.Chapter 51-Louisiana Refinery MACT and Louisiana Non-HON MACT With NSR Consent Decree Enhancements	40 CFR 60 Subparts VVa (SOCMI) & GGGa (Refinery)	40 CFR 63 Subpart CC - Refinery MACT Modified HON Option	LAC 33:III Chapter 51-Louisiana Refinery MACT and Louisiana Non-HON MACT	LAC 33:III.2122 Louisiana Fugitive Emission Control for Nonattainment	40 CFR 61 Subparts F, J and V and 40 CFR 63 Subpart HH – PVC, Benzene, and Oil & Natural Gas Production MACT	40 CFR 60 Subparts VV (SOCMI), GGG (Refinery) & KKK (Gas Processing Plants)	40 CFR 63 Subpart TT – Equipment Leaks Control Level 1	RCRA 40 CFR 264 Subpart BB & 40 CFR 265 Subpart BB	LAC 33:III.2121 Louisiana Fugitive Emission Control and 40 CFR 63 Subpart III	40 CFR 63 Subparts R (Gasoline Distribution) and YY (Hydrogen Fluoride Production)
Recordkeeping	Leak and repair records Component Inventory Connector monitoring schedule DMS records Valves records Exemption data Batch Process Monitoring HL determinations Visual inspection dates Compliance tests CVS system design and operation QIP	Leak and repair records Component Inventory Connector monitoring schedule DMS records Valves records Exemption data Batch Process Monitoring HL determinations Visual inspection dates Compliance tests CVS system design and operation QIP	Leak and repair records Component Inventory Connector monitoring schedule DMS records Valves records Exemption data Batch Process Monitoring HL determinations Visual inspection dates Compliance tests CVS system design and operation QIP	Leak and repair records Component Inventory Connector monitoring schedule DMS records Valves records Exemption data Batch Process Monitoring HL determinations Visual inspection dates Compliance tests CVS system design and operation QIP	Leak and repair records Component Inventory Connector monitoring schedule Valves records Exemption data CVS system design and operation DORs must be signed within 30 days of leak identifcation	Leak and repair records Component Inventory CVS design and operation records Valve records Exemption data	Leak and repair records Component Inventory Connector monitoring schedule DMS records Valves records Exemption data HL determinations Visual inspection dates Compliance tests CVS system design and operation QIP	Leak and repair records Component Inventory Connector monitoring schedule Valves records Exemption data CVS system design and operation	Leak and repair records Component inventory Calibration records	Leak and repair records CVS design and operation records Component Inventory Valve records Exemption data	Leak and repair records Component Inventory CVS design and operation records Valve records Exemption data	Leak and repair records Component Inventory CVS design and operation records Valve records Exemption data	Leak and repair records Component Inventory CVS design and operation records Valve records Exemption data Compliance Test Results	Leak and repair records Component inventory Calibration records	Maintain log book of inspections, and leaking components, with summary descriptions.
Recordkeeping Period	2 years	Per referencing Subpart	2 years	5 years	5 years	2 years	2 years	5 years	2 years	2 years	2 years	Per referencing Subpart (5 years)	2 years	2 years	5 years
Reporting	LDAR Performance reports semi-annually after Not. of Comp. Initial Notification Initial Notification of Compliance	LDAR Performance reports semi-annually after Not. of Comp. Initial Notification Initial Notification of Compliance	LDAR performance report semi-annually after Not. of Comp. Initial Notification Initial Notification of Compliance	LDAR Performance reports semi-annually after Not. of Comp. Initial Notification Initial Notification of Compliance	Initial notification Quarterly LDAR Performance reports 3 months after initial report	Initial report LDAR Performance reports semi-annually	LDAR Performance reports semi-annually after Not. of Comp. Initial Notification Initial Notification of Compliance	Initial notification Quarterly LDAR Performance reports 3 months after initial report	Quarterly LDAR Performance reports, including repair data	Initial report Semi-annual reports starting 6 months after initial	Initial report LDAR Performance reports semi-annually	Per referencing Subpart	LDAR Performance reports semi-annually	Quarterly LDAR Performance reports, including repair data	63 Subpart R: Quarterly 63 Subpart YY: Records only

Item of Comparison	40 CFR 63 Subpart H - SOCMI HON MACT	40 CFR 63 Subpart UU – Equipment Leaks Control Level 2	40 CFR 63 Subpart U - Polymers and Resins I, Elastomer MACT	40 CFR 63 Subparts GGG and MMM – Pharmaceuticals MACT and Pesticide Active Ingredient MACT	LAC 33:III.Chapter 51-Louisiana Refinery MACT and Louisiana Non-HON MACT With NSR Consent Decree Enhancements	40 CFR 60 Subparts VVa (SOCMI) & GGGa (Refinery)	40 CFR 63 Subpart CC - Refinery MACT Modified HON Option	LAC 33:III Chapter 51-Louisiana Refinery MACT and Louisiana Non-HON MACT	LAC 33:III.2122 Louisiana Fugitive Emission Control for Nonattainment	40 CFR 61 Subparts F, J and V and 40 CFR 63 Subpart HH – PVC, Benzene, and Oil & Natural Gas Production MACT	40 CFR 60 Subparts VV (SOCMI), GGG (Refinery) & KKK (Gas Processing Plants)	40 CFR 63 Subpart TT – Equipment Leaks Control Level 1	RCRA 40 CFR 264 Subpart BB & 40 CFR 265 Subpart BB	LAC 33:III.2121 Louisiana Fugitive Emission Control and 40 CFR 63 Subpart III	40 CFR 63 Subparts R (Gasoline Distribution) and YY (Hydrogen Fluoride Production)
Effective dates	Group I Oct 24, 1994 Oct 24, 1995 Apr 24, 1997 Group II Jan 23, 1995 Jan 23, 1996 Jul 23, 1997 Group III Apr 24, 1995 Apr 24, 1996 Oct 24, 1997 Group IV Jul 24, 1995 July 24, 1996 Dec 24, 1997 Group V Oct 23, 1995 Oct 23, 1996 Apr 23, 1997		One year after promulgation for compressors 6 months after promulgation for other equipment		Jan 1, 1995, unlessotherwise specified in Air Toxics Compliance Plan, but no later than Dec 20, 1996	Nov. 16, 2007	New Sources - upon startup Existing Sources - Phase I- Aug 18, 1998 Phase II - Aug 18, 1999 Phase III - Feb 18, 2001	Jan 1, 1995, unlessotherwise specified in Air Toxics Compliance Plan, but no later than Dec 20, 1996	Jan1, 1996	June 6, 1984 Vinyl Chloride NESHAP Oct 21, 1976	Jan 5, 1981		As required by permit		

Note: For this table –

CVS = closed vent systems; DMS = dual mechanical seal system; Gas = in gas/vapor service; HL = in heavy liquid service; Liquid = in liquid service;
LL = in light liquid service; ND = no leak is detected; PRVs = pressure relief valves/devices; PU = process unit; QIP = quality improve program;
SurgeCtrlVessel = surge control vessel; TOC = total volatil organic compounds; VRU = vapor recovery unit.

Table A-3. Recent BACT Determinations For Internal Combustion Emergency Fire Pump Engines ≤ 500 HP

Permit or RBLC ID	Permit Issuance Date	Company	Location	Unit Description	Maximum Power Output	Limit(s)	Control Option	Basis
OH-0352	06-18-13	Arcadis, US, Inc.	Lucas County, OH	Emergency Fire Pump	300 HP	NO_x – 1.7 lb/hr CO – 1.7 lb/hr PM_{10} – 0.1 lb/hr SO_2 – 0.003 lb/hr VOC – 0.25 lb/hr CO_2e – 87 ton/yr	Purchased certified to the standards in NSPS Subpart IIII	BACT-PSD
PA-0286	01-31-13	Moxie Energy, LLC	Lycoming County, PA	Fire Pump	Not Provided	NO_x – 2.6 g/HP-hr CO – 0.5 g/HP-hr PM_{10}/ $PM_{2.5}$ – 0.09 g/HP-hr VOC – 0.1 g/HP-hr	Not provided	Other Case-by-Case
IN-0158	12-03-12	St. Joseph Energy Center, LLC	St. Joseph County, IN	Diesel Fire Water Pumps	371 BHP	NO_x – 3 g/HP-hr CO – 2.6 g/HP-hr PM_{10}/ $PM_{2.5}$ – 0.15 g/HP-hr SO_2 – 0.0015% S diesel fuel VOC – 0.16 lb/hr CO_2e – 172 ton/yr	GCP, ULSD	BACT-PSD
IA-0105	10-26-12	Iowa Fertilizer Company	Lee County, IA	Fire Pump	14 gal/hr	NO_x – 3.75 g/kW-hr CO – 3.5 g/kW-hr PM_{10}/ $PM_{2.5}$ – 0.2 g/kW-hr VOC – 0.25 g/kW-hr VE – 5% CO_2e – 91 ton/yr	GCP	BACT-PSD
WY-0070	08-28-12	Black Hills Power, Inc.	Laramie County, WY	Diesel Fire Pump	327 HP	NO_x – not provided CO – not provided SO_2 – not provided	EPA Tier 3 rated, ULSD	BACT-PSD
VA-0319	08-27-12	Gateway Green Energy	Prince George County, VA	Firewater Pump	1.86 MMBtu/hr	PM_{10}/ $PM_{2.5}$ – 0.15 g/HP-hr CO_2e – 30.5 ton/yr	GCP, ULSD	BACT-PSD

Permit or RBLC ID	Permit Issuance Date	Company	Location	Unit Description	Maximum Power Output	Limit(s)	Control Option	Basis
SC-0113	02-08-12	Pyramax Ceramics, LLC	Allendale County, SC	Fire Pump	500 HP	NO_x – 4 g/kW-hr CO – 3.5 g/kW-hr SO_2 – not provided VOC – 4 g/kW-hr	Purchase of certified engine based on NSPS, Subpart IIII, ULSD, Sulfur content less than 0.0015%, operating hours less than 100 hr/yr for maintenance and testing	BACT-PSD
TX-0612	11-10-11	Lower Colorado River Authority	Llano County, TX	Diesel Fire Water Pumps	617 HP	CO_2e – 7027.8 lb/hr	Best work practice	BACT-PSD
LA-0254	08-16-11	Entergy Louisiana, LLC	Jefferson Parish, LA	Emergency Fire Pump	350 HP	CO – 2.6 g/HP-hr PM_{10}/ $PM_{2.5}$ – 0.15 g/HP-hr VOC – 1 g/HP-hr	ULSD, GCP	BACT-PSD
CA-1192	06-21-11	Avenal Power Center, LLC	Kings County, CA	Emergency Firewater Pump	288 HP	NO_x – 3.4 g/HP-hr CO – 0.447 g/HP-hr PM_{10} – not provided	Equipped with a turbocharger and an intercooler/ aftercooler, ULSF not to exceed 15 ppmvd fuel sulfur, operational limit of 50 hr/yr	BACT-PSD
LA-0251	04-26-11	Flopam, Inc.	Iberville Parish, LA	Fire Pump	444 HP	NO_x – 5.82 lb/hr CO – 0.65 lb/hr PM_{10} – 0.01 lb/hr	GCP	BACT-PSD
FL-0322	12-23-10	Southeast Renewable Fuels (SRF), LLC	Hendry County, FL	Emergency Diesel Fire Pump	Not Provided	CO – 2.6 g/HP-hr PM – 0.15 g/HP-hr	Not provided	BACT-PSD

Permit or RBLC ID	Permit Issuance Date	Company	Location	Unit Description	Maximum Power Output	Limit(s)	Control Option	Basis
MI-0399	12-21-10	Detroit Edison	Monroe County, MI	Diesel Quench Pump	252 HP	NO_x – 7.8 g/HP-hr CO – 2.6 g/HP-hr $PM_{10}/PM_{2.5}$ – 0.4 g/HP-hr VE – 20% opacity	GCP	BACT-PSD, Each – Test Protocol
NH-0018	07-26-10	Laidlaw Berlin BioPower, LLC	Coos County, NH	Fire Pump	2.27 MMBtu/hr	PM_F – 0.3e-5 lb/MMBtu	Not provided	MACT
ID-0018	06-25-10	Idaho Power Company	Payette County, ID	Fire Pump	235 kW	NO_x – 4 g/kW-hr CO – not provided PM – 0.2 g/kW-hr VOC – 4 g/kW-hr	Tier 3 engine-based	BACT-PSD
CA-1191	03-11-10	City of Victorville	San Bernardino County, CA	Emergency Firewater Pump	135 kW	NO_x – 3.8 g/kW-hr CO – 3.5 g/kW-hr $PM_{2.5}$ – 0.2 g/kW-hr	Operational restriction of 50 hr/yr, operate as required for fire safety testing	BACT-PSD
MI-0389	12-29-09	Consumers Energy	Bay County, MI	Fire Pump	525 HP	CO – 2.6 g/HP-hr PM_{10} – 0.31 lb/MMBtu	Engine design and operation 15 ppm sulfur fuel	BACT-PSD
				Fire Booster Pump	40 kW	CO – 5 g/kW-hr PM_{10} – 0.31 lb/MMBtu	Engine design and operation 15 ppm sulfur fuel	BACT-PSD
OK-0129	01-23-09	Associated Electric Cooperative, Inc.	Mayes County, OK	Emergency Diesel Fire Pump	267 HP	NO_x – 4.59 lb/hr CO – 2.6 g/HP-hr PM_{10} – 0.24 lb/hr SO_2 – 0.11 lb/hr VOC – 0.66 lb/hr	GCP, LSDF	BACT-PSD
OH-0317	11-20-08	Ohio River Clean Fuels, LLC	Columbiana County, OH	Fire Pump	300 HP	NO_x – 4.89 lb/hr CO – 1.72 lb/hr PM_{10} – 0.27 lb/hr VOC – 0.26 lb/hr VE – 20%	GCP, Turbocharger, Low temperature aftercooler	BACT-PSD

Permit or RBLC ID	Permit Issuance Date	Company	Location	Unit Description	Maximum Power Output	Limit(s)	Control Option	Basis
MD-0040	11-12-08	Competitive Power Ventures, Inc./CPV Maryland, LLC	Charles County, MD	Emergency Firewater Pump	300 HP	NO_x – 3 g/HP-hr CO – 2.6 g/HP-hr $PM_{10}/PM_{2.5}$ – 0.15 g/HP-hr SO_2 – not provided VOC – 0.66 lb/hr	Not provided	BACT-PSD
FL-0304	09-08-08	Florida Municipal Power Agency (FMPA)	Osceola County, FL	Emergency Fire Pump	> 300 HP	NO_X – 3 g/bhp-hr CO – 2.6 g/bhp-hr PM – 0.15 g/bhp-hr	Not provided	BACT-PSD
LA-0224	03-20-08	Southwest Electric Power Co.	Caddo Parish, LA	Diesel Fire Pump	310 HP	NO_x – 9.61 lb/hr CO – 2.07 lb/hr PM_{10} – 0.68 lb/hr SO_2 – 0.64 lb/hr VOC – 0.77 lb/hr	Low-Sulfur fuel, limited operation hours, and proper engine maintenance	BACT-PSD
MN-0070	09-07-07	Minnesota Steel Industries, LLC	Itasca County, MN	Diesel Fire Water Pumps	Not Provided	SO_2 – 0.05% in fuel VE – 5%	Limited Sulfur in fuel, limited hours	BACT-PSD
CA-1144	04-25-07	Caithness Blythe II, LLC	Riverside County, CA	Fire Pump	303 HP	NO_x – 7.5 lb/hr CO – 0.7 lb/hr PM_{10} – 0.1 lb/hr	Fuel with less than 0.05% sulfur by weight	BACT-PSD
IA-0084	11-30-06	ADM Corn Processing	Clinton County, IA	Fire Pump Engine	500 HP	VOC – 3 g/HP-hr	GCP	BACT-PSD
NC-0101	09-29-05	Forsyth Energy Projects, LLC	Forsyth County, NC	Emergency Firewater Pump	11.40 MMBtu/hr	NO_x – 36.48 lb/hr CO – 9.69 lb/hr PM_{10} – 1.14 lb/hr SO_2 – 0.58 lb/hr VOC – 1.04 lb/hr	Emergency use only	BACT-PSD
LA-0192	06-06-05	Cresent City Power, LLC	Orleans County, LA	Firewater Pump	425 HP	NO_x – 8.9 lb/hr CO – 1.88 lb/hr PM_{10} – 0.14 lb/hr SO_2 – 0.61 lb/hr VOC – 0.05 lb/hr	Good engine design and proper operating practices	BACT-PSD

Permit or RBLC ID	Permit Issuance Date	Company	Location	Unit Description	Maximum Power Output	Limit(s)	Control Option	Basis
OH-0252	12-28-04	Duke Energy Hanging Rock ,LLC	Lawrence County, OH	Firewater Pump	265 HP	NO_x – 8.2 lb/hr CO – 1.8 lb/hr PM – 0.66 lb/hr SO_2 – 0.10 lb/hr VOC – 0.66 lb/hr	500 hr/yr	BACT-PSD

Crude Oil Speciation Summary

Annual Emissions

Un-Heated		Losses(lbs)												
Components	CAS #	RVP 0.98	RVP 3.25	RVP 3.27	RVP 3.59	RVP 3.96	RVP 8.41	Bakken 423	Bakken 430	Bakken 413	Bakken 413 11psi	Max	Max case	Max 80% Bakken 20% Other
Crude oil		4,462.70	4,665.66	4,270.00	4,182.34	4,760.18	5,119.85	5,565.87	4,583.12	5,067.80	7,591.59	7,591.59	Bakken 413 11psi	7,097.24
Hexane	110-54-3	23	23	22	21	23	22	-	-	96	109	108.61	Bakken 413 11psi	91.53
Benzene	71-43-2	13	13	12	12	13	12	-	-	10	11	13.10	RVP 0.98	11.44
Isooctane	540-84-1	5	5	4	4	5	4	-	-	-	-	4.83	RVP 0.98	0.97
Toluene	108-88-3	19	19	18	17	19	17	-	-	16	16	19.49	RVP 0.98	16.70
Ethylbenzene	100-41-4	4	4	4	4	4	4	-	-	4	4	4.48	RVP 0.98	4.29
Xylene (-m)	108-38-3	17	16	15	14	16	14	-	-	14	14	16.56	RVP 0.98	14.34
Isopropyl benzene	98-82-8	4	4	4	4	4	4	-	-	-	-	4.44	RVP 0.98	0.89
1,2,4-Trimethylbenzene	95-63-6	15	14	13	13	14	13	-	-	-	-	14.61	RVP 0.98	2.92
Cyclohexane	110-82-7	37	37	34	33	37	34	-	-	23	25	36.92	RVP 3.96	27.73
Unidentified Components		4,325.16	4,528.63	4,144.00	4,059.86	4,623.05	4,995.48	5,225.41	4,202.03	4,564.89	6,982.03	6,982.03	Bakken 413 11psi	6,584.72
Isopentane	78-78-4	0.00	0.00	0.00	0.00	0.00	0.00	108	181	121	158	181.12	Bakken 430	144.90
Pentane	109-66-0	0.00	0.00	0.00	0.00	0.00	0.00	184	186	190	241	241.02	Bakken 413 11psi	192.82
Cyclopentane	287-92-3	0.00	0.00	0.00	0.00	0.00	0.00	18	14	12	15	18.41	Bakken 423	14.73
Xylene (-p)	106-42-3	0.00	0.00	0.00	0.00	0.00	0.00	0.00	0.00	9	9	8.65	Bakken 413 11psi	6.92
Xylene (-o)	95-47-6	0.00	0.00	0.00	0.00	0.00	0.00	0.00	0.00	8	8	7.76	Bakken 413 11psi	6.21

Heated		Losses(lbs)				
Components	CAS #	RVP 0.98	RVP 3.25	RVP 3.96	Max	Max case
Crude oil		4,788	6,600	7,539	7,539	RVP 3.96
Hexane (-n)	110-54-3	64	79	88	88	RVP 3.96
Benzene	71-43-2	74	90	99	99	RVP 3.96
2,2,4-Trimethylpentane (isooctane)	540-84-1	9	10	11	11	RVP 3.96
Toluene	108-88-3	72	81	87	87	RVP 3.96
Ethylbenzene	100-41-4	22	24	24	24	RVP 3.96
Xylene (-m)	108-38-3	75	79	82	82	RVP 3.96
Isopropyl benzene	98-82-8	5	5	5	5	RVP 3.96
1,2,4-Trimethylbenzene	95-63-6	15	15	16	16	RVP 3.96
Cyclohexane	110-82-7	86	104	114	114	RVP 3.96
Unidentified Components		4,366	6,113	7,014	7,014	RVP 3.96
Isopentane	78-78-4	-	-	-	-	-
Pentane (-n)	109-66-0	-	-	-	-	-
Cyclopentane	287-92-3	-	-	-	-	-
Xylene (-p)	106-42-3	-	-	-	-	-
Xylene (-o)	95-47-6	-	-	-	-	-

Unloading Area Boiler Emissions

Maximum hourly heat input:	61.745	MMBtu/hr	3	Total Boilers
Maximum annual heat input	754,960	MMBtu/yr	3	Active on a short-term basis
Assumed heating value of natural gas	1,000	Btu/scf	2	Active on an annual basis
Maximum annual gas usage rate	755.0	MMscf/yr		

Emission factors

Pollutant	Emission Factor (lb/MMBtu)	Basis
NO_X	0.0110	Low NO_X burner, BACT
CO	0.036	Proper combustion, BACT
SO_2	0.00725	2.59 gr S/100 scf NG daily max plus 25% saftey factor
SO_2	0.00367	1.31 gr S/100 scf NG annual average plus 25% saftey factor
PM_{10}	0.0075	BACT
$PM_{2.5}$	0.0075	Assumed equal to PM_{10}, BACT
VOC	0.005	Proper combustion, BACT
CO2e	117	

Emission calulations

Averging Period	Units	NO_X	CO	SO_2	PM_{10}	$PM_{2.5}$	VOC	CO2e
1-Hour	lb/hr	2.038	6.67	1.343	1.389	1.389	0.926	21,672.5
24-hour	lb/day	48.902	160.04	32.222	33.342	33.342	22.228	520,139.9
Annual[1]	tpy	4.152	13.59	1.386	2.831	2.831	1.887	44,165.2

VCU Inerting Gas Air Calculations and VOC Profile Claculations

A theoretical profile of the fraction of VOC in the gases displaced while loading ships.

Figure 4 - concentration of hydrocarbon in vent gas as a function of % loaded (Courtesy John Zink Ltd)

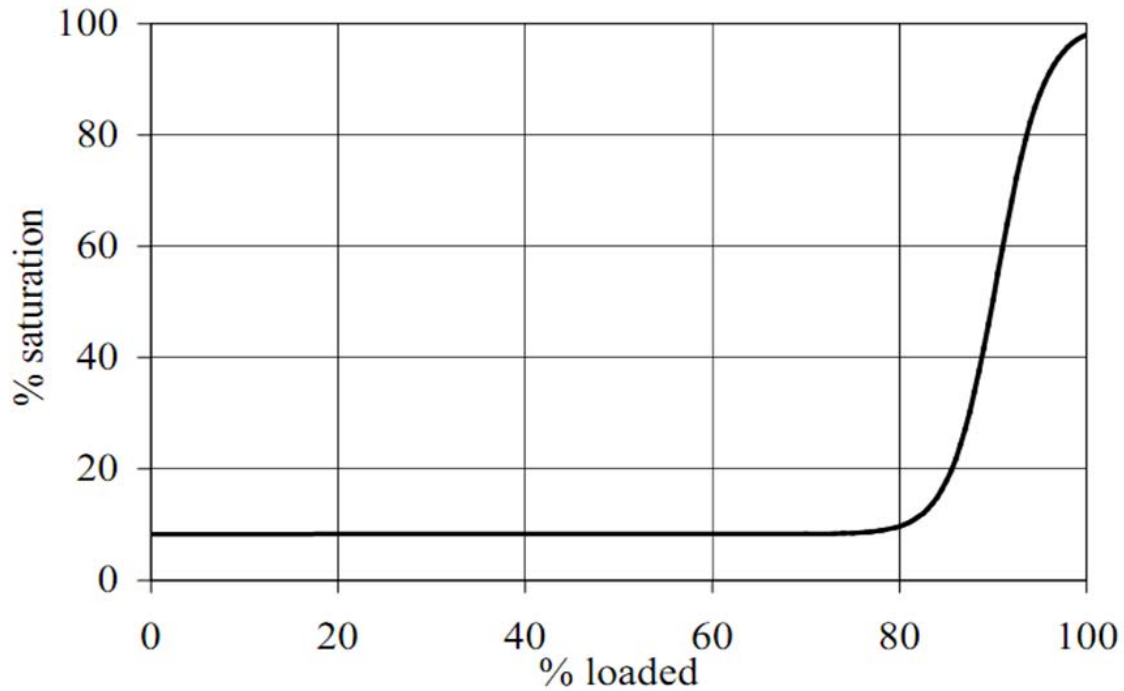

20% VOC content required to stop assist gas
85% fraction of time that assist gas will be used (based on figure above)

VOC Profiles

	Jordan	90% air	50% air	Average Air %
Methane	1.41%	0.25%	1.23%	0.44%
Ethane	10.87%	1.90%	9.52%	3.43%
Propane	30.64%	5.37%	26.83%	9.66%
Butane	11.66%	2.04%	10.21%	3.68%
Pentane	2.09%	0.37%	1.83%	0.66%
Hexane	0.35%	0.06%	0.31%	0.11%
Heptane	0.08%	0.01%	0.07%	0.03%
Air	42.90%	90%	50%	82.00%
Total	100.00%	100.00%	100.00%	100.00%

Assuming the VOC concentration profile provided by Jordan would hold for other VOC/air combinations, concentration and heating value profiles for 90% air and 50% air profiles. These profiles were used to construct an approximation of the tank filling profile: 0% to 80% filled - constant 90% air, 80% to 100% filled - average of 50% air.

Inerting Gas Calculations

Estimated that the "air" portion of the displaced gases are actually ship exhaust, and that 12% of that gas is CO_2. Using the assumption that during 80% of the loading operation, the displaced gases were 90% "air," and an average of 50% "air" during the last 20% of the loading operation:

Fraction of the displaced gases assumed to be ship exhaust: 82%

			hourly max	
Total daily volume displaced	2,021,231	cf/day	179,665	cf/hr
Fraction that is ship exhaust	82%		82%	
Daily volume of ship exhaust emitted	1,657,409	cf/day	147,325	cf/hr
Assumed CO_2 fraction of ship exhaust	12%		12%	
Daily volume of CO_2 emitted	198,889	cf/day	17,679	cf/hr

Use ideal gas law to convert the volume of CO_2 to a mass:

m = MPV/RuT

V	5,632	m3 CO_2/day	500.61	m3 CO_2/hr
M	44	kg/kmol	44	kg/kmol
P	101.325	kPa	101.325	kPa
Ru	8.314	kJ/kmolK	8.314	kJ/kmolK
T	293.15	K	293.15	K
m	10,302	kg/day	915.7	kg/hr

Additional mass of CO_2 attributable to the inerting gas present in the tanks:

4,145	tons CO_2/yr	22,712	lbs CO_2/day	2,019	lbs CO_2/hr

Note: For a more conservaitve estimate of the quantity of inerting gas, the fraction of "air" in the displaced gases was assumed to be greater than when calculating the quantity of VOCs in the displaced gases.

VCU Emissions Summary

Displaced Tank Loading Vapors

Hourly

32,000	bbl/hr (maximum hourly)	768000	bbl/day	max daily
1,344,000	gal/hr (maximum hourly)			
179,665	ft3/hr (maximum hourly)			
144.2	MMBtu/hr (maximum hourly)			

Daily/Annual

360,000	bbl/day (annual average)	0.46875	fraction of max daily	
15,120,000	gal/day	131400000	bbl/yr	
2,021,231	ft3/day	100	ppm H_2S in vapor (maximum)	
67.6	MMBtu/hr	0.01%	H_2S in vapor	
1,622	MMBtu/day	PV=mRuT/M		
24	hours/day	m= PVM/RuT		
84,218	ft3/hr	P	0.987	atm
365	days/year	Ru	1.31443	ft^3*atm/lb-mol/K
591,959	MMBtu/yr	T	286	K (SO_2 MW)
737,749,295	ft3/yr	M	64	lb/lb-mol

Emissions from Displaced Vapor Combustion

Pollutant	Emission factor (lb/MMBtu)	Emissions (lb/hr)	Emissions (lb/day)	Emissions (tons/year)
NO_X	0.023	3.32	79.6	6.81
CO	0.010	1.44	34.6	2.96
SO_2	-	3.02	72.5	6.20
PM_{10}	0.0075	1.08	25.9	2.22
$PM_{2.5}$	0.0075	1.08	25.9	2.22
VOC	-	4.21	101.0	8.64
CO_2e	136	19,548	469,156	40,135

VCU Emissions Summary (continued)

Assist gas

30,600	cf/hr	(natural gas)	
292,613	cf/day		85% assist gas usage (annual)
106,803,563	cf/yr		
1,000	Btu/cf	(heating value of gas)	
30.6	MMBtu/hr		
293	MMBtu/day		
106,804	MMBtu/yr		
106,803,563	cf/yr		

Emissions from Assist Gas Combustion

Pollutant	Emission factor (lb/MMBtu)	Emissions (lb/hr)	Emissions (lb/day)	Emissions (tons/year)
NO_X	0.023	0.704	6.73	1.23
CO	0.010	0.306	2.93	0.534
SO_2	0.00725	0.222	2.12	0.387
PM_{10}	0.0075	0.230	2.19	0.401
$PM_{2.5}$	0.0075	0.230	2.19	0.401
VOC	0	0	0	0
CO_2e	117	3,580	34,236	6,248

CO_2e Emissions from Inerting Gas	
4,145	tons per year of CO_2
22,712	lbs CO_2 / day
2,019	lbs CO_2 / hr (max)

Total

Pollutant	Emission factor (lb/MMBtu)	Emissions (lb/hr)	Emissions (lb/day)	Emissions (tons/year)
NO_X	-	4.02	86.3	8.04
CO	-	1.75	37.5	3.49
SO_2	-	3.24	74.6	6.59
PM_{10}	-	1.31	28.1	2.62
$PM_{2.5}$	-	1.31	28.1	2.62
VOC	-	4.21	101	8.64
CO_2e	-	25,147	526,104	50,528

Calculated Tank Loading Vapor Displacment Rate

Hourly worst case airflow	179,665 scf/hr
Daily/Annual Average Airflow	84,218 scf/hr
MVCU Control Efficiency	99.8%

Ideal Gas Law

PVM=mRuT --> V=mRuT/PM --> m=PVM/RuT

T =	293.15	K
P =	1	atm
Ru=	1.314	atm-ft^3/lbmol-K

VOC Profile from Jordan Technologies

	As Provided	Extrapolated[a]
Methane	1.41%	0.79%
Ethane	10.87%	6.09%
Propane	30.64%	17.17%
Butane	11.66%	6.53%
Pentane	2.09%	1.17%
Hexane	0.35%	0.20%
Heptane	0.08%	0.04%
Air	42.90%	68.00%
Total	100.00%	100.00%

Compound	MW (lb/lb-mol)	68% Air Condition Vol %	lb-mol/hr (shortterm)	lb-mol/hr (long term)	Heat of combustion[b] KJ/kg	Heat of combustion[c] Btu/lbmol	Mixture Btu/lbmol
Methane	16	0.790	3.69	1.73	55,530	381,986	3018.4
Ethane	30	6.092	28.41	13.32	51,900	669,404	40778.6
Propane	44	17.171	80.09	37.54	50,330	952,093	163486.5
i-Butane	58	6.535	30.48	14.29	49,150	1,225,607	80087.3
n-Pentane	72	1.171	5.46	2.56	47,760	1,478,416	17316.4
n-Hexane	86	0.196	0.91	0.43	47,760	1,765,885	3463.7
n-Heptane	100	0.045	0.21	0.10	48,100	2,067,973	927.1
Air	28.97	68	317.17	148.67	--	--	--
			Short Term	***Long Term***		**Total**	**309,078**
Flowrate	lb-mol/hr		466	219			
Startup Heat Input Rate	MMBtu/hr		144	68			
Carbon	(lb-mol C/hr)		457	214			
CO2 From Carbon	(lb CO2/hr)		20,106	9,425			
VOC to Combustor	lb C/hr		1406	659			
lb/MMBtu			0.0195	0.0195			

Notes:

a - Based on information provided by the MVCU manufacturer, the hydrocarbon content of the displaced vapors was assumed to average 32 percent by volume over all loading operations.

b - Higher Heat Values from at 25C (Table A-27). Thermodynamics an Engineering Approach (4th edition) by Y.A. Cengel and M.A. Boles, McGraw-Hill, New York, 2002.

c - Converted Heat of Combustion (KJ/Kg) to (Btu/lb)

CO2e From Displaced Vapor Combustion

Loading Crude Oil Into Ships and Ocean Barges
AP-42 Section 5.2 (Transporation and Marketing of Petroleum Liquids

CL = total loading loss (lb/1000 gal loaded)
Ca = 0.86 (Arrival EF, From AP-42, Table 5.2-3 - assume previous cargo was volatile and tank arrived uncleaned)
Cg = 1.84 (0.44*P -0.42) * (M*G)/T
where
P = true vapor pressure, psia
M = molecular weight of vapors
G = vapor growth factor = 1.02
T = temperature of liquid, degrees F = 68, degrees R = 527.67 °R

$$C_L = C_a + C_g = 0.86 + \left(1.84 * (0.44 * \mathrm{P} - 0.42) * \frac{M * G}{T}\right)$$

	P (psia)	M (lb/lb-mole)	CL (lb/1000 gal)	Throughput (bbl/hr)	Throughput (bbl/day)	PTE (lb/hr)	PTE (lb/day)	PTE (ton/yr)	Control Efficiency	PTE, controlled (lb/hr)	PTE, controlled (lb/day)	PTE, controlled (ton/yr)	Combusted (tpy)	CO2e (tpy)
Crude oil	11	44.8630473	1.5653	32,000	360,000	2,104	23,667	4,319	99.8%	4.21	47.3	8.64	4,311	12,944

Crude Oil Storage Tank Emissions

Tanks Operating Information	
6	Tanks
360,000	tank capacity (bbl)
15,120,000	tank capacity (gallons)
340,000	bbl/day (working volume)
20,683,333	bbl/yr/tank
868,700,000	gal/yr/tank
24	hours/day
365	days/year

Assumptions

5000	ppm H2S
50	Vapor molecular weight of crude
34	molecular weight of H2S

Components	CAS #	Annual Losses (lbs) *Per unheated ta*	Annual Losses (lbs) *Per heated tank*	Hourly Losses (lbs/hr) *Total*	Daily Losses (lbs/day) *Total*	Annual Losses (lbs/yr) *Total*
Crude oil		7,097.24	7,539.07	4.96E+00	1.19E+02	4.35E+04
Hexane	110-54-3	91.53	87.69	6.18E-02	1.48E+00	5.42E+02
Benzene	71-43-2	11.44	41.08	1.46E-02	3.50E-01	1.28E+02
Isooctane	540-84-1	0.97	10.97	2.95E-03	7.07E-02	2.58E+01
Toluene	108-88-3	16.70	36.38	1.59E-02	3.82E-01	1.40E+02
Ethylbenzene	100-41-4	4.29	6.12	3.36E-03	8.05E-02	2.94E+01
Xylene (-m)	108-38-3	14.34	21.64	1.15E-02	2.76E-01	1.01E+02
Isopropyl benzene	98-82-8	0.89	5.23	1.60E-03	3.84E-02	1.40E+01
1,2,4-Trimethylbenzene	95-63-6	2.92	15.66	4.91E-03	1.18E-01	4.30E+01
Cyclohexane	110-82-7	27.73	114.30	3.88E-02	9.30E-01	3.40E+02
Unidentified Components		6,584.72	7,199.99	4.65E+00	1.12E+02	4.07E+04
Isopentane	78-78-4	144.90	0.00	6.62E-02	1.59E+00	5.80E+02
Pentane	109-66-0	192.82	0.00	8.80E-02	2.11E+00	7.71E+02
Cyclopentane	287-92-3	14.73	0.00	6.73E-03	1.61E-01	5.89E+01
Xylene (-p)	106-42-3	6.92	0.00	3.16E-03	7.58E-02	2.77E+01
Xylene (-o)	95-47-6	6.21	0.00	2.83E-03	6.80E-02	2.48E+01
Hydrogen Sulfide	7783-06-4	22.39	24.48	1.58E-02	3.79E-01	1.39E+02

Methane Emissions

Note: While crude oil that reaches the facility will likely be stabalized, it can be considered unstabilized for conservative CH4 emissions estimations. CH4 emissions were estimated using equation Y-22 from Federal GHGMRR 40 CFR 98 Y - Petroleum Refineries.

EQ Y-22:
CH4 = (0.1 * Qref)
where
CH4 = Annual methane emissions from storage tanks (metric tons/year)
Qref = Quantity of crude oil (MMbbl/year)

12.41	**Tons of Methane per year (total)**	2.068333333	per tank
260.61	**Tons of CO2e per year (total)**	43.435	per tank

Emergency Diesel Firewater Pumps Emission Calculations

Operating Information					
225	hp	167.8	kw/hr	1.6214	MMBtu/hr
12.1	gal/hr	134,000	BTU/gal		
34	hours/year				
1	hr/day				
3	Engines				

SO2 Calcs

15	ppm S (ULSD)
7	lb/gal (density of diesel fuel)
84.7	lb/hr (mass fuel use rate)
0.00127	lb/hr S
32	lb/lbmol (MW of S)
64	lb/lbmol (MW of SO2)
0.002541	lb/hr SO2

Emissions

Pollutant	Emission factor (g/kW-hr)	Emission Factor Description	Emissions (lb/hr)	Emissions (lb/day)	Emissions (tons/year)	*Single Engine* Emissions (lb/hr)	Emissions (lb/day)	Emissions (tons/year)
NO_X	0.335	Manufacturer	0.372	0.372	0.00632	0.124	0.124	0.00211
CO	1.60	Manufacturer	1.78	1.78	0.0302	0.592	0.592	0.0101
SO_2	-	15 ppm ULSD fuel	0.00762	0.00762	0.000130	0.00254	0.00254	0.0000432
PM_{10}	0.17	Manufacturer	0.189	0.189	0.00321	0.0629	0.0629	0.00107
$PM_{2.5}$	0.17	Manufacturer	0.189	0.189	0.00321	0.0629	0.0629	0.00107
VOC	0.37	Manufacturer	0.411	0.411	0.00698	0.137	0.137	0.00233
CO2e	717.13	40 CFR Part 98	796	796	13.5	265	265	4.51

CO2 Emission Factor Conversion From 40 CFR Part 98							
74.21	kg/MMBtu	163.6	lb/MMBtu	74209	g/Mmbtu	717.1	g/kw-hr

Fugitive Emissions due to Leaking Components

Summary of Fugitive Components by Type

Components Distribution

Fugitive Component Type	Service	Total Number of Components	Number of Components Estimated to be Leakers (1.5% of Total)	Number of Components Estimated to be Pegged Leakers	Unloading Area Components	Tank Area Components	Dock Area Components
Valves	All	2,753	42	1	2,050	509	194
Pump Seals	All	61	1	1	50	10	1
Connectors	All	360	6	1	270	90	0
Flanges	All	2,630	40	1	2,253	316	61
Others	All	1,486	23	1	1,185	172	129

Summary of Fugitive Component Emission Factors

Fugitive Component Type	Service	Non-Leakers		Screening Value Leakers				Pegged Leakers	
		Zero Emission Factor (lb/hr/source)	Non-Leaking Hours (hr/yr)	Leak Rate/Screening Correlation	Screening Value (SV) (ppmv)	Screening Value Emission Factor (lb/hr/source)	Screening Value Leaking Hours (hr/yr)	10,000 ppmv Pegged Emission Factor (lb/hr/source)	Pegged Leaking Hours (hr/yr)
Valves	All	1.7E-05	8,760	(kg/hr/source) = 2.29E-06 x $(SV)^{0.746}$	250	0.00031	8,760	0.14112	730
Pump Seals	All	5.3E-05	8,760	(kg/hr/source) = 5.03E-05 x $(SV)^{0.610}$	1,000	0.00750	8,760	0.16317	730
Connectors	All	1.7E-05	8,760	(kg/hr/source) = 1.53E-06 x $(SV)^{0.735}$	250	0.00020	8,760	0.06174	730
Flanges	All	6.8E-07	8,760	(kg/hr/source) = 4.61E-06 x $(SV)^{0.703}$	250	0.00049	8,760	0.18743	730
Others	All	8.8E-06	8,760	(kg/hr/source) = 1.36E-05 x $(SV)^{0.589}$	250	0.00078	8,760	0.16097	730

Summary of Fugitive Component Emissions

Emissions Distribution

Fugitive Component Type	Service	Non-Leaker Emissions (lb/yr)	Screening Value Leaker Emissions (lb/yr)	Pegged Leaker Emissions (lb/yr)	Total Emissions (lb/yr)	Total Emissions (ton/yr)	Unloading Area Emissions (ton/yr)	Tank Area Emissions (ton/yr)	Dock Area Emissions (ton/yr)
Valves	All	408.45	114.02	103.02	625.49	0.31	0.233	0.058	0.022
Pump Seals	All	27.81	65.69	119.11	212.62	0.11	0.087	0.017	0.002
Connectors	All	51.28	10.26	45.07	106.62	0.05	0.040	0.013	0.000
Flanges	All	15.51	172.75	136.82	325.08	0.16	0.139	0.020	0.004
Others	All	113.04	143.15	117.50	373.69	0.19	0.149	0.022	0.016
Total		**616.09**	**505.87**	**521.53**	**1,643.49**	**0.82**	**0.65**	**0.13**	**0.04**

Fugitive Emissions due to Leaking Components (continued)

Summary of Toxic Emissions

Pollutant	CAS #	Weight Fraction	Hourly Emissions (lb/hr)	Total Emissions (ton/yr)	Emissions Distribution: Unloading Area Emissions (ton/yr)	Emissions Distribution: Tank Area Emissions (ton/yr)	Emissions Distribution: Dock Area Emissions (ton/yr)
1,2,4-Trimethylbenzene	95-63-6	0.00065	1.2E-04	0.0005	0.0004	0.0001	0.0000
Benzene	71-43-2	0.00219	4.1E-04	0.0018	0.0014	0.0003	0.0001
Cyclohexane	110-82-7	0.00534	1.0E-03	0.0044	0.0035	0.0007	0.0002
Cyclopentane	287-92-3	0.00265	5.0E-04	0.0022	0.0017	0.0003	0.0001
Ethylbenzene	100-41-4	0.00087	1.6E-04	0.0007	0.0006	0.0001	0.0000
Hexane (-n)	110-54-3	0.01622	3.0E-03	0.0133	0.0105	0.0021	0.0007
Hydrogen Sulfide	7783-06-4	0.00735	1.4E-03	0.0060	0.0048	0.0010	0.0003
Isooctane	540-84-1	0.00022	4.1E-05	0.0002	0.0001	0.0000	0.0000
Isopentane	78-78-4	0.03162	5.9E-03	0.0260	0.0205	0.0041	0.0014
Isopropyl benzene	98-82-8	0.00020	3.7E-05	0.0002	0.0001	0.0000	0.0000
Pentane	109-66-0	0.03241	6.1E-03	0.0266	0.0210	0.0042	0.0014
Toluene	108-88-3	0.00334	6.3E-04	0.0027	0.0022	0.0004	0.0001
Xylene (-m)	108-38-3	0.00291	5.5E-04	0.0024	0.0019	0.0004	0.0001
Xylene (-o)	95-47-6	0.00122	2.3E-04	0.0010	0.0008	0.0002	0.0001
Xylene (-p)	106-42-3	0.00136	2.6E-04	0.0011	0.0009	0.0002	0.0001

Notes:

Non-Leaker Emissions = Petroleum Zero Emission Factor x (Total Number of Components - Number of Components Estimated to be Leakers) x Non-Leaking Hours

Screening Value Leaker Emissions = Petroleum Screening Value Emission Factor x [Number of Components Estimated to be Leakers - (Number of Components Estimated to be Pegged Leakers x Pegged Leaking Hours / 8,760)] x Screening Value Leaking Hours

Pegged Leaker Emissions = 10,000 ppmv Petroleum Pegged Emission Factor x Number of Components Estimated to be Pegged Leakers x Pegged Leaking Hours

CO2e Emissions	
0.904	Ratio of lowest molecular weight pollutant (cyclopentane) emissions from components to emissions from tanks
235.627	Tons CO2e per year from components (scaled from tanks emissions)

Emissions Estimation Basis

The key assumptions for this calculation are:

1) Each component in VOC service will be included in a leak detection and repair (LDAR) program requiring weekly visual inpsections and monthly inspections with portable instrument.

2) 1.5% of the total components in VOC service are assumed to be leakers.

3) The screening values are assumed to be one half the Phase II regulatory leak definition (2,000 ppm [pumps] and 500 ppm [valves, connectors, instrumentation, pressure valves], 40 CFR 63, Subpart H), which is considered BACT for this project.

4) The durations of pegged leakers for the remaining equipment types are assumed to be one month for all equipment.

5) Toxic emissions are based on the average composition of TAPs in crude oil.

6) Component counts for valves, pumps, connectors, flanges, and others were provided by Savage.

7) Zero emission rates, screening correlation equations, and pegged emission rates are from Tables 2-12, 2-10, and 2-14 (Petroleum Industries), Protocol for Equipment Leak Emission Estimates (EPA, November 1995).

Vapor Pressure and Liquid Density Values

Vapor Pressure Constants[1]

$$A = 12.82 - 0.962 \times \ln(RVP)$$

$$B = 7261 - 1216 \times \ln(RVP)$$

True Stock Vapor Pressure Equation (from AP42, Clausius-Clapeyron derivation)[1]

$$P = exp \;\; A - \frac{B}{(T + 459.7)}$$

True Stock Vapor Pressure (psi at 55.06°F) at Given RVP

RVP (psi)	0.98	3.25	3.27	3.59	3.96	6.1	8.05	8.41	9.8	13.9
Vapor Pressure (psi)	0.269	1.44	1.45	1.66	1.90	3.48	5.13	5.45	6.76	11.0

Liquid Density at Given RVP and Specific Gravity

RVP (psi)	**0.98**	**3.25**	**3.27**	**3.59**	**3.96**	**6.1**	**8.05**	**8.41**	**9.8**[2]
Specific Gravity (at 60°F)	0.937	0.929	0.844	0.816	0.928	0.811	0.819	0.811	0.814
Liquid Density (lb/gal at 60°F)	7.81	7.74	7.04	6.80	7.73	6.76	6.83	6.76	6.79

[1] Manual of Petroleum Measurement Standards Chapter 19.4 – Recommended Practice for Speciation of Evaporative Losses, second edition, September 2005
[2] Due to limited information, the specific gravity and liquid density associated with the 9.8 RVP was used for the 13.9 RVP tank run

TANKS 4.0.9d

Tank Parameters and Speciation Profiles for Bakkens

Tank Parameters	
Diameter (ft)	240
Volume (gal)	14,357,570
Turnovers per year	64.063766
Net Throughput (gal/yr)	919,800,000
Number of Columns	25
Effective Column Diameter	0.9
External Shell and Roof Color	White

Speciation Profiles for Bakken 423 and Bakken 430		
Pollutant	**Bakken 423 – Percent of Total Liquid Weight**	**Bakken 430 – Percent of Total Liquid Weight**
Isopentane	0.81	1.512
Pentane (-n)	1.781	1.977
Cyclopentane	0.236	0.198

Speciation Profiles for Bakken 413 and Bakken 413 at 11 psi	
Pollutant	**Percent of Total Liquid Weight**
Isopentane	0.96
Pentane (-n)	1.93
Cyclopentane	0.16
Benzene	0.209
Cyclohexane	0.477
Ethylbenzene	0.107
Xylene (-p)	0.219
Xylene (-m)	0.35
Xylene (-o)	0.198
Hexane (-n)	1.749
Toluene	0.378

Un-heated Tanks Summary

The following tank parameters and speciation profiles were used for the un-heated tanks (RVP 0.98, 3.25, 3.27, 3.59, 3.96 and 8.41). The average annual stock temperature input of 55.0606°F was used for the un-heated tanks. Weight fractions for the following pollutants were revised: benzene, toluene, ethylbenzene, and xylene (-m).

Tank Parameters	
Diameter (ft)	240
Volume (gal)	14,357,570
Turnovers per year	64.063766
Net Throughput (gal/yr)	919,800,000
Number of Columns	25
Effective Column Diameter	0.9
External Shell and Roof Color	White

Speciation Profiles for RVP 0.98, 3.25, 3.27, 3.59, 3.96 and 8.41		
Pollutant	**Weight Fraction of Component**	**Vapor Pressure at 55.0606°F**
Hexane (-n)	0.4	1.68
Benzene	0.25	1.02
Isooctane	0.1	0.52
Toluene	0.42	0.28
Ethylbenzene	0.1	0.09
Xylene (-m)	0.37	0.08
Isopropyl benzene	0.1	0.04
1,2,4-Trimethylbenzene	0.33	0.02
Cyclohexane	0.7	1.06

Heated Tanks Summary

The following tank parameters and speciation profiles were used for the heated tanks (RVP 0.98, 3.25, and 3.96). The average annual stock temperature input of 55.0606°F was changed to 150°F for the tanks that are heated. In addition, the vapor pressure calculation for each pollutant was adjusted with the new average liquid temperature of 150°F. Pollutant weight fractions were the defaults provided for crude oil in TANKS, except for benzene, toluene, ethylbenzene, and xylene (-m), which are the maximum 5-year average weight fractions for the worst-case heavy sour crudes from CrudeMonitor.ca.

Tank Parameters	
Diameter (ft)	240
Volume (gal)	14,357,570
Turnovers per year	64.063766
Net Throughput (gal/yr)	919,800,000
Number of Columns	25
Effective Column Diameter	0.9
External Shell and Roof Color	White

Speciation Profiles for RVP 0.98, 3.25, and 3.96		
Pollutant	**Weight Fraction of Component**	**Vapor Pressure at 150°F**
Hexane (-n)	0.4	13.29
Benzene	0.25	9.16
Isooctane	0.1	5.07
Toluene	0.42	3.33
Ethylbenzene	0.1	1.42
Xylene (-m)	0.37	1.22
Isopropyl benzene	0.1	0.76
1,2,4-Trimethylbenzene	0.33	0.39
Cyclohexane	0.7	9.09

TANKS 4.0.9d
Emissions Report - Detail Format
Individual Tank Emission Totals

Emissions Report for: Annual

Bakken 413 - Internal Floating Roof Tank

	Losses(lbs)				
Components	Rim Seal Loss	Withdrawl Loss	Deck Fitting Loss	Deck Seam Loss	Total Emissions
Crude oil (Bakken 413)	306.57	3,854.74	906.48	0.00	5,067.80
Isopentane	21.29	37.01	62.94	0.00	121.23
Pentane (-n)	29.23	74.40	86.42	0.00	190.04
Cyclopentane	1.48	6.17	4.38	0.00	12.02
Benzene	0.53	8.06	1.55	0.00	10.14
Cyclohexane	1.25	18.39	3.69	0.00	23.33
Ethylbenzene	0.02	4.12	0.07	0.00	4.22
Xylene (-p)	0.04	8.44	0.13	0.00	8.62
Xylene (-m)	0.07	13.49	0.19	0.00	13.75
Xylene (-o)	0.03	7.63	0.09	0.00	7.75
Hexane (-n)	7.27	67.42	21.50	0.00	96.19
Toluene	0.26	14.57	0.78	0.00	15.62
Unidentified Components	245.11	3,595.05	724.74	0.00	4,564.90

TANKS 4.0.9d
Emissions Report - Detail Format
Individual Tank Emission Totals

Emissions Report for: Annual

Bakken 413 11 psi - Internal Floating Roof Tank

	Losses(lbs)				
Components	Rim Seal Loss	Withdrawl Loss	Deck Fitting Loss	Deck Seam Loss	Total Emissions
Crude oil (Bakken 413 11psi)	949.68	3,833.91	2,808.01	0.00	7,591.59
Isopentane	30.74	36.81	90.90	0.00	158.45
Pentane (-n)	42.21	73.99	124.82	0.00	241.02
Cyclopentane	2.14	6.13	6.32	0.00	14.59
Benzene	0.76	8.01	2.25	0.00	11.02
Cyclohexane	1.80	18.29	5.33	0.00	25.43
Ethylbenzene	0.03	4.10	0.10	0.00	4.24
Xylene (-p)	0.06	8.40	0.19	0.00	8.65
Xylene (-m)	0.09	13.42	0.28	0.00	13.79
Xylene (-o)	0.04	7.59	0.12	0.00	7.76
Hexane (-n)	10.50	67.06	31.06	0.00	108.61
Toluene	0.38	14.49	1.13	0.00	16.00
Unidentified Components	860.90	3,575.62	2,545.51	0.00	6,982.03

TANKS 4.0.9d
Emissions Report - Detail Format
Individual Tank Emission Totals

Emissions Report for: Annual

Bakken 423 - Internal Floating Roof Tank

	Losses(lbs)				
Components	Rim Seal Loss	Withdrawl Loss	Deck Fitting Loss	Deck Seam Loss	Total Emissions
Crude oil (Bakken 423)	437.71	3,833.91	1,294.24	0.00	5,565.87
Isopentane	19.47	31.05	57.56	0.00	108.09
Pentane (-n)	29.24	68.28	86.44	0.00	183.96
Cyclopentane	2.37	9.05	7.00	0.00	18.41
Unidentified Components	386.65	3,725.53	1,143.23	0.00	5,255.41

TANKS 4.0.9d
Emissions Report - Detail Format
Individual Tank Emission Totals

Emissions Report for: Annual

Bakken 430 - Internal Floating Roof Tank

	Losses(lbs)				
Components	Rim Seal Loss	Withdrawl Loss	Deck Fitting Loss	Deck Seam Loss	Total Emissions
Crude oil (Bakken 430)	193.39	3,817.91	571.82	0.00	4,583.12
Isopentane	31.19	57.73	92.21	0.00	181.12
Pentane (-n)	27.85	75.48	82.34	0.00	185.67
Cyclopentane	1.70	7.56	5.04	0.00	14.30
Unidentified Components	132.66	3,677.14	392.24	0.00	4,202.03

Un-Heated Summary

The following annual emission reports were developed for RVP 0.98, 3.25, 3.27, 3.59, 3.96, and 8.41.

Annual Emission Report: RVP 0.98 – Internal Floating Roof Tank

Individual Tank Emission Totals

Components	Losses (lbs)				
	Rim Seal Loss	Withdrawl Loss	Deck Fitting Loss	Deck Seam Loss	Total Emissions
Crude Oil (RVP 0.98)	13.39	4,409.73	39.58	0.00	4,462.70
Hexane (-n)	1.39	17.64	4.10	0.00	23.12
Benzene	0.52	11.02	1.55	0.00	13.10
2,2,4-Trimethylpentane (isooctane)	0.11	4.41	0.31	0.00	4.83
Toluene	0.24	18.52	0.72	0.00	19.49
Ethylbenzene	0.02	4.41	0.06	0.00	4.48
Xylene (-m)	0.06	16.32	0.18	0.00	16.56
Isopropyl benzene	0.01	4.41	0.02	0.00	4.44
1,2,4-Trimethylbenzene	0.01	14.55	0.04	0.00	14.61
Cyclohexane	1.53	30.87	4.52	0.00	36.91
Unidentified Components	9.50	4,287.58	28.08	0.00	4,325.16

Annual Emission Report: RVP 3.25 – Internal Floating Roof Tank

Individual Tank Emission Totals

Components	Losses (lbs)				
	Rim Seal Loss	Withdrawl Loss	Deck Fitting Loss	Deck Seam Loss	Total Emissions
Crude Oil (RVP 3.25)	74.20	4,372.06	219.40	0.00	4,665.66
Hexane (-n)	1.43	17.49	4.24	0.00	23.16
Benzene	0.54	10.93	1.60	0.00	13.08
2,2,4-Trimethylpentane (isooctane)	0.11	4.37	0.33	0.00	4.81
Toluene	0.25	18.36	0.75	0.00	19.36
Ethylbenzene	0.02	4.37	0.06	0.00	4.45
Xylene (-m)	0.06	16.18	0.19	0.00	16.43
Isopropyl benzene	0.01	4.37	0.03	0.00	4.41
1,2,4-Trimethylbenzene	0.01	14.43	0.04	0.00	14.48
Cyclohexane	1.58	30.60	4.67	0.00	36.85
Unidentified Components	70.18	4,250.96	207.50	0.00	4,528.63

Un-Heated Summary

Annual Emission Report: RVP 3.27 – Internal Floating Roof Tank

Individual Tank Emission Totals

Components	Losses (lbs)				
	Rim Seal Loss	Withdrawl Loss	Deck Fitting Loss	Deck Seam Loss	Total Emissions
Crude Oil (RVP 3.27)	74.87	3,973.75	221.38	0.00	4,270.00
Hexane (-n)	1.43	15.89	4.24	0.00	21.57
Benzene	0.54	9.93	1.60	0.00	12.08
2,2,4-Trimethylpentane (isooctane)	0.11	3.97	0.33	0.00	4.41
Toluene	0.25	16.69	0.75	0.00	17.69
Ethylbenzene	0.02	3.97	0.06	0.00	4.05
Xylene (-m)	0.06	14.70	0.19	0.00	14.95
Isopropyl benzene	0.01	3.97	0.03	0.00	4.01
1,2,4-Trimethylbenzene	0.01	13.11	0.04	0.00	13.17
Cyclohexane	1.58	27.82	4.67	0.00	34.07
Unidentified Components	70.85	3,863.68	209.48	0.00	4,144.00

Annual Emission Report: RVP 3.59 – Internal Floating Roof Tank

Individual Tank Emission Totals

Components	Losses (lbs)				
	Rim Seal Loss	Withdrawl Loss	Deck Fitting Loss	Deck Seam Loss	Total Emissions
Crude Oil (RVP 3.59)	85.91	3,842.39	254.03	0.00	4,182.34
Hexane (-n)	1.44	15.37	4.27	0.00	21.08
Benzene	0.55	9.61	1.61	0.00	11.77
2,2,4-Trimethylpentane (isooctane)	0.11	3.84	0.33	0.00	4.28
Toluene	0.25	16.14	0.75	0.00	17.15
Ethylbenzene	0.02	3.84	0.06	0.00	3.92
Xylene (-m)	0.06	14.22	0.19	0.00	14.47
Isopropyl benzene	0.01	3.84	0.03	0.00	3.88
1,2,4-Trimethylbenzene	0.01	12.68	0.04	0.00	12.74
Cyclohexane	1.59	26.90	4.70	0.00	33.19
Unidentified Components	81.86	3,735.95	242.05	0.00	4,059.86

Un-Heated Summary

Annual Emission Report: RVP 3.96 – Internal Floating Roof Tank

Individual Tank Emission Totals

Components	Losses (lbs)				
	Rim Seal Loss	Withdrawl Loss	Deck Fitting Loss	Deck Seam Loss	Total Emissions
Crude Oil (RVP 3.96)	99.40	4,366.89	293.90	0.00	4,760.18
Hexane (-n)	1.46	17.47	4.31	0.00	23.23
Benzene	0.55	10.92	1.63	0.00	13.10
2,2,4-Trimethylpentane (isooctane)	0.11	4.37	0.33	0.00	4.81
Toluene	0.26	18.34	0.76	0.00	19.36
Ethylbenzene	0.02	4.37	0.06	0.00	4.45
Xylene (-m)	0.06	16.16	0.19	0.00	16.41
Isopropyl benzene	0.01	4.37	0.03	0.00	4.40
1,2,4-Trimethylbenzene	0.01	14.41	0.04	0.00	14.47
Cyclohexane	1.60	30.57	4.74	0.00	36.92
Unidentified Components	95.31	4,245.92	281.82	0.00	4,623.05

Annual Emission Report: RVP 8.41 – Internal Floating Roof Tank

Individual Tank Emission Totals

Components	Losses (lbs)				
	Rim Seal Loss	Withdrawl Loss	Deck Fitting Loss	Deck Seam Loss	Total Emissions
Crude Oil (RVP 8.41)	329.52	3,816.02	974.31	0.00	5,119.85
Hexane (-n)	1.68	15.26	4.97	0.00	21.92
Benzene	0.64	9.54	1.88	0.00	12.06
2,2,4-Trimethylpentane (isooctane)	0.13	3.82	0.38	0.00	4.33
Toluene	0.30	16.03	0.88	0.00	17.20
Ethylbenzene	0.02	3.82	0.07	0.00	3.91
Xylene (-m)	0.07	14.12	0.22	0.00	14.41
Isopropyl benzene	0.01	3.82	0.03	0.00	3.86
1,2,4-Trimethylbenzene	0.02	12.59	0.05	0.00	12.66
Cyclohexane	1.85	26.71	5.48	0.00	34.04
Unidentified Components	324.80	3,710.32	960.36	0.00	4,995.48

Heated Summary

The following annual emission reports were developed for RVP 0.98, 3.25, and 3.96.

Annual Emission Report: RVP 0.98 – Internal Floating Roof Tank

Individual Tank Emission Totals

Components	Losses (lbs)				
	Rim Seal Loss	Withdrawl Loss	Deck Fitting Loss	Deck Seam Loss	Total Emissions
Crude Oil (RVP 0.98)	131.05	4,269.47	387.49	0.00	4,788.01
Hexane (-n)	11.84	17.08	35.01	0.00	63.93
Benzene	5.10	10.67	15.09	0.00	30.87
2,2,4-Trimethylpentane (isooctane)	1.13	4.27	3.34	0.00	8.74
Toluene	3.12	17.93	9.21	0.00	30.26
Ethylbenzene	0.32	4.27	0.94	0.00	5.52
Xylene (-m)	1.00	15.80	2.97	0.00	19.77
Isopropyl benzene	0.17	4.27	0.50	0.00	4.94
1,2,4-Trimethylbenzene	0.29	14.09	0.85	0.00	15.22
Cyclohexane	14.17	29.89	41.90	0.00	85.96
Unidentified Components	93.91	4,151.21	277.69	0.00	4,522.81

Annual Emission Report: RVP 3.25 – Internal Floating Roof Tank

Individual Tank Emission Totals

Components	Losses (lbs)				
	Rim Seal Loss	Withdrawl Loss	Deck Fitting Loss	Deck Seam Loss	Total Emissions
Crude Oil (RVP 3.25)	598.58	4,231.81	1,769.89	0.00	6,600.28
Hexane (-n)	15.69	16.93	46.38	0.00	78.99
Benzene	6.76	10.58	20.00	0.00	37.34
2,2,4-Trimethylpentane (isooctane)	1.50	4.23	4.42	0.00	10.15
Toluene	4.13	17.77	12.20	0.00	34.11
Ethylbenzene	0.42	4.23	1.24	0.00	5.89
Xylene (-m)	1.33	15.66	3.93	0.00	20.92
Isopropyl benzene	0.22	4.23	0.66	0.00	5.12
1,2,4-Trimethylbenzene	0.38	13.96	1.12	0.00	15.47
Cyclohexane	18.77	29.62	55.51	0.00	103.91
Unidentified Components	549.39	4,114.59	1,624.43	0.00	6,288.40

Heated Summary

Annual Emission Report: RVP 3.96 – Internal Floating Roof Tank

Individual Tank Emission Totals

Components	Losses (lbs)				
	Rim Seal Loss	Withdrawl Loss	Deck Fitting Loss	Deck Seam Loss	Total Emissions
Crude Oil (RVP 3.96)	837.15	4,226.63	2,475.29	0.00	7,539.07
Hexane (-n)	17.89	16.91	52.90	0.00	87.69
Benzene	7.71	10.57	22.80	0.00	41.08
2,2,4-Trimethylpentane (isooctane)	1.71	4.23	5.04	0.00	10.97
Toluene	4.71	17.75	13.92	0.00	36.38
Ethylbenzene	0.48	4.23	1.41	0.00	6.12
Xylene (-m)	1.52	15.64	4.48	0.00	21.64
Isopropyl benzene	0.25	4.23	0.75	0.00	5.23
1,2,4-Trimethylbenzene	0.43	13.95	1.28	0.00	15.66
Cyclohexane	21.41	29.59	63.31	0.00	114.30
Unidentified Components	781.04	4,109.55	2,309.39	0.00	7,199.99

TANKS 4.0.9d

Degassing Emissions - Tank Parameters

Internal Floating Roof Tank Parameters[1]	
Diameter (ft)	240
Volume (gal)	14,357,570
Turnovers per year	1
Net Throughput (gal/yr)	14,357,570
Number of Columns	25
External Shell and Roof Color	White

Vertical Fixed Roof Tank Parameters[2]	
Shell Height (ft)	48
Shell Diameter (ft)	240
Maximum Liquid Height (ft)	4
Average Liquid Height (ft)	1
Net Throughput (gal/yr)	1,353,647.4
Turnovers per Year	1
External Shell and Roof Color	White

[1] Speciation profile is the same as Bakken 413 and Bakken 413 at 11 psi
[2] Speciation profile is the same as RVP tank runs

TANKS 4.0.9d

Degassing Emissions

Emission Type	Tank Type	VOC (lb/yr)
Withdrawal Losses	Internal Floating Roof	50.83
Working Losses	Fixed Roof	3,153.64
Total VOC Degassing Emissons		3,204.47
		1.60 tpy

Cleaver-Brooks Boiler Expected Emission Data

Producing Steam Firing **Nat Gas**

BACKGROUND INFORMATION

Date	07/29/13	Boiler Model	CBEX Elite
Author	L.C. Banks	Altitude (feet)	700
Customer	ICPE	Operating Pressure (psig	125.00
City & State	---	Furnace Volume (cuft)	507.00
		Furnace Heat Release (btu/hr/cu ft)	121,785
		Heating Surface (sqft)	4466
		Nox System	9

Nat Gas		**Firing Rate**			
		25%	**50%**	**75%**	**100%**
Horsepower		375	750	1125	1500
Input , Btu/hr		15,389,000	30,672,000	46,050,000	61,745,000
CO	ppm	50	50	50	50
	lb/MMBtu	0.036	0.036	0.036	0.036
	lb/hr	0.56	1.12	1.68	2.25
	tpy	2.460	4.903	7.361	9.870
NOx	ppm	9	9	9	9
	lb/MMBtu	0.0106	0.0106	0.0106	0.0106
	lb/hr	0.16	0.32	0.49	0.65
	tpy	0.714	1.422	2.136	2.864
NO	ppm	7.7	7.7	7.7	7.7
	lb/MMBtu	0.009	0.009	0.009	0.009
	lb/hr	0.14	0.28	0.41	0.56
	tpy	0.57	1.14	1.71	2.29
NO_2	ppm	1.4	1.4	1.4	1.4
	lb/MMBtu	0.002	0.002	0.002	0.002
	lb/hr	0.02	0.05	0.07	0.10
	tpy	0.14	0.28	0.43	0.57
SOx	ppm	1.00	1.00	1.00	1.00
	lb/MMBtu	0.0017	0.0017	0.0017	0.0017
	lb/hr	0.0264	0.0526	0.0789	0.1058
	tpy	0.116	0.230	0.346	0.464
VOCs	ppm	12.5	12.5	12.5	12.5
(Non-Methane Only)	lb/MMBtu	0.005	0.005	0.005	0.005
VOCs does not include	lb/hr	0.077	0.153	0.230	0.309
any background VOC	tpy	0.337	0.672	1.008	1.352
emissions.					
PM10 (Filterable)	ppm	N/A	N/A	N/A	N/A
	lb/MMBtu	0.00750	0.00750	0.00750	0.00750
	lb/hr	0.115	0.230	0.345	0.463
	tpy	0.506	1.008	1.513	2.028
PM10 (Condensable)	lb/MMBtu	0.00250	0.00250	0.00250	0.00250
	tpy	0.011	0.34	0.011	0.68
PM2.5 (Filterable)	lb/MMBtu	0.008	0.008	0.008	0.008
	tpy	0.033	1.01	0.033	2.03
PM2.5 (Condensable)	lb/MMBtu	0.0025	0.0025	0.0025	0.0025
	tpy	0.011	0.34	0.011	0.68
Exhaust Data					
Temperature, F		377	401	424	448
Flow	ACFM	5,036	9,938	14,738	20,304
	SCFM (70 Degrees Fah.)	3,266	6,263	9,033	12,112
	DSCFM	2,928	5,589	8,021	10,755
	lb/hr	14,697	28,183	40,649	54,503
Velocity	ft/sec	8.72	17.21	25.53	35.17
	ft/min	523	1,033	1,532	2,110

Notes:

1) All ppm levels are corrected to dry at 3% oxygen.
2) Emission data based on actual boiler efficiency.
3) % H2O , by volume in exhaust gas is **17.24** % O2, by volume **2.47**
4) Water vapor in exhaust gas is **98.91** lbs/MMBtu of fuel fired
5) CO2 produced is **116.31** lbs/MMBtu of fuel fired
6) Particulate is exclusive of any particulates in combustion air or other sources of residual particulates from mater PM level indicated on this form is based on combustion air and fuel being clean and turndown up to 4:1.
7) Heat input is based on high heating value (HHV).
8.) Emission produced in tons per year (tpy) is based on 24 hours per day for 365 days = 8,760 hours per year
9.) Exhaust data is based on a clean and properly sealed boiler.
10.) Emission data is based on a burner turndown of 4 to 1.
11.) Maximum flame temperature is 2800 degrees fahrenheit.

14) Fuel High Heating Value = **1000** Btu/FT^3

Cleaver-Brooks Boiler Expected Emission Data

Producing Steam Firing **Nat Gas**

BACKGROUND INFORMATION

Date	06/17/13	Boiler Model	CBEX Elite
Author	L.C. Banks	Altitude (feet)	700
Customer	----	Operating Pressure (psig	125.00
City & State	----	Furnace Volume (cuft)	110.00
		Furnace Heat Release (btu/hr/cu ft)	113,809
		Heating Surface (sqft)	860
		Nox System	7

Nat Gas		**Firing Rate**			
		25%	**50%**	**75%**	**100%**
Horsepower		75	150	225	300
Input , Btu/hr		3,080,000	6,176,000	9,323,000	12,519,000
CO	ppm	50	50	50	50
	lb/MMBtu	0.036	0.036	0.036	0.036
	lb/hr	0.11	0.23	0.34	0.46
	tpy	0.492	0.987	1.490	2.001
NOx	ppm	7	7	7	7
	lb/MMBtu	0.0082	0.0082	0.0082	0.0082
	lb/hr	0.03	0.05	0.08	0.10
	tpy	0.111	0.223	0.336	0.452
NO	ppm	6.0	6.0	6.0	6.0
	lb/MMBtu	0.007	0.007	0.007	0.007
	lb/hr	0.02	0.04	0.07	0.09
	tpy	0.09	0.18	0.27	0.36
NO_2	ppm	1.1	1.1	1.1	1.1
	lb/MMBtu	0.001	0.001	0.001	0.001
	lb/hr	0.00	0.01	0.01	0.02
	tpy	0.02	0.04	0.07	0.09
SOx	ppm	1.00	1.00	1.00	1.00
	lb/MMBtu	0.0017	0.0017	0.0017	0.0017
	lb/hr	0.0053	0.0106	0.0160	0.0215
	tpy	0.023	0.046	0.070	0.094
VOCs	ppm	4.0	4.0	4.0	4.0
(Non-Methane Only)	lb/MMBtu	0.002	0.002	0.002	0.002
VOCs does not include	lb/hr	0.006	0.012	0.019	0.025
any background VOC	tpy	0.027	0.054	0.082	0.110
emissions.					
PM10 (Filterable)	ppm	N/A	N/A	N/A	N/A
	lb/MMBtu	0.00750	0.00750	0.00750	0.00750
	lb/hr	0.023	0.046	0.070	0.094
	tpy	0.101	0.203	0.306	0.411
PM10 (Condensable)	lb/MMBtu	0.00250	0.00250	0.00250	0.00250
	tpy	0.011	0.07	0.011	0.14
PM2.5 (Filterable)	lb/MMBtu	0.008	0.008	0.008	0.008
	tpy	0.033	0.20	0.033	0.41
PM2.5 (Condensable)	lb/MMBtu	0.0025	0.0025	0.0025	0.0025
	tpy	0.011	0.07	0.011	0.14
Exhaust Data					
Temperature, F		379	404	430	455
Flow	ACFM	1,049	2,169	3,373	4,662
	SCFM (70 Degrees Fah.)	679	1,361	2,055	2,759
	DSCFM	611	1,225	1,849	2,482
	lb/hr	3,055	6,126	9,248	12,417
Velocity	ft/sec	8.01	16.56	25.76	35.60
	ft/min	481	994	1,546	2,136

Notes:

1) All ppm levels are corrected to dry at 3% oxygen.
2) Emission data based on actual boiler efficiency.
3) % H2O , by volume in exhaust gas is **15.51** % O2, by volume **4.41**
4) Water vapor in exhaust gas is **99.62** lbs/MMBtu of fuel fired
5) CO2 produced is **116.31** lbs/MMBtu of fuel fired
6) Particulate is exclusive of any particulates in combustion air or other sources of residual particulates from mater PM level indicated on this form is based on combustion air and fuel being clean and turndown up to 4:1.
7) Heat input is based on high heating value (HHV).
8.) Emission produced in tons per year (tpy) is based on 24 hours per day for 365 days = 8,760 hours per year
9.) Exhaust data is based on a clean and properly sealed boiler.
10.) Emission data is based on a burner turndown of 4 to 1.
11.) Maximum flame temperature is 2800 degrees fahrenheit.

14) Fuel High Heating Value = **1000** Btu/FT^3

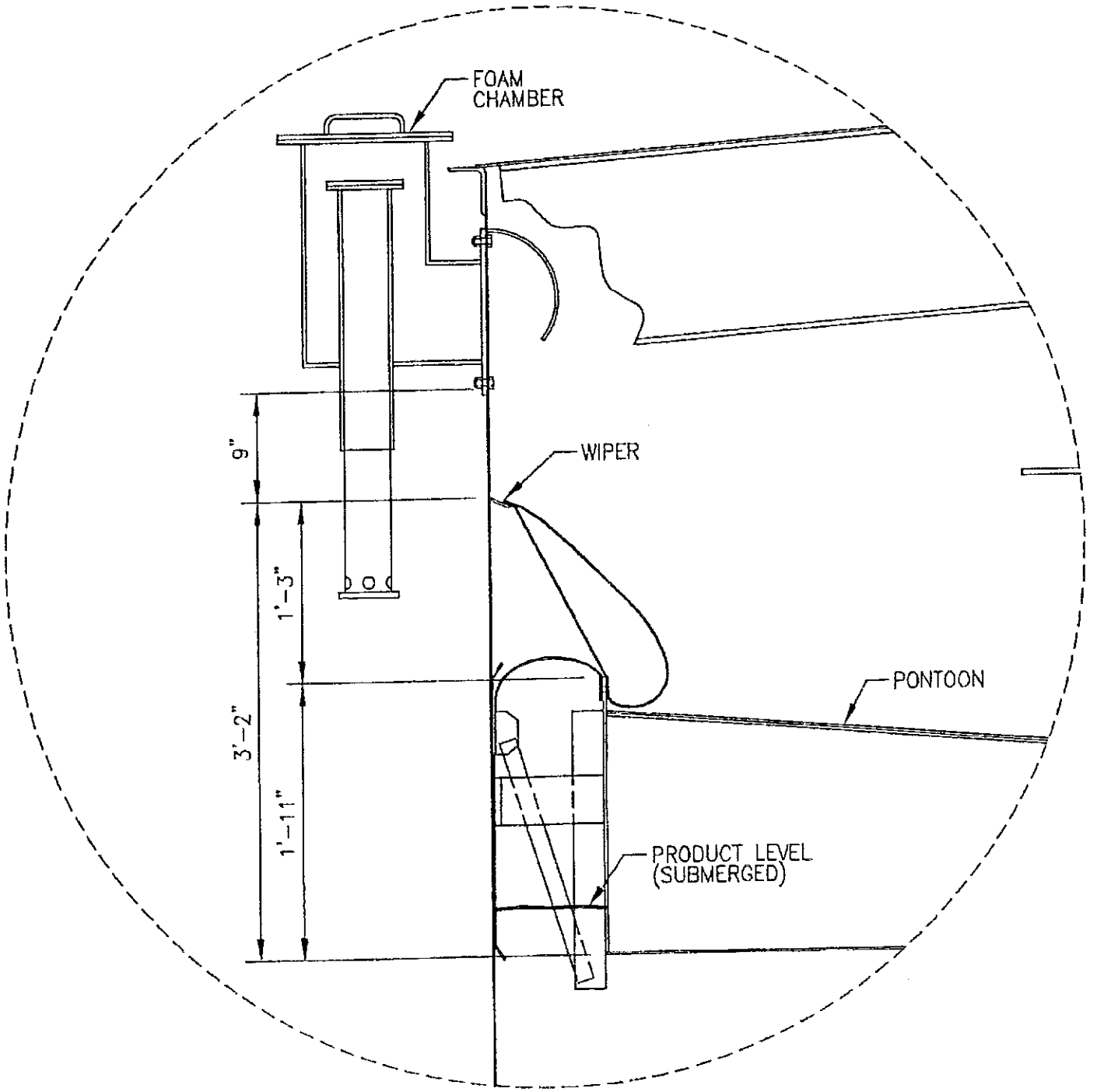
FOAM
CHAMBER
WIPER
PONTOON
PRODUCT LEVEL
(SUBMERGED)
9"
1'-3"
3'-2"
1'-11"

From: Phanindra Kondagari [mailto:PKondagari@flareindustries.com]
Sent: Tuesday, July 23, 2013 3:06 PM
To: Russ Bafford
Cc: Jon Sachs; Dave Gibson; Timothy Egan
Subject: 497-005 TSPT marine vapor control system using CEB combustion technology

Dear Mr. Bafford,

Per your request here are the emission numbers for the CEB.

	Guaranteed
Nox Emissions	**≤ 0.023 lb/MMBTU**
CO Emissions	**≤ 0.01 lbs./MMBTU**

Please let me know if you need any additional information.

Thanks & Regards

Phanindra Kondagari
Sr.Project Manager
Enclosed Combustion Group

Flare Industries
16310 Bratton Lane, Bldg. 3, Suite 350 | Austin, Texas 78728 USA
Office: +1 (512) 836-9473 Ext. 172 pkondagari@flareindustries.com | www.flareindustries.com

Locations: Headquarters & FI Combustion - Austin, Texas | Texas & Gulf Coast - Houston, Texas | Mactronic - Red Deer, AB, Canada | Flare Industries (UK) Ltd. - London | Middle East & North Africa - Abu Dhabi | Flare Industries (Asia-Pacific) Pte. Ltd. – Singapore
Products: Flares | Thermal Oxidizers | Ignition Systems | Rental Flares | Spare Parts & Service

Flare Industries welcomes your feedback. Please tell us how we are doing at feedback@flareindustries.com

From: Phanindra Kondagari [mailto:PKondagari@flareindustries.com]
Sent: Friday, December 13, 2013 12:28 PM
To: Chris S Drechsel (Christopher.S.Drechsel@tsocorp.com)
Cc: Dave Gibson; Jon Sachs; Timothy Egan; davidcorpron@savageservices.com; Irina Makarow (Irina.Makarow@abam.com); Eric Albright; Eric Hansen; Price, Douglas B (Douglas.B.Price@tsocorp.com)
Subject: Tesoro Savage Vancouver Energy Distribution Terminal VCU Emission Factors - Particulate Matter

Hello Chris,

Due to the nature of the equipment (CEB), Flare Industries does not guarantee PM emissions as the PM rate is largely dependent on the Particulate loading in the combustion air , however based on our past experience we believe that using EPA AP-42 PM emission factors (Section 1.4 for Natural Gas Combustion) of 7.6 Lb/MMSCF will provide an conservative estimate.

Please let us know if you need any additional information.

Thanks & Regards

Phanindra Kondagari
Sr.Process Engineer
Enclosed Combustion Group

Flare Industries
16310 Bratton Lane, Bldg. 3, Suite 350 | Austin, Texas 78728 USA
Office: +1 (512) 836-9473 Ext. 172 | Mobile: +1 (512) 574-6396
pkondagari@flareindustries.com | www.flareindustries.com

Locations: Headquarters & FI Combustion - Austin, Texas | Texas & Gulf Coast - Houston, Texas | Mactronic - Red Deer, AB, Canada | Flare Industries (UK) Ltd. - London | Middle East & North Africa - Abu Dhabi | Flare Industries (Asia-Pacific) Pte. Ltd. – Singapore
Products: Flares | Thermal Oxidizers | Ignition Systems | Rental Flares | Spare Parts & Service

Flare Industries welcomes your feedback. Please tell us how we are doing at feedback@flareindustries.com

1.0 INTRODUCTION (Continued)

Table 1-2
SUMMARY OF TEST RESULTS
Spec Services
Oxy Flare
November 1, 2012

PARAMETER	INLET	EXHAUST		PERMIT LIMIT
		As Found	Defaulted [1]	
O_2, %	0.21	10.23		
CO_2, %	1.69	6.76		
N_2, %	0.73	83.01		
H_20, %		10.5		
Flow Rate, wscfm (Faciliy flow monitor)	61.12	1,514		
Flow Rate, dscfm (Facility flow monitor)	61.12	1,355		
Temperature, °F (as measured at sampling ports)	74.9	1,831		
Temperature, °F (as measured at by set thermocouple)		2,154		>2000
Btu/scf	1316			
MMBtu/Hr	4.83			27
NOx:				
ppm		4.38		
ppm @ 3% O_2		7.34		15
lb/hr (as NO_2)		0.04		
lb/day (as NO_2)		1.0		
lb/MMBtu (as NO_2)		0.009		
lb/MMCF (as NO_2)		11.78		
CO:				
ppm		6.6	20	
ppm @ 3% O_2		11.0	33.6	50
lb/hr		0.04	0.12	
lb/day		0.95	2.88	
lb/MMBtu		0.008	0.025	
lb/MMCF		10.78	32.75	
Hydrocarbons:				
CH_4, ppm	795,150	< 10.00		
TGNMO, ppm (as CH_4)	587,040	4.90		
TGNMO, lb/hr (as CH_4)	90.9	0.02		
TGNMO, lb/MM Btu (as CH_4)	-	0.003		
TGNMO, lb/day (as CH_4)	2181.0	0.40		
TGNMO, ppm @ 3% O_2 (as CH_4)		8.22		
Destruction Eff. % (DRE)		99.98		98
lb/MMCF		4.58		7
Particulate (as PM_{10}):				
gr/dscf		0.0037		0.112
lb/hr		0.054		
lb/MM Btu		0.011		
lb/day		1.28		
lb/MMCF		14.60		
Total Sulfur Compounds,				
Total Reduced Sulfur Inlet, ppm	< 0.5			150 (Rule 431.1)
SOx Exhaust, lb/hr (as H_2S)[2]		< 0.0002		
SOx Exhaust, lb/day (as H_2S)[2]		< 0.004		5
lb/MMCF		< 0.04		

Notes:
The results in this table are the averages of all measurements.
(1) Values presented reflect 20% of the selected analyzer range.
(2) The exhaust SOx lb/hr and lb/day results are calculated from inlet reduced sulfur concentrations.

ENTECH ENGINEERING INC.
P. O. Box 890746 . Houston, Texas 77289-0746 . (281)332-3118

Table 2.
Kirby Inland Marine
Barge Cleaning Terminal
Corpus Christi, Nueces County, Texas
Clean Enclosed Burner (EPN CEB-DEGAS)
Destruction Removal Efficiency (DRE)
Test Date 04/16/09

Test ID		Test 1	Test 2	Test 3	Average
Sampling Date		04/16/09	04/16/09	04/16/09	-
Sampling Time		11:19 - 12:19	18:15 - 19:15	19:59 - 20:59	-
Sampling Duration		60	60	60	60
VOC Inlet *	lb/hr	629.781	337.914	382.254	449.983
VOC Stack *	lb/hr	0.054	0.028	0.031	0.037
DRE	%	99.991	99.992	99.992	99.992

* Note: VOC Stack and Inlet are minus Methane and Ethane.

ENTECH ENGINEERING INC.
P. O. Box 890746 . Houston, Texas 77289-0746 . (281)332-3118

Table 3.
Kirby Inland Marine
Barge Cleaning Terminal
Corpus Christi, Nueces County, Texas
Clean Enclosed Burner (EPN CEB-DEGAS)
Stack Sampling Parameters and Emission Rates Summary
Test Date 04/16/09

Test ID	Test 1	Test 2	Test 3	Average
Sampling Date	04/16/09	04/16/09	04/16/09	-
Sampling Time	11:19 - 12:19	18:15 - 19:15	19:59 - 20:59	-
Sampling Duration	60	60	60	60

Process Operational Data

Fuel F Factor	dscf/MMBtu	13514.76	13823.18	13849.61	13729.18
Fuel Higher Heating Value	Btu/cu.ft	450.04	413.63	415.51	426.39
Inlet Fuel Flow	SCFM	774	456	512	581
	SCFH	46461	27331	30732	34841
Firing Rate	MMBtu/hr	20.91	11.30	12.77	14.99

Stack Condition Data

Excess Oxygen (O_2)	vol%, dry	6.39	5.33	5.39	5.70

Outlet Emission Data

NOx	ppmv, dry	7.87	5.65	5.35	6.29
	lb/MMBtu	0.018	0.013	0.012	0.014
	lb/hr	0.383	0.141	0.152	0.225
CO	ppmv, dry	7.69	1.91	2.86	4.15
	lb/MMBtu	0.011	0.003	0.004	0.006
	lb/hr	0.228	0.029	0.049	0.102

ENTECH ENGINEERING INC.
P. O. Box 890746 . Houston, Texas 77289-0746 . (281)332-3118

Table 5.
Kirby Inland Marine
Barge Cleaning Terminal
Corpus Christi, Nueces County, Texas
Clean Enclosed Burner (EPN CEB-DEGAS)
Destruction Removal Efficiency (DRE)
Test Date 04/17/09

Test ID		Test 1	Test 2	Test 3	Average
Sampling Date		04/17/09	04/17/09	04/17/09	-
Sampling Time		10:15 - 11:15	11:35 - 12:35	12:55 - 13:55	-
Sampling Duration		60	60	60	60
VOC Inlet *	lb/hr	706.563	649.074	637.927	664.521
VOC Stack *	lb/hr	0.045	0.043	0.042	0.043
DRE	%	99.994	99.993	99.993	99.993

* Note: VOC Stack and Inlet are minus Methane and Ethane.

ENTECH ENGINEERING INC.
P. O. Box 890746 . Houston, Texas 77289-0746 . (281)332-3118

Table 6.
Kirby Inland Marine
Barge Cleaning Terminal
Corpus Christi, Nueces County, Texas
Clean Enclosed Burner (EPN CEB-DEGAS)
Stack Sampling Parameters and Emission Rates Summary
Test Date 04/17/09

Test ID		Test 1	Test 2	Test 3	Average
Sampling Date		04/17/09	04/17/09	04/17/09	-
Sampling Time		10:15 - 11:15	11:35 - 12:35	12:55 - 13:55	-
Sampling Duration		60	60	60	60
Process Operational Data					
Fuel F Factor	dscf/MMBtu	8970.76	8963.91	8970.90	8968.52
Fuel Higher Heating Value	Btu/cu.ft	2449.88	2489.56	2459.06	2466.17
Inlet Fuel Flow	SCFM	107	97	97	101
	SCFH	6448	5840	5831	6039
Firing Rate	MMBtu/hr	15.80	14.54	14.34	14.89
Stack Condition Data					
Excess Oxygen (O_2)	vol%, dry	7.45	8.00	7.68	7.71
Outlet Emission Data					
NOx	ppmv, dry	11.73	9.08	9.33	10.05
	lb/MMBtu	0.020	0.016	0.016	0.017
	lb/hr	0.309	0.229	0.227	0.255
CO	ppmv, dry	1.27	0.53	0.76	0.85
	lb/MMBtu	0.001	0.001	0.001	0.001
	lb/hr	0.020	0.008	0.011	0.013

1.0 INTRODUCTION (Continued)

Table 1-2
SUMMARY OF TEST RESULTS
Warren E&P
NWU Flare
July 11, 2011

PARAMETER	INLET	EXHAUST		PERMIT LIMIT
		As Found	Defaulted [1]	
O_2, %	0.00	8.73		
CO_2, %	6.33	7.43		
N_2, %	0.91	83.85		
H_2O, %		12.7		
Flow Rate, wscfm (Faciliy flow monitor)	113.75	2,002		
Flow Rate, dscfm (Facility flow monitor)	113.75	1,749		
Temperature, °F (as measured at sampling ports)	77	2,056		
Temperature, °F (as measured at by set thermocouple)		2,103		>1400
Btu/scf	1016			
MMBtu/Hr	6.93			17
NOx:				
ppm		4.45		
ppm @ 3% O_2		6.54		15
lb/hr (as NO_2)		0.06		
lb/day (as NO_2)		1.4		
lb/MMBtu (as NO_2)		0.008		
lb/MMCF (as NO_2)		8.30		
CO:				
ppm		6.7	20	
ppm @ 3% O_2		9.9	29.4	50
lb/hr		0.05	0.16	
lb/day		1.25	3.72	
lb/MMBtu		0.007	0.022	
lb/MMCF		7.62	22.71	
Hydrocarbons:				
CH_4, ppm	888,000	< 10.00		
TGNMO, ppm (as CH_4)	142,100	4.75		
TGNMO, lb/hr (as CH_4)	40.9	0.02		
TGNMO, lb/MM Btu (as CH_4)	-	0.003		
TGNMO, lb/day (as CH_4)	982.6	0.50		
TGNMO, ppm @ 3% O_2 (as CH_4)		6.98		
Destruction Eff. % (DRE)		99.95		98
lb/MMCF		3.08		7
Particulate (as PM_{10}):				
gr/dscf		0.0013		0.112
lb/hr		0.020		
lb/MM Btu		0.003		
lb/day		0.49		
lb/MMCF		2.98		
Total Sulfur Compounds,				
Total Reduced Sulfur Inlet, ppm	< 0.50			
SOx Exhaust, lb/hr (as H_2S)[2]		< 0.0003		
SOx Exhaust, lb/day (as H_2S)[2]		< 0.01		5
lb/MMCF		< 0.04		

Notes:
The results in this table are the averages of all measurements.
(1) Values presented reflect 20% of the selected analyzer range.
(2) The exhaust SOx lb/hr and lb/day results are calculated from inlet reduced sulfur concentrations.

Section 5.2 – Wastewater/Stormwater Discharge Permit Applications

WAC 463-60-537
Applications for Permits and Authorizations – Wastewater/stormwater discharge permit applications.

The application for site certification shall include:

(1) A completed National Pollutant Discharge Elimination System (NPDES) permit application, for any proposed discharge to surface waters of the state of Washington, pursuant to the requirements of WAC 463-76-031; or

(2) For any proposed discharge to publicly owned treatment works (POTW) and/or groundwater of the state of Washington, a state waste discharge application;

(3) A notice of intent to be covered under any applicable statewide general permit for storm water discharge.

(04-23-003, recodified as § 463-60-537, filed 11/4/04, effective 11/11/04. Statutory Authority: RCW 80.50.040 (1) and (12). 04-21-013, § 463-42-537, filed 10/11/04, effective 11/11/04.)

Section 5.2 Wastewater Permit Application

City of Vancouver
Industrial Information Form

Business Name:	Tesoro Savage Petroleum Terminal, LLC	
Facility Address:	5501 Northwest Lower River Road	
Mailing Address:	9001 W Legacy Center Way	
(if different)	Midvale, UT 84047	
Name of Contact:	Kelly Flint	
Title:	Authorized Person	
E-mail:	generalcounsel@savageservices.com	
Phone:	(801) 944-6600	Fax: (801) 944-6554

For Office Use Only:

Eng No.:
Possible Classified? Y N
WRP Staff:
Date IP App sent:
Date IP App due:
IP Staff Assigned:
Comments:

Nature of business:	*(Briefly describe your business AND any activities that produce wastewater.)*
See Attached	

Please answer each of the following questions:

1.	Yes ☑	No ☐	Is this business or facility connected to the city's sanitary sewers? *(Are there toilets, sinks or drains in the facility connected to the city sewer system?)*
2.	Yes ☑	No ☐	Does this business or facility discharge ANYTHING OTHER THAN domestic - toilet and sink - wastewater to city sanitary sewers? (*Will process industrial or commercial wastewater be sent to floor drains, batch or process drains, and then discharged to the city sanitary sewers?)* ***If yes, please check one of the following estimates.*** *(Shown below in gallons per day.)*
			Estimated process wastewater discharges: ☐ 0-99 ☐ 100-999 ☐ 1000-3999 ☑ >4000 GPD
3	Yes ☑	No ☐	Does this business have shop or facility floor drains, other than those in restrooms?
4.	Yes ☑	No ☐	Does this business store chemicals or petroleum products in containers of more than 5 gallons? ***If yes, provide information below on materials stored.*** *(Attach and use extra page if needed.)*

Chemical or Active Ingredient	Brand Name	Purpose	Container Size, gallons	Estimated Amounts On Site Avg., gallons.	Max., gallons
See Attached					

5.	Yes ☑	No ☐	Does this facility perform on-site vehicle maintenance or vehicle/equipment washing?

Please fax the completed, signed form to (360) 487-7139 or mail to Industrial Pretreatment, City of Vancouver Engineering Services, PO Box 1995, Vancouver, WA 98668. If you have questions or need help completing this form, contact the City of Vancouverôs Industrial Pretreatment or Water Protection divisions at (360)487-7130.

CERTIFICATION STATEMENT:

I certify that the information submitted is, to the best of my knowledge and belief, true and accurate.

Signature _____ Date _____

Kelly Flint
Printed Name

Authorized Person
Title

Application for a State Waste Discharge Permit to Discharge Industrial Wastewater to a Publicly-Owned Treatment Works (POTW)

This application is for a state waste discharge permit for a discharge of industrial wastewater to a publicly-owned treatment works (POTW) as required by Chapter 90.48 RCW and Chapter 173-216 WAC. It is designed to provide Ecology with information on pollutants in the waste stream, materials that may enter the waste stream, and the flow characteristics of the discharge.

Ecology may request additional information to clarify the conditions of this discharge. The applicant should reference information previously submitted to Ecology that applies to this application in the appropriate section.

SECTION A. GENERAL INFORMATION

1. Applicant Name: Tesoro Savage Petroleum Terminal LLC

2. Facility Name: Vancouver Energy
(if different from Applicant)

3. Applicant Mail Address: 9001 West Legacy Center Way
Street

Midvale, UT — 84047
City/State — Zip

4. Facility Location Address: 5501 NW Lower River Road
(if different from 3 above) Street

Vancouver, WA — 98660
City/State — Zip

5. UBI No. 603308951

Sometimes called a registration, tax, "C," or resale number, the Unified Business Identifier (UBI) number is a nine-digit number used to identify persons engaging in business activities. The number is assigned when a person completes a Master Business Application to register with or obtain a license from state agencies. The Departments of Revenue, Licensing, Employment Security, Labor and Industries, and the Corporations Division of the Secretary of State are among the state agencies participating in the UBI program.

6. Latitude/longitude of the facility as decimal degrees (NAD83/WGS84):
45.651778 / -122.731131

FOR OFFICE USE ONLY	Check One: New/Renewal ☐ Modification ☐		
Date Application Received _____	Date Fee Paid _____	Application/ Permit No. _____	Date Application Accepted _____

7. Person to contact who is familiar with the information contained in this application:

Kelly Flint	Authorized Person
Name	Title
(801) 944-6600	(801) 944-6554
Telephone number	Fax number

8. Check One:

☐ **Permit Renewal** (including renewal of temporary permits)

Does this application request a greater amount of wastewater discharge, a greater amount of pollutant discharge, or a discharge of different pollutants than specified in the last permit application for this facility? ☐ YES ☐ NO

For permit renewals, the current permit is an attachment, by reference, to this application.

☐ **Permit Modification**

☐ **Existing Unpermitted Discharge**

☒ **Proposed Discharge**

Anticipated date of discharge: _____

I certify under penalty of law that this document and all attachments were prepared under my direction or supervision in accordance with a system designed to assure that qualified personnel properly gather and evaluate the information submitted. Based on my inquiry of the person or persons who manage the system, or those persons directly responsible for gathering the information, the information submitted is, to the best of my knowledge and belief, true, accurate, and complete. I am aware that there are significant penalties for submitting false information, including the possibility of a fine and/or imprisonment for knowing violations.

		Authorized Person
Signature*	Date	Title

Kelly Flint
Printed Name

*Applications must be signed as follows: corporations, by a principal executive officer of at least the level of vice-president; partnership, by a general partner; sole proprietorship, by the proprietor. If these titles do not apply to your organization, the person who makes budget decisions for this facility must sign the application.

The application signatory may delegate signature authority for submittals required by the permit, such as monthly reports, to a suitable employee. You can delegate this authority to a qualified individual or to a position, which you expect to fill with a qualified individual. If you wish to delegate signature authority, please complete the following:

Signature of delegated employee	Date	Title or function at the facility

Printed name

SECTION B. PRODUCT INFORMATION

1. Briefly describe all manufacturing processes and products, and/or commercial activities, at this facility. Provide the applicable Standard Industrial Category (SIC) and the North American Industry Classification System (NAICS) Code(s) for each activity (see *North American Industrial Classification System,* 2007 ed.). You can find the 1997 NAICS codes and the corresponding 1987 Standard Industry Category (SIC) codes at (http://www.census.gov/epcd/naics/frames3.htm).

Description: Vancouver Energy will transfer crude oil transported to the Facility by rail into storage tanks and onto vessels for shipment to North American west coast refineries. There will be no processing of crude oil at the proposed Facility. Crude oil will be transferred from the rail cars into storage tanks or directly to vessels. A boiler plant may be used to heat incoming rail cars to maintain property viscosity of crude oil while in the Facility. The transfer pipelines and storage tanks will be equipped with electric heating elements to maintain temperature. The City water supply will be treated to provide boiler feed water. The boiler plant wastewater will be pumped and comingled with domestic sewage from the Administration/Support Buildings prior to discharge to the existing sanitary sewer (Waste Stream 1). Process wastewater from the unloading facility, including condensate blowdown, miscellaneous parts wash, facility washdown, maintenance cycling fire pump cooling water, and rail car exterior washing, will be hauled off site for treatment (Waste Stream 2). Fire pump cooling water resulting from the weekly maintenance cycling of the fire pumps will be comingled with future domestic sewage from the Storage Building located at the Storage Area and discharged to the existing sanitary sewer (Waste Stream 3). Fire pump cooling water, air quality treatment bottom drains, and domestic sewage from the Marine Terminal will be hauled off site (Waste Stream No. 4). Industrial SIC and NAICS codes for this Facility are SIC 5171 and NAICS 422710: "Petroleum Bulk Station & Terminal."

2. List raw materials and products used at his facility:

Type	RAW MATERIALS	Quantity
Grapes (Example)		*1,000 tons per year*
Crude Oil		360,000 U.S. barrels per day (maximum)

Type	PRODUCTS	Quantity
Grape Juice(Example)		*300,000 gallons per year*
N/A		N/A

SECTION C. PLANT OPERATIONAL CHARACTERISTICS

1. For each process listed in B.1. that generates wastewater, list the process, assign the waste stream a name and an ID # and describe whether it is a batch or continuous flow.

Process	Waste Stream Name	Waste Stream ID#	Batch (B) or Continuous (C) Process
Boiler and Administrative & Support Buildings	Waste Stream 1	001	C
Rail unloading building, including containment pans, fire pump cooling, and equipment/part washdown	Waste Stream 2	002	B Haul Off
Storage area fire pump cooling and Storage Building	Waste Stream 3	003	B
Marine Terminal fire pump cooling and domestic sewage	Waste Stream 4	004	B Haul Off

2. On a separate sheet, produce a schematic drawing showing production processes, water flow through the facility, wastewater treatment devices and waste streams as named above. The drawing should indicate the source of intake water and show the operations contributing wastewater to the effluent. The treatment units should be labeled. Construct a water balance by showing average flows between intakes, operations, treatment units, and points of discharge to the POTW. (*See the example on page 16 of this application form.)*

3. What is the maximum daily wastewater discharge flow? 29,069 gallons/day

   What is the maximum average monthly wastewater discharge flow (daily flows averaged over a month)? 21,104 gallons/day

4. Describe any planned wastewater treatment improvements or changes in wastewater disposal methods, and the schedule for these improvements. *(Use additional sheets, if necessary and label as attachment C4.)*

Wastewaters from the Facility will be discharged in accordance with all applicable permits and federal, state, and local pretreatment standards as specified in VMC 14.010.000. At this time, the proposed wastewater treatment processes are as follows:

Preliminary design for the boiler plant indicates that a reverse osmosis unit followed by additional water softeners will be used to treat raw water. Anti-scalant will be added to reduce scaling within the boiler and steam systems. A combination of heat exchangers will be used to reduce discharged temperatures to less than 104 degrees Fahrenheit. Process water discharges from the boiler will pass through an oil-water separator prior to comingling with the domestic sewer from the Administration and Support Buildings.

Cooling water from the fire pumps will be supplied from the City's water system. Discharges will be treated through an oil-water separator prior to comingling with domestic sewer from the Storage Building.

Monitoring manholes will be provided at each sanitary sewer connection from the project site to public sewer. Monitoring will be conducted to confirm that the waste streams meet the requirements of the City's pretreatment ordinance and applicable permit conditions.

5. If production processes are subject to seasonal variations, provide the following information. The combined value for each month should equal the estimated total monthly flow. Please indicate the proper flow unit by checking one of the following boxes:

☒ gallons per day ☐ gallons per month ☐ million gallons per month

Waste Stream ID#	MONTHS											
	J	F	M	A	M	J	J	A	S	O	N	D
001	22474	21546	20615	19692	18764	17377	17377	18764	19692	20619	21547	22474
003	257	257	257	257	257	257	257	257	257	257	257	257
Estimated Total Monthly Flow (GPD)	22731	21803	20872	19949	19021	17634	17634	19021	19949	20876	21804	22731

6. How many hours a day does this facility typically operate? 24

How many days a week does this facility typically operate? 7

How many weeks per year does this facility typically operate? 52

7. List all incidental materials, such as oil, paint, grease, solvents, and cleaners, that are used or stored on site (*list only those with quantities greater than 10 gallons for liquids and 50 pounds for solids).* For solvents and solvent-based cleaners, include a copy of the material safety data sheet and estimate the quantity used. (*Use additional sheets, if necessary, and label as attachment C.7.)*

Materials/Quantity Stored: See Attachment C.7

8. Some types of facilities are required to have spill or waste control plans. Does this facility have:		Yes	No
a.	A spill prevention, control, and countermeasure plan (40 CFR 112)?	☒	☐
b.	An Oil Spill Contingency Plan (chapter 173-182 WAC)?	☒	☐
c.	An emergency response plan (per WAC 173-303-350)?	☒	☐
d.	A runoff, spillage, or leak control plan (per WAC 173-216-110(f))?	☒	☐
e.	Any spill or pollution prevention plan required by local, state or federal authorities? If yes specify: Washington State Energy Facility Site Evaluation Council	☒	☐
f.	A solid waste control plan?	☐	☒
g.	A Slug Discharge Control Plan (40 CFR 403.8(f)(2)(v))?	☐	☒

SECTION D. WATER CONSUMPTION AND WATER LOSS

1. Potable water source(s):

☒ Public System (Specify) City of Vancouver

☐ Private Well ☐ Surface Water

a. Water Right Permit Number: N/A

b. Legal Description of Water Source

N/A ¼S, N/A ¼E, N/A , Section, N/A TWN, N/A R

2. Potable water use

a. Indicate total water use___

Gallons per day (average) 59,778

Gallons per day (maximum) 85,305

b. Is water metered?

☒ YES ☐ NO

SECTION E. WASTEWATER INFORMATION

1. How are the water intake and effluent flows measured?

   Intake: Public Water Meter

   Effluent Not Metered

2. Describe the collection method for the samples analyzed below. (*i.e.*, grab, 24-hour composite). Applicants must collect grab samples (not composites) for analysis of pH, temperature, cyanide, total phenols, residual chlorine, oil and grease, fecal coliform (including E. coli), and Enterococci (previously known as fecal streptococcus at § 122.26 (d)(2)(iii)(A)(3)),or volatile organics.

   Effluent sampling, if required by permit, will be collected using the grab sample method for the required analysis, including pH, temperature, cyanide, total phenols, residual chlorine, oil and grease, fecal coliform, enterococci, and volitile organics.

3. Has the effluent been analyzed for any other parameters than those identified in question E.4.? ☒ YES ☐ NO
   If yes, attach results and label as attachment E.4. This data must clearly show the date, method and location of sampling. *(Note: Ecology may require additional testing.)*

4. Provide measurements or range of measurements for treated wastewater prior to discharge to the POTW for the parameters with an "X" in the left column. If you obtain the application from the internet, contact Ecology's regional office to see if testing for a subset of these parameters is permissible. All analyses (except pH) must be conducted by a laboratory registered or accredited by Ecology (WAC 173-216-125). If this is an application for permit renewal, provide data for the last year for those parameters that are routinely measured. For parameters measured only for this application, place the values under "Maximum." Report the values with units as specified in the parameter name or in the detection level.

   The Permittee must use the specified analytical methods, detection limits (DLs) and quantitation levels (QLs) in the following table unless Ecology approves an alternate method or the method used produces measurable results in the sample and EPA has listed it as an EPA approved method in 40 CFR Part 136. If the Permittee uses an alternative method as allowed above, it must report the test method, DL, and QL on the discharge monitoring report or in the required report.

X	Parameter	Measurement Values			Number of Analyses	Analytical Method Std. Methods 19th,20th edition or EPA	Detection Limit/Quantitation Level
		Minimum	Maximum	Average			
	BOD (5 day)					SM 5210 B	/2 mg/l
	COD					SM 5220 D	/10 mg/l
	Total suspended solids					SM 2540 D	/5 mg/l
	Fixed Dissolved Solids					SM 2540 E	
	Total dissolved solids					SM 2540 C	
	Conductivity (micromhos/cm)					SM 2510 B	
	Ammonia-N as N					SM 4500-NH_3 C	/0.3 mg/L
	pH					SM 4500-H	0.1 standard units
	Fecal coliform (organisms/100 mL)					SM 9221 E or 9222 D	
	Total coliform (organisms/100 mL)					SM 9221 B or 9222 B	
	Dissolved oxygen					SM 4500-O C/G	
	Nitrate + nitrite-N as N					SM 4500-NO_3 E	100 µg/L
	Total kjeldahl N as N					SM 4500-N_{org} C/E/FG	300 µg/l
	Ortho-phosphate-P as P					SM 4500-P E/F	10 µg/l
	Total-phosphorous-P as P					SM 4500-P E/P/F	10 µg/l
	Total Oil & grease					EPA 1664A	1.4/5 mg/l
	NWTPH - Dx					Ecology NWTPH Dx	250/250 µg/l
	NWTPH - Gx					Ecology NWTPH Gx	250/250 µg/l
	Calcium					EPA 200.7	10 µg/l
	Chloride					SM 4500-Cl C	0.15 µg/l
	Fluoride					SM 4500-F E	.025/0.1 mg/l
	Magnesium					EPA 200.7	10/50 µg/l
	Potassium					EPA 200.7	700/ µg/l
	Sodium					EPA 200.7	29/ µg/l

X	Parameter	Measurement Values			Number of Analyses	Analytical Method Std. Methods 19th,20th edition or EPA	Detection Limit/Quantitation Level
		Minimum	Maximum	Average			
	Sulfate					SM 4500-SO_4 C/D	/200 µg/l
	Arsenic(total)					EPA 200.8	0.1/0.5 µg/l
	Barium (total)					EPA 200.8	0.5/2 µg/l
	Cadmium (total)					EPA 200.8	.05/.25 µg/l
	Chromium (total)					EPA 200.8	0.2/1 µg/l
	Copper (total)					EPA 200.8	0.4/2 µg/l
	Lead (total)					EPA 200.8	0.1/.5 µg/l
	Mercury (total) pg/L					EPA 1631E	0.2/0.5 pg/l
	Molybdenum(total)					EPA 200.8	0.1/0.5 µg/l
	Nickel(total)					EPA 200.8	0.1/0.5 µg/l
	Selenium (total)					EPA 200.8	1/1 µg/l
	Silver (total)					EPA 200.8	.04/.2 µg/l
	Zinc (total)					EPA 200.8	0.5/2.5 µg/l

6. Does this facility use any of the following chemicals as raw materials or produce them as part of the manufacturing process, or are they present in the wastewater? ☐ YES ☒ NO

(*The number in the column next to the chemical name is the Chemical Abstract Service (CAS) reference number to aid in identifying the compound.*)

If yes, specify how the chemical is used and the quantity used or produced:

METALS, CYANIDE & TOTAL PHENOLS			
Antimony, Total	7440-36-0	Nickel, Total	7440-02-0
Arsenic, Total	7440-38-2	Selenium, Total	7782-49-2
Beryllium, Total	7440-41-7	Silver, Total	7440-22-4
Cadmium, Total	7440-43-9	Thallium, Total	7440-28-0
Chromium (hex) dissolved	18540-29-9	Zinc, Total	7440-66-6
Chromium, Total	7440-47-3		
Copper, Total	7440-50-8	Cyanide, Total	57-12-5
Lead, Total	7439-92-1	Cyanide, Weak Acid Dissociable	
Mercury, Total	7439-97-6)	Phenols, Total	

PESTICIDES			
Aldrin	309-00-2	Endrin	72-20-8
alpha-BHC	319-84-6	Endrin Aldehyde	7421-93-4
beta-BHC	319-85-7	Heptachlor	76-44-8
gamma-BHC	58-89-9	Heptachlor Epoxide	1024-57-3
delta-BHC	319-86-8	PCB-1242	53469-21-9
Chlordane	57-74-9	PCB-1254	11097-69-1
4,4'-DDT	50-29-3	PCB-1221	11104-28-2
4,4'-DDE	72-55-9	PCB-1232	11141-16-5
4,4' DDD	72-54-8	PCB-1248	12672-29-6
Dieldrin	60-57-1	PCB-1260	11096-82-5
alpha-Endosulfan	959-98-8	PCB-1016	12674-11-2
beta-Endosulfan	33213-65-9	Toxaphene	8001-35-2
Endosulfan Sulfate	1031-07-8		

VOLATILE COMPOUNDS			
Acrolein	107-02-8		
Acrylonitrile	107-13-1	1,1-Dichloroethylene	75-35-4
Benzene	71-43-2	1,2-Dichloropropane	78-87-5
Bromoform	75-25-2	1,3-dichloropropene (mixed isomers) (1,2-dichloropropylene)	542-75-6
Carbon tetrachloride	56-23-5	Ethylbenzene	100-41-4
Chlorobenzene	108-90-7	Methyl bromide (Bromomethane)	74-83-9
Chloroethane	75-00-3	Methyl chloride (Chloromethane)	74-87-3
2-Chloroethylvinyl Ether	110-75-8	Methylene chloride)	75-09-2
Chloroform	67-66-3	1,1,2,2-Tetrachloroethane	79-34-5
Dibromochloromethane	124-48-1	Tetrachloroethylene	127-18-4
1,2-Dichlorobenzene	95-50-1	Toluene (108-88-3)	
1,3-Dichlorobenzene	(541-73-1)	1,2-Trans-Dichloroethylene (Ethylene dichloride)	156-60-5
1,4-Dichlorobenzene	106-46-7	1,1,1-Trichloroethane	71-55-6
Dichlorobromomethane	75-27-4	1,1,2-Trichloroethane	79-00-5
1,1-Dichloroethane	75-34-3	Trichloroethylene	79-01-6
1,2-Dichloroethane	107-06-2	Vinyl chloride	75-01-4

ACID COMPOUNDS			
2-Chlorophenol	95-57-8	4-nitrophenol	100-02-7
2,4-Dichlorophenol	120-83-2	Parachlorometa cresol (4-chloro-3-methylphenol)	59-50-7
2,4-Dimethylphenol	105-67-9	Pentachlorophenol	87-86-5
4,6-dinitro-o-cresol (2-methyl-4,6,-dinitrophenol)	534-52-1	Phenol	108-95-2
2,4 dinitrophenol	51-28-5	2,4,6-Trichlorophenol	88-06-2
2-Nitrophenol	88-75-5		

BASE/NEUTRAL COMPOUNDS (compounds in bold are Ecology PBTs)			
Acenaphthene	83-32-9	3,3-Dichlorobenzidine	91-94-1
Acenaphthylene	208-96-8	Diethyl phthalate	84-66-2
Anthracene	120-12-7	Dimethyl phthalate	131-11-3
Benzidine	92-87-5	Di-n-butyl phthalate)	84-74-2
Benzyl butyl phthalate	85-68-7	2,4-dinitrotoluene	121-14-2
Benzo(*a*)anthracene	56-55-3	2,6-dinitrotoluene	606-20-2
Benzo(b)fluoranthene (3,4-benzofluoranthene)	205-99-2	Di-n-octyl phthalate	117-84-0
Benzo(j)fluoranthene	**205-82-3**	1,2-Diphenylhydrazine (*as Azobenzene*)	122-66-7
Benzo(k)fluoranthene (11,12-benzofluoranthene)	207-08-9	Fluoranthene	206-44-0
Benzo(r,s,t)pentaphene	**189-55-9**	Fluorene	86-73-7
Benzo(*a*)pyrene	50-32-8	Hexachlorobenzene	118-74-1
Benzo(*ghi*)Perylene	191-24-2	Hexachlorobutadiene	87-68-3
Bis(*2-chloroethoxy)*methane	111-91-1	Hexachlorocyclopentadiene	77-47-4
Bis(*2-chloroethyl*)ether	111-44-4	Hexachloroethane	67-72-1
Bis(*2-chloroisopropyl*)ether	39638-32-9	Indeno(*1,2,3-cd*)Pyrene	193-39-5
Bis(*2-ethylhexyl*)phthalate	117-81-7	Isophorone	78-59-1
4-Bromophenyl phenyl ether	101-55-3	**3-Methyl cholanthrene**	**56-49-5**
2-Chloronaphthalene	91-58-7	Naphthalene	91-20-3
4-Chlorophenyl phenyl ether	7005-72-3	Nitrobenzene	98-95-3
Chrysene	218-01-9	N-Nitrosodimethylamine	62-75-9
Dibenzo (a,j)acridine	**224-42-0**	N-Nitrosodi-n-propylamine	621-64-7
Dibenzo (a,h)acridine	**226-36-8**	N-Nitrosodiphenylamine	86-30-6
Dibenzo(a-*h*)anthracene (1,2,5,6-dibenzanthracene)	53-70-3	**Perylene**	**198-55-0**
Dibenzo(a,e)pyrene	192-65-4	Phenanthrene	85-01-8
Dibenzo(a,h)pyrene	189-64-0	Pyrene	129-00-0
		1,2,4-Trichlorobenzene	120-82-1

7. Are any other pesticides, herbicides or fungicides used at this facility? ☒ YES ☐ NO

If yes, specify the material and quantity used:

Generic weed control herbicides may be applied on site to control weed growth around the facilities. Herbicides will be applied in accordance with applicable manufacturer's recommendations and state and local regulations.

8 Are there other pollutants that you know of or believe to be present? ☒ YES ☐ NO

If yes, specify the pollutants and their concentration if known
(attach laboratory analyses if available as Attachment E8):

Additional laboratory analysis is included in Attachment E8.

9. Is the wastewater being discharged, or proposed for discharge, to the POTW designated as a dangerous waste according to the procedures in Chapter 173-303 WAC?

☐ YES ☒ NO ☐ DON'T KNOW

10. If the answer to question 9 above is yes, how did the waste designate as a dangerous waste *(check appropriate box)*?

For Listed and TCLP Characteristic Wastes only, also provide the Dangerous Waste Number(s).

Listed Waste ☐ Dangerous Waste Number(s) _____

Characteristic Wastes Dangerous Waste Number(s) _____

Ignitable ☐

Reactive ☐

Corrosive ☐

TCLP ☐

State Only Dangerous Wastes Dangerous Waste Number(s) _____

Toxicity ☐

Persistent ☐

For questions about waste designation under the *Dangerous Waste Regulations*, Chapter 173-303 WAC, contact Ecology's Hazardous Waste and Toxics Program at:

Northwest Regional Office - Bellevue	(425) 649-7000
Southwest Regional Office - Lacey	(360) 407-6300
Central Regional Office - Yakima	(509) 575-2490
Eastern Regional Office - Spokane	(509) 329-3400

SECTION F. SEWER INFORMATION

1. Is an inspection and sampling manhole or similar structure available on-site? ☒ YES ☐ NO
   If yes, attach a map or hand drawing of the facility that shows the location of these structures (Label as attachment F1 or this may be combined with map in H8, if H8 is applicable to your facility.)

SECTION G. OTHER PERMITS

1. List all environmental control permits or approvals needed for this facility; for example, air emission permits.

Vancouver Energy is required to go through the Washington State Energy Site Evaluation Council for approval. A comprehensive list of permits/approvals are provided in Part 2, Section 2.23 Pertinent Federal, State, and Local Requirements of the Application for Site Certification.

SECTION H. STORMWATER

1. Do you have coverage under the Washington State Industrial Stormwater NPDES General Permit? ☐ YES ☒ NO
   If yes, please list the permit number here. _____

   If no, have you applied for a Washington State Stormwater Industrial Stormwater General Permit? ☐ YES ☒ NO

   If you answered no to both questions above, complete the following questions 2 through 5.

2. Does your facility discharge stormwater: *(Check all that apply)*

   ☒ To storm sewer system *(provide name of storm sewer system operator:* Port of Vancouver

   ☒ Directly to any surface waters of Washington State *(e.g., river, lake, creek, estuary, ocean).*

   Specify waterbody name(s) _____

   ☒ Indirectly to surface waters of Washington State *(i.e., flows over adjacent properties first).*

   ☐ To a Sanitary Sewer

   ☐ Directly to ground waters of Washington State via:

   ☐ Dry well

   ☐ Drainfield

   ☐ Other

3. Areas with industrial activities at facility: *(check all that apply)*

   ☐ Manufacturing Building

   ☒ Material Handling

   ☒ Material Storage

   ☐ Hazardous Waste Treatment, Storage, or Disposal *(Refers to RCRA, Subtitle C Facilities Only)*

   ☐ Waste Treatment, Storage, or Disposal

   ☐ Application or Disposal of Wastewaters

   ☒ Storage and Maintenance of Material Handling Equipment

   ☒ Vehicle Maintenance

   ☐ Areas Where Significant Materials Remain

   ☒ Access Roads and Rail Lines for Shipping and Receiving

☐ Other (please specify): _____

4. Material handling/management practices

   a. Types of materials handled and/or stored outdoors: *(check all that apply)*

☐	Solvents	☐	Hazardous Wastes
☐	Scrap Metal	☐	Acids or Alkalies
☐	Petroleum or Petrochemical Products	☐	Paints/Coatings
☐	Plating Products	☐	Woodtreating Products
☐	Pesticides	☐	Other *(please list)*: _____

   b. Identify existing management practices employed to reduce pollutants in industrial stormwater discharges: *(check all that apply)*

☒	Oil/Water Separator	☐	Detention Facilities
☒	Containment	☐	Infiltration Basins
☒	Spill Prevention	☒	Operational BMPs
☐	Surface Leachate Collection	☒	Vegetation Management
☒	Overhead Coverage	☐	Other *(please list)*: _____

5. Attach a facility site map showing stormwater drainage/collection areas, disposal areas and discharge points. This may be a hand-drawn map if no other site map is available *(See example on page 16 of this application)*. *Label this as attachment H.5.*

SECTION I. OTHER INFORMATION

1. Describe liquid wastes or sludges being generated by your facility that are not disposed of in the waste stream(s) and how they are being disposed of. For each type of waste, provide type of waste and the name, address, and phone number of the hauler.

   Liquid wastes from the unloading building and marine terminal (Waste Streams 2 & 4) will be pumped from storage tanks and hauled to licensed treatment and recycling facility such as PPV Inc. Estimated concentrations of contaminates in the liquid wastes have been reviewed by PPV and a treatement plan assembled.

   Sludge accumulated from storage tanks or oil handling areas will be removed and hauled off-site when needed or a maximum of every 10-years per API Standards. Sludge will be removed by a certified oil handling company such as Safety Kleen.

2. Describe storage areas for raw materials, products, and wastes.

   Raw materials (crude oil) for the facility will be stored within fabricated steel tanks with a floating internal roof and a fixed external roof.

   Ancillary stored chemicals used on-site for maintenance operations will be stored within the buildings on-site in designated locations. Products being stored and estimated amounts are listed in Attachment C.7. No waste streams are anticipated to result from the storage of materials.

3. Have you designated the wastes described above according to the applicable procedures of Dangerous Waste Regulations, Chapter 173-303 WAC? ☐ YES ☒ NO

SECTION J. CERTIFICATIONS

1. **Approval by Publicly-Owned Treatment Works [required by WAC 173-216-070(4)(b)]**

I approve of the discharge as described in this application. The applicant is:

(Please check the appropriate box below.)

☐ A Significant Industrial User (see Definitions at the end of this Section)

☐ A Categorical Industrial User

☒ Neither of the above

Name and location of sewer system to which this project will be tributary:

City of Vancouver. Waste Streams #1 will connect to an existing 18" sewer main located immediately north of the site in NW Old Lower River Road. Waste Stream #3 will connect to an existing 18" sewer main located immediately south of the site along the Port's rail corridor.

Treatment Works Owner: City of Vancouver

Street: 4500 SE Columbia Way

City/State: Vancouver, WA Zip: 98660

Signature of Treatment Works Authority | Date | Title

Printed Name

2. **Application review by Intermediate Sewer Owner at point of discharge (if applicable)**

I hereby acknowledge that I have reviewed the application for discharge to this sewer system.

Name and location of sewer system to which this project will be tributary:

Sewer System Owner:

Street:

City/State: Zip:

Signature of Sewer System Authority | Date | Title

Printed Name

Example 1 for application section C.2. (SCHEMATIC DIAGRAM)

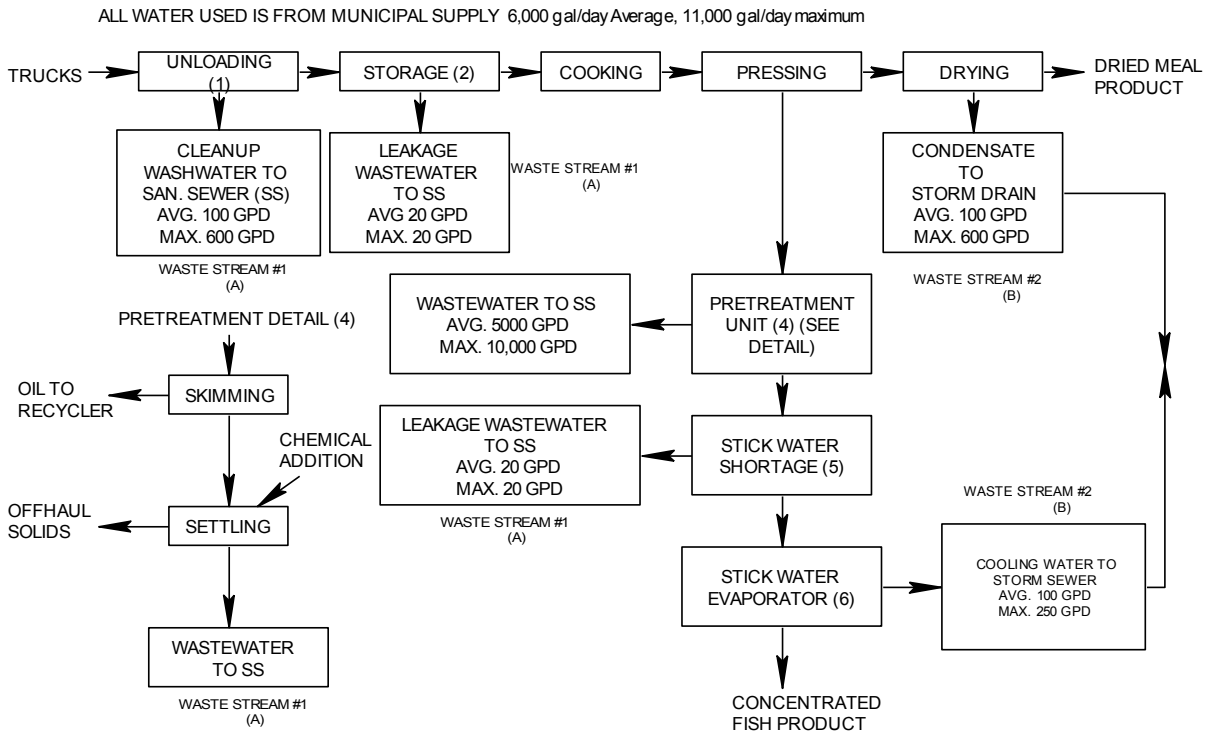

Example 2 for application section F1 or H8 (FACILITY SITE MAP)

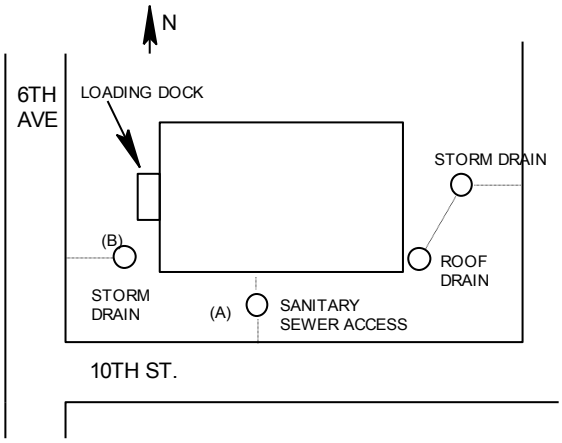

DEFINITIONS

Significant Industrial User (SIU)--

1) All industrial users subject to Categorical Pretreatment Standards under 40 CFR 403.6 and 40 CFR Chapter I, Subchapter N; and

2) Any other industrial user that: discharges an average of 25,000 gallons per day or more of process wastewater to the POTW (excluding sanitary, noncontact cooling, and boiler blow-down wastewater); contributes a process wastestream that makes up 5 percent or more of the average dry weather hydraulic or organic capacity of the POTW treatment plant; or is designated as such by the Control Authority on the basis that the industrial user has a reasonable potential for adversely affecting the POTW's operation or for violating any pretreatment standard or requirement (in accordance with 40 CFR 403.8(f)(6)).

   Upon finding that the industrial user meeting the criteria in paragraph 2, above, has no reasonable potential for adversely affecting the POTW's operation or for violating any pretreatment standard or requirement, the Control Authority may at any time, on its own initiative or in response to a petition received from an industrial user or POTW, and in accordance with 40 CFR 403.8(f)(6), determine that such industrial user is not a significant industrial user.

Control Authority - means the Washington State Department of Ecology in the case of non-delegated POTWs or means the POTW in the case of delegated POTWs.

Categoric Industrial User (CIU): An industrial user subject to national categorical pretreatment standards promulgated by EPA (40 CFR 403.6 and40 CFR parts 405-471).

Summary of Attachments That May be Required for This Application:

(Please check those attachments that are included)

☒ ☐ C.2. Production schematic flow diagram and water balance

☐ ☐ C.4. Wastewater treatment improvements

☒ ☐ C.7. Additional incidental materials

☒ ☐ E.8. Additional results of effluent testing

☒ ☐ F.1. Facility site map

☒ ☐ H.5. Stormwater drainage map

If you need this document in a format for the visually impaired, call the Water Quality Program at 360-407-6600. Persons with hearing loss can call 711 for Washington Relay Service. Persons with a speech disability can call 877-833-6341.

C.2 Production Schematic Flow Diagram and Water Balance

Copyright © BergerABAM. All Rights Reserved.

PROCESS SCHEMATIC FOR WASTEWATER DISCHARGES

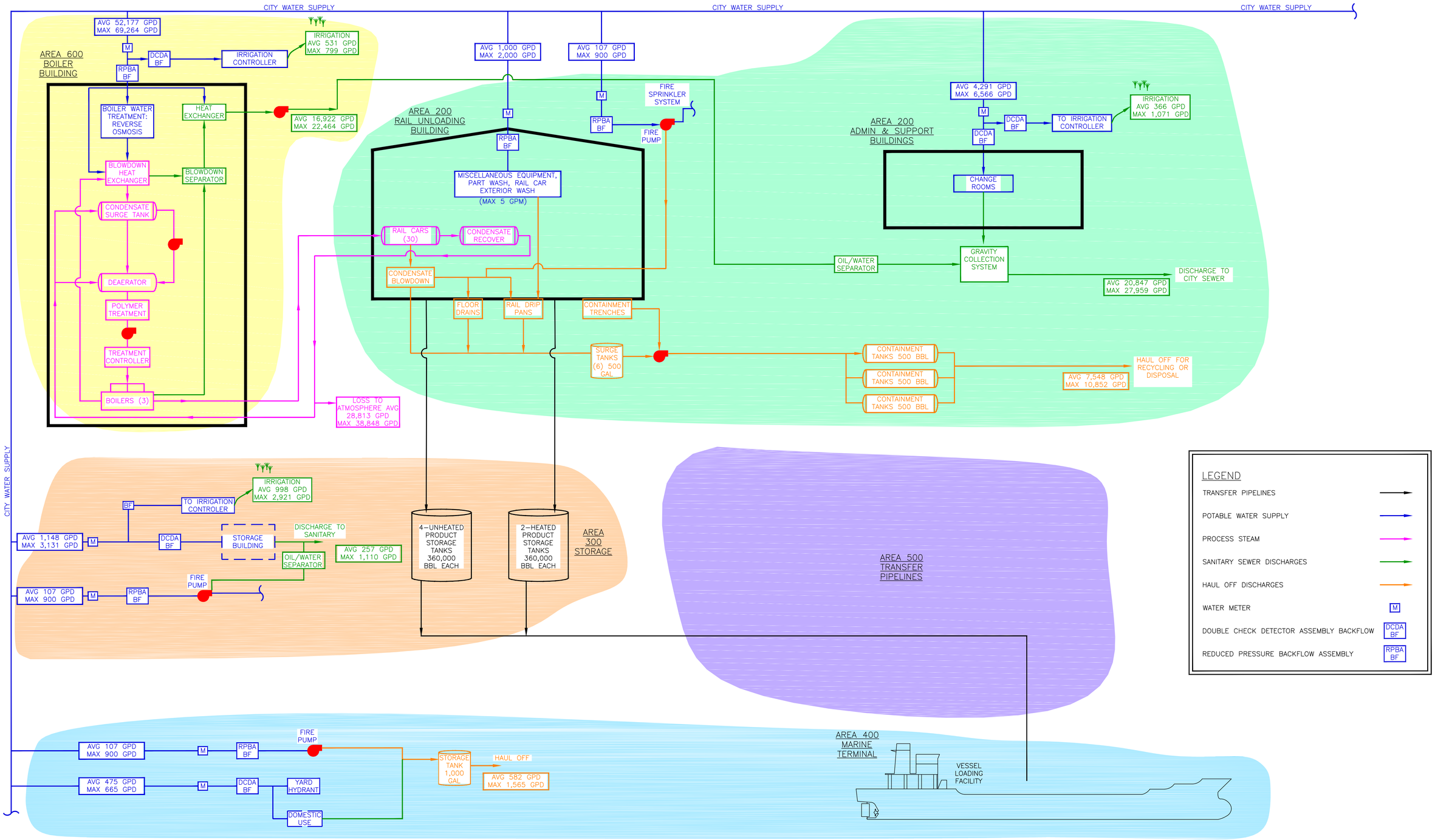

Last Saved by: Tony pritchett on: May 20, 2016 7:38 AM File: Q:\Vancouver\2013\A13.0267\00\CAD\Dwg\PRE-APP\PROCESS SCHEMATIC - WASTEWATER DISCHARGES.dwg

C.7 Materials/Quantity Stored On Site

The table below lists the incidental materials that are anticipated to be used and/or stored on site. Note that the manufacturers and trade names may differ after construction, but the types of products and their purposes are expected to be consistent with this list.

Product Trade Name	Manufacturer	MSDS Date	Max Amount On Site
Crude Oil: Bakken	Enbridge	6/8/2011	2.16 million bbl
Crude Oil: Generic	Tesoro	12/7/2012	
Crude Oil: Sour Heavy	Tesoro	2/2/2013	
Crude Oil: Sour Light	Tesoro	2/2/2013	
Crude Oil: Sweet Heavy	Tesoro	2/2/2013	
Crude Oil: Sweet Light	Tesoro	2/2/2013	
Activated Carbon	Siemens	3/18/201	TBD*
Cargill Sodium Chloride (salt)	Cargill	11/1/2012	500 lbs
CTI-220	Corrosion Technology	2/1/2011	110 gals
Diesel Low Sulfur and Ultra Low Sulfur Diesel	Tesoro	12/1/2011	500 gals
Metal Rx Leaf Media	Contech Construction Products	6/4/2010	TBD*
Mobil Actrel 1138L Cleaner	Exxon	11/21/2011	20 gals
Mobil Delvac Elite 15W-40	Exxon	6/1/2013	220 gals
Mobil Delvac Extended Life Antifreeze	Exxon	6/1/2013	275 gals
Mobil Grease CM-P	Exxon	6/1/2013	400 lbs
Mobil Grease XHP 462	Exxon	6/1/2013	120 lbs
Mobil Hydraulic AW 68	Exxon	6/1/2013	275 gals
Mobil Polyrex Eem	Exxon	6/1/2013	120 lbs
Nalco NexGuard 22310	Nalco	1/12/2011	310 gals
Nalco Tri-Act 1820	Nalco	4/5/2005	310 gals
Nalco 1720	Nalco	1/12/2011	310 gals
Nalco 8735	Nalco	1/21/2011	140 gals
PB Blaster	PB Blaster	6/1/2013	5 gals
Perlite	Supreme Perlite Company	4/1/2010	TBD*
Caprinus 40 Wt.	Shell	6/1/2013	275 gals
Mineral Spirits	Sunnyside	5/20/2005	20 gals
Simple Green Cleaner	Sunshine Makers, Inc.	1/1/2011	110 gals
Micro-Blaze CSR	Verde Environmental	1/1/2011	20 gals
WD-40	WD-40 Company	3/11/2010	5 gals
Zeolite	St. Cloud Mining Company	10/1/2006	TBD*

* Amount of material on site will be used solely within water quality treatment vaults.

Material Safety Data Sheet

1 – CHEMICAL PRODUCT AND COMPANY IDENTIFICATION

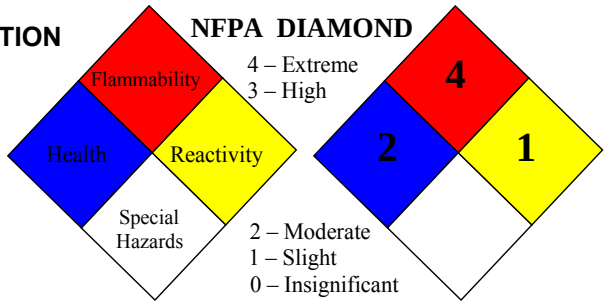

Manufacturer/Supplier: Enbridge Pipelines Inc.
10201- Jasper Avenue
Edmonton, Alberta T5J 3N7
CANADA
Product Name: Bakken Crude Oil
Synonyms: Hydrocarbons of Petroleum

General Information: 780-420-5306
Emergency Telephone Number (24 hrs): CHEMTREC 800-424-9300 USA
CANUTEC 613-996-6666 Canada
Date Prepared: 06/08/2011

2 – PRODUCT COMPOSITION/INFORMATION ON INGREDIENTS

Component	CAS Number	Normal % * by Wt./Vol.	Occupational Exposure Limits (ppm)		
			OSHA	ACGIH	NIOSH
Petroleum Hydrocarbons	68919-39-1	100	N/A	N/A	N/A
1t,2-dimethylcyclopentane	28729-52-4	1.8	None	None	None
2-methylhexane	591-76-4	1.0	None	None	None
2-methylpentane	107-83-5	1.8	None	500	100
3-methylhexane	589-34-4	1.6	None	None	None
3-methylpentane	96-14-0	1.3	None	500	100
2-methylheptane	592-27-8	1.4	None	300	None
Benzene	71-43-2	0.4	1	0.5	0.1
cyclohexane	110-82-7	1.0	300	100	300
i-pentane	109-66-0	1.8	1000	600	120
methylcyclohexane	108-87-2	2.3	500	400	400
methylcyclopentane	96-37-7	2.2	None	None	None
n-butane	106-97-8	1.9	800	1000	800
n-heptane	142-82-5	3.4	500	400	85
n-Hexane	110-54-3	3.4	50	50	50
n-Pentane	109-66-0	3.4	600	600	120
n-octane	111-65-9	3.0	500	300	75

n-nonane	111-84-2	2.2	None	200	200
n-decane	124-18-5	2.0	None	None	None
n-undecane	1120-21-4	1.7	None	None	None
n-dodecane	112-40-3	1.5	None	None	None
n-tridecane	629-50-5	1.3	None	None	None
Toluene	108-88-3	0.9	100	20	100
Hydrogen sulfide	7783-06-4	<0.00001	$20^{Ceiling}$	1	$10^{Ceiling}$
Ethylbenzene	100-41-4	0.6	100	20	100
Xylenes	1330-20-7	0-5	100	100	100

* Values do not reflect absolute minimums and maximums; those values may vary from time to time.
N/A - Not Available

---

3 – HAZARDS IDENTIFICATION

Flammability: Flammable liquid and vapor. Keep away from heat, sparks, flames or other sources of ignition (such as static electricity, pilot lights, mechanical/electrical equipment).
HMIS Classification for Flammability: 4

Stability: Stable under normal conditions. Avoid all sources of ignition.
HMIS Classification for Reactivity: 1

Potential Health Effects from Overexposure

Acute Effects:

Ingestion: Ingestion may result in nausea, vomiting, diarrhea and central nervous system depression. Aspiration of liquid into the lungs must be avoided as even small quantities in the lungs can produce chemical pneumonitis, pulmonary edema/hemorrhage and even death.

Skin Contact: Prolonged and repeated contact may cause defattting and drying of the skin and can lead to irritation and/or dermatitis.

Eye Contact: Liquid or vapor contact may cause mild eye irritation, including stinging, watering, redness and swelling. Hydrogen sulfide (H_2S) may cause burning or tearing and visual disturbances at repeated exposures above the TLV.

Inhalation: Prolonged or excessive exposure may cause irritation to the nose, throat, lungs and respiratory tract and may lead to headache, nausea, drowsiness, fatigue, pneumonitis, pulmonary edema, CNS depression, coma and respiratory arrest.

Chronic Health Effects from Overexposures:
Skin and eye irritation. May affect the respiratory and central nervous systems.

Special Toxic Effects:

n-Hexane (CAS 110-54-3)

Target Organs – Excess exposure to n-hexane can result in peripheral neuropathies. The initial symptoms are symmetrical sensory numbness and paresthesia of distal portions of the extremities. Motor weakness is typically observed in muscles of the toes and fingers but may also involve muscles of the arms, thighs and forearms. The onset of these symptoms may be delayed for several months to a year after the beginning of exposure. The neurotoxic properties of n-hexane are potentiated by exposure to methyl ethyl ketone and methyl isobutyl ketone. Prolonged exposure to high concentrations of n-hexane (>1,000 ppm) has resulted in decreased sperm count and degenerative changes in the testes of rats but not those of mice.

Benzene (CAS 71-43-2)

Carcinogenicity: Benzene is a known animal carcinogen and is known to produce leukemia in humans. Benzene has been identified as a human carcinogen by NTP, IARC and OSHA.

---

4 – FIRST AID MEASURES

Ingestion: Aspiration hazard. Do not induce vomiting or give anything by mouth because this material can enter the lungs and cause severe damage. Obtain immediate medical attention. If spontaneous vomiting occurs, lean victim forward to reduce the risk of aspiration.

Skin Contact: Wipe material from skin and remove contaminated clothing. Cleanse affected areas thoroughly by washing with mild soap and water and, if necessary, a waterless skin cleanser. If irritation or redness develops, seek medical attention.

Eye Contact: If irritation or redness develops, move victim away from exposure and into fresh air. Flush eyes with clean water for 15 minutes, with eyelids held open. If symptoms persist, seek medical attention.

Inhalation: If respiratory symptoms or other symptoms of exposure develop, move victim away from source of exposure and into fresh air. If symptoms persist, seek immediate medical attention. If victim is not breathing, clear airway and immediately begin artificial respiration. If breathing difficulties develop, qualified personnel should administer oxygen. Seek immediate medical attention.

Notes to Physician: Epinephrine and other sympathomimetic drugs may initiate cardiac arrhythmias in persons exposed to high concentrations of this material (e.g., in enclosed spaces or with deliberate abuse). The use of other drugs with less arrhythmogenic potential should be considered. If sympathomimetic drugs are administered, observe for development of cardiac arrhythmias.

---

5 – Exposure Controls/ Personal Protection

Eye Protection: Safety glasses or goggles are recommended when there is a possibility of splashing or spraying.

Skin Protection: The use of gloves (nitrile or neoprene) is advised to prevent skin contact and possible irritation. Depending on conditions, the use of an apron or chemical protective clothing may be necessary.

Respiratory Protection: A NIOSH certified air purifying respirator with an organic vapor cartridge may be used under conditions where airborne concentrations of hydrocarbons are expected to exceed exposure limits. Protection provided by air purifying respirators is limited. Use a positive pressure air supplied respirator if there is a potential for an uncontrolled release, exposure levels are not known or any other circumstances where air purifying respirators

may not provide adequate protection. A respiratory protection program that meets US OSHA's 29 CFR 1910.134, Canadian Labour Code Part II and ANSI Z88.2 requirements must be followed when workplace conditions warrant a respirator's use.

Engineering Controls: If current ventilation practices are not adequate to maintain airborne concentrations below the established exposure limits, additional ventilation or exhaust systems may be required. Where explosive mixtures may be present, electrical systems safe for such locations must be used (see appropriate electrical codes).

---

6 – FIRE FIGHTING MEASURES

Flash Point:	< 40 °C	Lower Explosive Limit:	Not Established
Auto Ignition Temperature:	Not data available	Upper Explosive Limit:	Not Established

Basic Fire Fighting Procedures: Long-duration fires involving diluent stored in tanks may result in a boilover. The contents of the tank may be expelled beyond the containment dikes or ditches. All personnel should be kept back a safe distance when a boilover is anticipated (reference NFPA 11). For fires beyond the incipient stage, emergency responders in the immediate hazard area should wear bunker gear. When the potential chemical hazard is unknown, in enclosed or confined spaces or when explicitly required by DOT, a self-contained breathing apparatus should be worn. In addition, wear other appropriate protective equipment as conditions warrant. Isolate immediate hazard area, keep unauthorized personnel out. Stop spill/release if it can be done with minimal risk. Move undamaged containers from immediate hazard area if it can be done with minimal risk. Water spray may be useful in minimizing or dispersing vapors. Cool equipment exposed to fire with water, if it can be done with minimal risk. Avoid spreading burning liquid with water used for cooling purposes.

Extinguishing Media: Any extinguisher capable of handling Class B fires is recommended, including extinguishing media such as CO_2, dry chemical or foam. Water spray is recommended to cool or protect exposed materials or structures. Water may be ineffective for extinguishment, unless used under favorable conditions by experienced fire fighters. Carbon dioxide can displace oxygen. Use caution when applying carbon dioxide in confined spaces. Firefighting should be attempted only by those who are adequately trained and equipped with proper personal protective equipment.

Unusual Fire and Explosion Hazards: This material is flammable and may be ignited by heat, sparks, flames or other sources of ignition (such as static electricity, pilot lights, or mechanical/electrical equipment). Vapors may travel considerable distances to a source of ignition where they can ignite, flashback or explode. May create vapor/air explosion hazard indoors, outdoors or in sewers. Vapors are heavier than air and can accumulate in low areas. If container is not properly cooled, it can rupture in the heat of a fire.

---

7 – ACCIDENTAL RELEASE MEASURES

Personal precautions: Keep public away. Isolate and evacuate area. Shut off source if safe to do so. Eliminate all ignition sources.

Spill management: Wear appropriate breathing apparatus (if applicable) and protective clothing. A vapor suppressing foam may be used to reduce vapors. Try to work upwind of spill. Dike and contain land spills; contain water spills by booming. For large spills remove by mechanical means such as vacuuming or pumping and place in containers. All equipment used when

handling the product must be grounded. Recover and return free product to proper containers. Use suitable absorbent materials such as vermiculite, sands, soil, or clay to clean up residual liquids. Do not wash spills into sewers or other public water systems.

Reporting: Report spills to local or federal authorities as appropriate or required.

---

8 – HANDLING AND STORAGE

The use of explosion-proof equipment is recommended and may be required (see appropriate fire codes). Do not enter confined spaces such as tanks or pits without following proper entry procedures. The use of appropriate respiratory protection is advised when concentrations exceed any established exposure limits.

Use appropriate grounding and bonding practices. Stores in properly closed containers that are appropriately labeled and in a cool well-ventilated area. Do not expose to hear, open flames, strong oxidizers or other sources of ignition. Do not cut drill, grind or weld on empty containers since they may contain explosive residues.

Harmful concentrations of hydrogen sulfide (H_2S) gas can accumulate in excavations and low-lying areas as well as the vapor space of storage and bulk transport compartments. Stay upwind and vent open hatches before uploading.

Avoid skin contact. Exercise good personal hygiene including removal of soiled clothing and prompt washing with soap and water.

---

9 – PHYSICAL AND CHEMICAL PROPERTIES

Appearance:	Clear to brown liquid
Physical Form:	Liquid
Substance type (Pure/Mixture):	Mixture
Boiling Temperature:	94 to 1330 ºF
Melting Temperature:	Not determined
Vapor Pressure:	about 7.47 psi
Vapor Density:	1.0 - 3.9
Evaporation Rate:	(Ethyl ether =1) >1
Specific Gravity:	0.82
Water Solubility:	Negligible
pH:	Not determined
Viscosity:	5.43 mm^2/s
Color:	Clear to brown
Odor:	Rotten egg, petroleum like odor

---

10 – STABILITY AND REACTIVITY

CONDITIONS TO AVOID:	Excessive heat, sources of ignition, sparks, open flames, and buildup of static electricity.
CHEMICAL STABILITY:	Stable at 70 °F, 760 mmHg pressure.
HAZARDOUS DECOMPOSITION PRODUCTS:	Combustion produces carbon monoxide, aldehydes, aromatic and other hydrocarbons.
HAZARDOUS POLYMERIZATION:	Will not occur
INCOMPATIBILITY:	Strong oxidizers such as nitrates, chlorates, peroxides.

---

11 – TOXICOLOGICAL INFORMATION– CHRONIC AND ACUTE HEALTH HAZARDS

This product contains aliphatic naphatha at a level of >0.1%. Lifetime skin painting studies in mice with similar naphthas have shown wither negative or very weak dermal carcinogenic activity following prolonged and repeated skin contact. Some other petroleum fractions that show carcinogenic activity when tested at nonirritating dose levels did not show any significant carcinogenic activity indicating that this tumorigenic response is likely related to chromic irritation and not dose. Some components of aliphatic naphthas, i.e., paraffins and olefins, have been shown to produce a species specific, sex hormonal dependent kidney damage develops via the formation of alpha-2u-globulin, a mechanism unique to the male rat. Humans do not for alpha-2u-globulin; therefore, the kidney effects resulting from this mechanism are not relevant in humans.

This product contains benzene at a level of 0.1%. Repeated or prolonged exposure to benzene at concentrations in excess of the TLV may cause serious injury to blood-forming organs. Significant chronic exposure to benzene vapor has been reported to produce various blood disorders ranging from anemia to certain forms of leukemia (cancer) in man. Benzene produced tumors in rats and mice in lifetime chronic toxicity studies, but the response has not been consistent across species, strain, sex or route of exposure. Animal studies on benzene have demonstrated immune toxicity, chromosomal aberrations, testicular effects and alterations in reproductive cycles and embryo/fetotoxicity, but not teratogenicity.

Hydrogen sulfide gas (H_2S) is toxic by inhalation. Prolonged breathing of 50-100 ppm H_2S vapors can produce eye and respiratory tract irritation. Higher concentration (250-600 ppm) for 15-30 minutes can produce headache, dizziness, nervousness, nausea and pulmonary edema or bronchial pneumonia. Concentrations of >1000 ppm will cause immediate unconsciousness and death through respiratory paralysis. Rats and mice exposed to 80 ppm H_2S, 6 hrs/day, 5 days/week for 10 weeks, did not produce any toxicity except for irritation of nasal passages. H_2S did not affect reproduction and development (birth defects or neurotoxicity) in rats exposed to concentrations of 75-80 ppm or 150 ppm H_2S, respectively. Over the years a number of acute cases of H_2S poisoning have been reported. Complete and rapid recovery is the general rule. However, if the exposure was sufficiently intense and sustained causing cerebral hypoxia (lack of oxygen to the brain), neurologic effects such as amnesia, intention tremors or brain damage are possible.

This product may contain hexane at a level of >1.0%. Studies in laboratory animals have produced systemic toxicity in blood, spleen and lungs. Fetotoxicity has been observed at hexane concentrations that produced maternal toxicity. Long term exposure to high concentrations of hexane has been shown to cause testicular effects and nervous system damage.

This product may contain xylenes at a level of >1.0%. Gross overexposure or severe poisoning incidents in humans to xylenes has been reported to cause lung, liver, kidney, heart and brain damage as well as neurologic disturbances. Laboratory animals exposed to high dose of xylenes showed evidence of effects in the liver, kidneys, lungs, spleen, heart and adrenals, Exposure of pregnant rats, mice and rabbits during gestation to significant concentrations of xylenes produced maternal, fetal and developmental toxicity (skeletal retardation, cleft palate, and wavy ribs) generally at maternally toxic doses. These types of fetotoxic effects have been associated with maternal toxicity. Repeated inhalation of high xylene concentrations has shown impairment of performance abilities (behavioral tests) in animals and man. Xylenes produced a mild frequency hearing loss in rats subchronically exposed to high concentrations of xylenes.

---

12 – DISPOSAL INFORMATION

Container contents should be completely used and containers should be emptied prior to discard. Container could be considered a RCRA hazardous waste and must be disposed of with care and in full compliance with federal, state and local regulations. Larger empty containers, such as drums, should be returned to the distributor or to a drum re-conditioner. To assure proper disposal of smaller empty containers, consult with state and local regulations and disposal authorities. This product, if it must be discarded, may meet the criteria of a hazardous waste as defined by US EPA RCRA (40 CFR 261), Environment Canada, or other State, Provincial, and local regulations. If this product is classified as a hazardous waste, federal law

requires disposal at a licensed hazardous waste disposal facility. This product could also contain benzene at >0.5 ppm and could exhibit the characteristic of “toxicity” (D018) as determined by the toxicity characteristic leaching procedure (TCLP). This material could become a hazardous waste if mixed or contaminated with a hazardous waste or other substance(s). It is the responsibility of the user to consult federal, state and local waste regulations to determine appropriate disposal options.

---

13 – ENVIRONMENTAL INFORMATION

Spill or Release to the Environment: Keep all sources of ignition and hot metal surfaces away from spill/release. The use of explosion-proof equipment is recommended. Stay upwind and away from spill/release. Notify persons downwind of spill/release, isolate immediate hazard area and keep unauthorized personnel out. Product may release large amounts of flammable vapors (e.g., methane, ethane and propane) at or below ambient temperature depending on source and process conditions. Stop spill/release if it can be done with minimal risk. Wear appropriate protective equipment including respiratory equipment as conditions warrant. Prevent spilled material from entering sewers, storm drains, other unauthorized treatment drainage systems and natural waterways. Dike far ahead of spill for later recovery or disposal. Use foam on spills to minimize vapors. Spilled material may be absorbed into an appropriate absorbent material.

Notify fire authorities and appropriate federal, state (provincial) and local agencies. Immediate cleanup of any spill is recommended. If spill of any amount into navigable waters, notify appropriate federal, state (provincial) and local agencies.

Sara Title III Information: This material contains the following chemicals subject to the reporting requirements of SARA 313 and 40 CFR 372:

Toluene	CAS – 108-88-3	Weight % - 0 – 2%
n-Hexane	CAS – 110-54-3	Weight % - up to 11%
Benzene	CAS – 71-43-2	Weight % - 0 – 2%

---

14 – REGULATORY INFORMATION

USA: All of the components of this product are on the Toxic Substances Control Act (TSCA) Chemical Inventory.

Canada: All the components of this product are on the Canadian Domestic Substances List (DSL), or have been notified under the New Substances Notification Regulations, but have not yet been published in the Canada Gazette.

This product has been classified in accordance with the hazard criteria of the Controlled Products Regulations (CPR) and the MSDS contains all the information required by the CPR.

WHMIS Classification:	Class B2 Flammable Liquids Class D2B Other Toxic Effects - Skin Irritant Class D2A Other Toxic Effects – Embryotoxic/Fetotoxic
US EPA Reportable Quantity:	The estimated reportable quantity (RQ) for this material is based on the weight % shown below:
RQ based on benzene –	The RQ for benzene is 10 pounds, which equals 3,333 pounds of natural gas condensate (556 gallons). The RQ is based on 0.3 wt. % benzene.
RQ based on n-Hexane –	The RQ for n-Hexane is 5000 pounds, which equals 50,000 pounds of natural gas condensate (8,333 gallons). The RQ is based on 10 wt. % n-Hexane.
RQ based on toluene –	The RQ for toluene is 1000 pounds, which equals 50,000 pounds of natural gas condensate (8,333 gallons). The RQ is based on 2 wt. % toluene.

---

15 – SPECIAL PRECAUTIONS / SUPPLEMENTAL INFORMATION

Keep containers tightly closed. Use and store this material in cool, dry, well-ventilated areas away from heat, direct sunlight, hot metal surfaces and all sources of ignition. Post area “No Smoking or Open Flame”. Store only in approved containers. Keep away from any incompatible material. Protect container(s) against physical damage. Outdoor or detached storage is preferred. Indoor storage should meet US OSHA standards, Canadian Labour Codes and other appropriate fire codes.

Depending on the source of natural gas condensate, there could be some amount of NORM (naturally occurring radioactive materials) in the scale, deposit and sludge associated with this material. Proper measurements should be taken prior to handling this material or any equipment contaminated with this material. If NORM is indicated, refer to API Bulletin E2, “Bulletin on Management of Naturally Occurring Radioactive Materials in Oil and Gas Production,” for additional information.

Empty Containers: “Empty” containers retain residue and may be dangerous. Do not pressurize, cut, weld, braze, solder, drill, grind or expose such containers to heat, flame, sparks or other sources of ignition. They may explode and cause injury or death. “Empty” drums should be completely drained, properly bunged and promptly shipped to the supplier or a drum re-conditioner. All containers should be disposed of in an environmentally safe manner and in accordance with governmental regulations.

Before working on or in tanks which contain or have contained this material, refer to OSHA regulations, ANSI Z49.1 and other governmental and industrial references pertaining to cleaning, repairing, welding or other contemplated operations.

---

16 – TRANSPORTATION REQUIREMENTS

General Transportation Information:

DOT Proper Shipping Name (49 CFR 172.101):	Petroleum Crude Oil
DOT Hazard Classes (49 CFR 172.101):	3
UN/NA Code (49 CFR 172.101):	UN1267
Packing Group (49 CFR 172.101):	II
Bill of Lading Description (49 CFR 172.202):	Petroleum Crude Oil
DOT Labels Required (49 CFR 172.101):	Flammable Liquid

Please note that the actual shipping name and associated data can vary due to the properties of the product. Other acceptable shipping names may include Petroleum Distillate n.o.s. 1268, Gasoline UN1203, Flammable liquids, n.o.s. (pentane) UN1993 or Hydrocarbons, Liquid n.o.s. (condensate) UN3295.

PREPARED BY: Enbridge Pipelines Inc.

Disclaimer

The information presented herein is based on data considered to be accurate as of the date of preparation of this Material Safety Data Sheet (MSDS). However, MSDS’s may not be used as a commercial specification sheet of manufacturer or seller, and no warranty or representation, express or implied, is made as to the accuracy or completeness of the foregoing data and safety information, nor is any authorization given or implied to practice any patented invention without a license. In addition, no responsibility can be assumed by vendor for any damage or injury resulting from abnormal use, from any failure to adhere to recommended practices or from any hazards inherent in the nature of the product.

ABBREVIATIONS

ACGIH	American Conference of Governmental Industrial Hygienists
ASTM	American Society for Testing and Materials
CAS	Chemical Abstract Service
CERCLA	Comprehensive Environmental Response, Compensation and Liability Act
CFR	Code of Federal Regulations
HMIS	Hazardous Materials Identification System
IARC	International Agency for Research on Cancer
m^3	Cubic meter
NIOSH	National Institute for Occupational Safety and Health
NTP	National Toxicology Program
n.o.s.	Not Otherwise Specified
OSHA	Occupational Safety and Health Administration
PEL	Permissible Exposure Limit
REL	Recommended Exposure Limit
SARA	Superfund Amendments and Reauthorization Act
TLV	Threshold Limit Value
TSCA	Toxic Substance Control Act
TWA	Time Weighted Average

Safety Data Sheet
Crude Oil

NFPA:

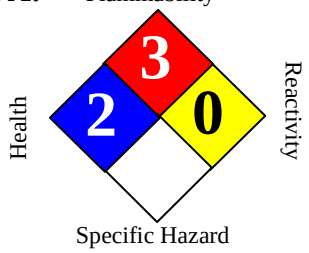

SECTION 1. PRODUCT AND COMPANY IDENTIFICATION

Product name	:	Crude Oil			
Synonyms	:	Sour Crude Oil, Sweet Crude Oil, Light Crude Oil, Heavy Crude Oil, Generic Crude Oil, 888100008800			
SDS Number	:	888100008800	**Version**	:	1.7
Product Use Description	:	Refining feedstock			
Company	:	For: Tesoro Refining & Marketing Co. 19100 Ridgewood Parkway, San Antonio, TX 78259			
Tesoro Call Center	:	(877) 783-7676	**Chemtrec (Emergency Contact)**	:	(800) 424-9300

SECTION 2. HAZARDS IDENTIFICATION

Classifications

Flammable Liquid – Category 2 or 3 depending on variable composition.
Aspiration Hazard – Category 1.
Carcinogenicity – Category 2
Specific Target Organ Toxicity (Repeated Exposure) – Category 2
Specific Target Organ Toxicity (Single Exposure) – Category 3
Eye Irritant – Category 2B
Chronic Aquatic Toxicity – Category 2

Pictograms

Signal Word **Danger**

Hazard Statements

Highly flammable liquid and vapor.
May be fatal if swallowed and enters airways – do not siphon gasoline by mouth.
Suspected of causing cancer if repeated over-exposure by inhalation and/or skin contact occurs.
May cause damage to liver, kidneys and nervous system by prolonged and repeated inhalation or skin contact.
Causes eye irritation. Can be absorbed through skin.

Repeated or prolonged skin contact can cause irritation and dermatitis.
May cause drowsiness or dizziness.
Harmful to aquatic life.
May release hydrogen sulfide (H2S) gas, a toxic-by-inhalation material. See Section 11.

Precautionary statements

Prevention

Obtain special instructions before use.
Do not handle until all safety precautions have been read and understood.
Keep away from heat, sparks, open flames, welding and hot surfaces.
No smoking.
Keep container tightly closed.
Ground and/or bond container and receiving equipment.
Use explosion-proof electrical equipment.
Use only non-sparking tools (if tools are used in flammable atmosphere).
Take precautionary measures against static discharge.
Wear gloves, eye protection and face protection (as needed to prevent skin and eye contact with liquid).
Wash hands or liquid-contacted skin thoroughly after handling.
Do not eat, drink or smoke when using this product.
Do not breathe vapors.
Use only outdoors or in a well-ventilated area.

Response

In case of fire: Use dry chemical, CO2, water spray or fire-fighting foam to extinguish.
If swallowed: Immediately call a poison center, doctor, hospital emergency room, medical clinic or 911. Do NOT induce vomiting. Rinse mouth.
If on skin (or hair): Take off immediately all contaminated clothing. Rinse skin with water/shower.
If in eye: Rinse cautiously with water for several minutes. Remove contact lenses, if present and easy to do. Continue rinsing.
If skin or eye irritation persists, get medical attention.
If inhaled: Remove person to fresh air and keep comfortable for breathing.
Get medical attention if you feel unwell.

Storage

Store in a well-ventilated place. Keep cool. Store locked up. Keep container tightly closed . Use only approved containers.

Disposal

Dispose of contents/containers to approved disposal site in accordance with local, regional, national, and/or international regulations.

SECTION 3. COMPOSITION/INFORMATION ON INGREDIENTS

Component	CAS-No.	Weight %
Petroleum; Crude oil	8002-05-9	100%
N-hexane	110-54-3	0 - 1.5%
Hydrogen Sulfide	7783-06-4	Variable

Sulfur	7704-34-9	Trace - 5%
Benzene	71-43-2	0.1 - 3%
Cumene	98-82-8	Variable Trace < 1%
Naphthalene	91-20-3	Variable Trace < 1%
Xylene	1330-20-7	Variable Trace < 1%
Ethylbenzene	100-41-4	Variable Trace < 1%
Polycyclic Aromatic Compounds		Variable
Toluene	108-88-3	Variable Trace < 1%

SECTION 4. FIRST AID MEASURES

Inhalation : Move to fresh air. Administer oxygen or artificial respiration if needed. Seek medical attention immediately.

Skin contact : Take off all contaminated clothing immediately. Wash off immediately with soap and plenty of water. Seek medical attention if irritation or skin thermal burns occur.

Eye contact : In case of eye contact, immediately flush with low pressure, cool water for at least 15 minutes, opening eyelids to ensure flushing. Hold the eyelids open and away from the eyeballs to ensure that all surfaces are flushed thoroughly. Seek medical attention immediately.

Ingestion : Do NOT induce vomiting. Never give anything by mouth to an unconscious person. Seek medical attention immediately. If vomiting does occur naturally, keep head below the hips to reduce the risks of aspiration. Small amounts of material which enter the mouth should be rinsed out until the taste is dissipated.

SECTION 5. FIRE-FIGHTING MEASURES

Suitable extinguishing media : SMALL FIRES: Any extinguisher suitable for Class B fires, dry chemical, CO2, water spray, fire fighting foam. LARGE FIRES: Water spray, fog or fire fighting foam. Water may be ineffective for fighting the fire, but may be used to cool fire-exposed containers.

Specific hazards during fire fighting : Vapors are heavier than air and may travel long distances to a point of ignition and flash back. Do not allow liquid runoff to enter sewers or public waters. Gas may form explosive mixture with air.

Special protective equipment for fire-fighters : Use NIOSH/MSHA approved positive pressure self-contained breathing apparatus and fully protective clothing such as bunker gear if needed to prevent exposure.

Further information : Isolate area, particularly around ends of storage vessels. Cool tanks, shells, and containers exposed to fire and excessive heat with water. For massive fires the use of unmanned hose holders or monitor nozzles may be advantageous to further minimize personnel exposure. Major fires may require withdrawal, allowing the tank to burn. Large storage tank fires typically require specially trained personnel and equipment to extinguish the fire, often including the need for properly applied fire fighting foam.

SECTION 6. ACCIDENTAL RELEASE MEASURES

Personal precautions : Evacuate nonessential personnel and remove or secure all ignition sources. Consider wind direction; stay upwind and uphill, if possible. Evaluate the direction of product travel, diking, sewers, etc. to contain spill areas.

Environmental precautions : Carefully contain and stop the source of the spill, if safe to do so. Protect bodies of water by diking, absorbents, or absorbent boom, if possible. Do not flush down sewer or drainage systems, unless system is designed and permitted to handle such material. The use of fire fighting foam may be useful in certain situations to reduce vapors.

Methods for cleaning up : Take up with sand or oil absorbing materials. Carefully shovel, scoop or sweep up into a waste container for reclamation or disposal - caution, flammable vapors may accumulate in closed containers. Response and clean-up crews must be properly trained and must utilize proper protective equipment (see Section 8).

SECTION 7. HANDLING AND STORAGE

Precautions for safe handling : Handle as a combustible liquid. Keep product and empty containers away from fire, sparks and heated surfaces. Electrical equipment should be approved for classified area. Bond and ground containers during product transfer to reduce the possibility of static-initiated fire or explosion.

Conditions for safe storage, including incompatibilities : Keep away from flame, sparks, excessive temperatures and open flame. Use approved vented containers. Keep containers closed and clearly labeled. Empty product containers or vessels may contain explosive vapors. Do not pressurize, cut, heat, weld or expose containers to sources of ignition. Store in a well-ventilated area. This storage area should comply with NFPA 30 "Flammable and Combustible Liquid Code". Avoid storage near incompatible materials. The cleaning of tanks previously containing this product should follow API Recommended Practice (RP) 2013 "Cleaning Mobile Tanks In Flammable and Combustible Liquid Service" and API RP 2015 "Cleaning Petroleum Storage Tanks".

SECTION 8. EXPOSURE CONTROLS / PERSONAL PROTECTION

Exposure Guidelines

List	Components	CAS-No.	Type:	Value
OSHA	Benzene	71-43-2	TWA	1 ppm
		71-43-2	STEL	5 ppm
		71-43-2	OSHA_AL	0.5 ppm
	N-hexane	110-54-3	PEL	500 ppm 1,800 mg/m3
	Hydrogen sulfide	7783-06-4	STEL	20 ppm
	Cumene	98-82-8	TWA	50 ppm
	Ethylbenzene	100-4-4	TWA	100 ppm
	Naphthalene	91-20-3	TWA	10 ppm
	Toluene	108-88-3	TWA	200 ppm
	Xylenes	1330-20-7	TWA	100 ppm

			Ceiling	300 ppm
	Polycyclic Aromatic Compound (Benzene Soluble)		TWA	0.2 mg/m3
ACGIH	N-hexane	110-54-3	TWA	50 ppm
	Hydrogen Sulfide	7783-06-4	TWA	1 ppm
		7783-06-4	STEL	5 ppm
	Benzene	71-43-2	TWA	0.5 ppm
		71-43-2	STEL	2.5 ppm
	Cumene	98-82-8	TWA	50 ppm
	Ethylbenzene	100-4-4	TWA	50 ppm
		100-4-4	STEL	125 ppm
	Naphthalene	91-20-3	TWA	10 ppm
		91-20-3	STEL	15 ppm
	Toluene	108-88-3	TWA	20 ppm
	Xylenes	1330-20-7	TWA	100 ppm
		1330-20-7	STEL	150 ppm
	Polycyclic Aromatic Compound (Benzene Soluble)		TWA	0.2 mg/m3

Engineering measures : Use adequate ventilation to keep gas and vapor concentrations of this product below occupational exposure and flammability limits, particularly in confined spaces.

Eye protection : Ensure that eyewash stations and safety showers are close to the workstation location. Goggles, and face shield or full facepiece pressure-demand supplied air respirator as needed to prevent eye and face contact.

Hand protection : Gloves constructed of nitrile, neoprene, or PVC are recommended. The resistance of specific material may vary from product to product as well as with degree of exposure.

Skin and body protection : Chemical protective clothing such as DuPont TyChem ®, Barricade or equivalent, recommended based on degree of exposure.

Respiratory protection : A NIOSH/ MSHA-approved air-purifying respirator with organic vapor cartridges or canister may be permissible under certain circumstances where airborne concentrations are or may be expected to exceed exposure limits or for odor or irritation. Protection provided by air-purifying respirators is limited. Refer to OSHA 29 CFR 1910.134, ANSI Z88.2-1992, NIOSH Respirator Decision Logic, and the manufacturer for additional guidance on respiratory protection selection. Use a NIOSH/ MSHA-approved positive-pressure supplied-air respirator if there is a potential for uncontrolled release, exposure levels are not known, in oxygen-deficient atmospheres, or any other circumstance where an air-purifying respirator may not provide adequate protection.

Hygiene measures	:	Avoid repeated and/or prolonged skin exposure. Wash hands before eating, drinking, smoking, or using toilet facilities. DO NOT use gasoline, kerosene, solvents, or harsh abrasive skin cleaners to clean skin. Waterless hand cleaners are effective. Promptly remove contaminated clothing and launder before reuse. Consider the need to discard contaminated leather shoes and gloves. Use good personal hygiene practices.

SECTION 9. PHYSICAL AND CHEMICAL PROPERTIES

Appearance	:	Typical is a thick, dark yellow to brown or greenish black liquid
Odor		Petroleum asphalt odor. Hydrogen sulfide (H2S) has a characteristic rotten egg odor with an odor threshold as low as 10 parts per billion or even less. However, this odor should not be used as a warning property because H2S can deaden the sense of smell. H2S concentrations can be measured with an H2S meter or colorimetric indicating tubes.
Odor threshold		Odor threshold varies with the composition of the crude oil
pH		Not applicable
Melting point/freezing point		-30° to 30°C has been reported as a pour point
Initial boiling point & range		Distillation is typically not performed above 300°C at atmospheric pressure
Flash point		-7 to 75°C
Evaporation rate		Higher initially and declines if lighter components evaporate
Flammability (solid, gas)		Flammable gas or vapors released by liquid
Upper explosive limit		Varies with composition but typical is approximately 7%
Lower explosive limit		Varies with composition but typical is approximately 0.7%
Vapor pressure		6 to 45 kPa
Vapor density (air = 1)		No data available
Relative density (water = 1)		0.8 to 1.0 g/mL is typical at 15°C
Solubility (in water)		1 to 2% by weight is maximum reported for soluble components of crude oil
Partition coefficient (n-octanol/water)		2 to > 6 as log Pow
Auto-ignition temperature		Varies with composition
Decomposition temperature		Will evaporate or boil and possibly ignite before decomposition occurs
Kinematic viscosity		5 to > 1300 mm^2/s at 38°C

SECTION 10. STABILITY AND REACTIVITY

Reactivity	Vapors may form explosive mixture with air. Hazardous polymerization does not occur.
Chemical stability	Stable under normal conditions.
Possibility of hazardous reactions	Can react with strong oxidizing agents, peroxides, acids and alkalies.

Conditions to avoid	Avoid high temperatures, open flames, sparks, welding, smoking and other ignition sources. Avoid static charge accumulation and discharge (see Section 7).
Hazardous decomposition products	Ignition and burning can release carbon monoxide, carbon dioxide, non-combusted hydrocarbons (smoke) and sulfur dioxide.

SECTION 11. TOXICOLOGICAL INFORMATION

Inhalation : May cause respiratory tract irritation. Central nervous system (brain) effects may include headache, dizziness, loss of balance and coordination, unconsciousness, coma, respiratory failure, and death. Irritating and toxic hydrogen sulfide gas may be present. Greater than 15 - 20 ppm continuous exposure can cause mucous membrane and respiratory tract irritation. 50 - 500 ppm can cause headache, nausea, and dizziness. Continued exposure at these levels can lead to loss of reasoning and balance, difficulty in breathing, fluid in the lungs, and possible loss of consciousness. Greater than 500 ppm can cause rapid unconsciousness due to respiratory paralysis and death by suffocation unless the victim is removed from exposure and successfully resuscitated. Greater than 1000 ppm can cause immediate unconsciousness and death if not promptly revived. After-effects from overexposure are not anticipated except what would be expected if the victim was without oxygen for more than 3 to 5 minutes (asphyxiation). The "rotten egg" odor of hydrogen sulfide is not a reliable indicator for warning of exposure, since olfactory fatigue (loss of smell) readily occurs, especially at concentrations above 50 ppm. At high concentrations, the victim may not even recognize the odor before becoming unconscious.

Ingestion Aspiration hazard if liquid is inhaled into lungs, particularly from vomiting after ingestion. Aspiration may result in chemical pneumonia, severe lung damage, respiratory failure and even death. Ingestion may cause gastrointestinal disturbances, including irritation, nausea, vomiting and diarrhea, and central nervous (brain) effects similar to alcohol intoxication. In severe cases, tremors, convulsions, loss of consciousness, coma, respiratory arrest and death may occur.

Skin irritation Practically non-toxic if absorbed following acute (single) exposure. May cause skin irritation with prolonged or repeated contact. Liquid may be absorbed through the skin in toxic amounts if large areas of skin are repeatedly exposed. Rare, precancerous warts on the forearms, backs of hands and scrotum have been reported from prolonged or repeated skin contact.

Eye irritation Irritating to eyes.

Chronic exposure This material contains polynuclear aromatic hydrocarbons (PNAs), some of which are animal carcinogens. Similar products produced skin cancer and systemic toxicity in laboratory animals following repeated applications. The significance of these results to human exposures has not been determined - see Section 11 Toxicological Information. Contains benzene, which can cause blood disease, including anemia and leukemia. Suspect reproductive hazard - contains material which may injure unborn child.

Target organs Skin, Eyes, Central nervous system, Respiratory system, Kidney, Liver

Component:

Petroleum; Crude oil	8002-05-9	Acute oral toxicity: LD50 rat Dose: 5,001 mg/kg

		Acute dermal toxicity: LD50 rabbit Dose: 2,001 mg/kg Skin irritation: Result: Mild skin irritation Eye irritation: Result: Mild eye irritation
Toluene	108-88-3	Acute oral toxicity: LD50 rat Dose: 636 mg/kg Acute dermal toxicity: LD50 rabbit Dose: 12,124 mg/kg Acute inhalation toxicity: LC50 rat Dose: 49 mg/l Exposure time: 4 h Skin irritation: Classification: Irritating to skin. Result: Mild skin irritation Prolonged skin contact may defat the skin and produce dermatitis. Eye irritation: Classification: Irritating to eyes. Result: Mild eye irritation
Xylene	1330-20-7	Acute oral toxicity: LD50 rat Dose: 2,840 mg/kg Acute dermal toxicity: LD50 rabbit Dose: ca. 4,500 mg/kg Acute inhalation toxicity: LC50 rat Dose: 6,350 mg/l Exposure time: 4 h Skin irritation: Classification: Irritating to skin. Result: Mild skin irritation Repeated or prolonged exposure may cause skin irritation and dermatitis, due to degreasing properties of the product. Eye irritation: Classification: Irritating to eyes. Result: Mild eye irritation
Naphthalene	91-20-3	Acute oral toxicity: LD50 rat Dose: 2,001 mg/kg Acute dermal toxicity: LD50 rat Dose: 2,501 mg/kg Acute inhalation toxicity: LC50 rat Dose: 101 mg/l Exposure time: 4 h Skin irritation: Classification: Irritating to skin. Result: Mild skin irritation Eye irritation: Classification: Irritating to eyes. Result: Mild eye irritation
Benzene	71-43-2	Acute oral toxicity: LD50 rat Dose: 930 mg/kg Acute inhalation toxicity: LC50 rat Dose: 44 mg/l Exposure time: 4 h Skin irritation: Classification: Irritating to skin. Result: Mild skin irritation Repeated or prolonged exposure may cause skin irritation and dermatitis, due to degreasing properties of the product.

		Eye irritation: Classification: Irritating to eyes. Result: Risk of serious damage to eyes.
Pentane	109-66-0	Acute oral toxicity: LD50 rat Dose: 2,001 mg/kg Acute inhalation toxicity: LC50 rat Dose: 364 mg/l Exposure time: 4 h Skin irritation: Repeated or prolonged exposure may cause skin irritation and dermatitis, due to degreasing properties of the product. Eye irritation: Classification: Irritating to eyes. Result: Mild eye irritation
Cyclohexane	110-82-7	Acute dermal toxicity: LD50 rabbit Dose: 2,001 mg/kg Acute inhalation toxicity: LC50 rat Dose: 14 mg/l Exposure time: 4 h Skin irritation: Classification: Irritating to skin. Result: Skin irritation Eye irritation: Classification: Irritating to eyes. Result: Mild eye irritation
Ethylbenzene	100-41-4	Acute oral toxicity: LD50 rat Dose: 3,500 mg/kg Acute dermal toxicity: LD50 rabbit Dose: 15,500 mg/kg Acute inhalation toxicity: LC50 rat Dose: 18 mg/l Exposure time: 4 h Skin irritation: Classification: Irritating to skin. Result: Mild skin irritation Eye irritation: Classification: Irritating to eyes. Result: Risk of serious damage to eyes
Heptane [and isomers]	142-82-5	Acute oral toxicity: LD50 rat Dose: 15,001 mg/kg Acute inhalation toxicity: LC50 rat Dose: 103 g/m3 Exposure time: 4 h Skin irritation: Classification: Irritating to skin. Result: Skin irritation Repeated or prolonged exposure may cause skin irritation and dermatitis, due to degreasing properties of the product. Eye irritation: Classification: Irritating to eyes. Result: Mild eye irritation
N-hexane	110-54-3	Acute oral toxicity: LD50 rat Dose: 25,000 mg/kg Acute dermal toxicity: LD50 rabbit Dose: 2,001 mg/kg Acute inhalation toxicity: LC50 rat Dose: 171.6 mg/l Exposure time: 4 h

Skin irritation: Classification: Irritating to skin.
Result: Skin irritation

Eye irritation: Classification: Irritating to eyes.
Result: Mild eye irritation

Teratogenicity: N11.00418960

Carcinogenicity

NTP	: Naphthalene (CAS-No.: 91-20-3) Benzene (CAS-No.: 71-43-2)
IARC	Gasoline, natural; Low boiling point naphtha (CAS-No.: 8006-61-9) Naphthalene (CAS-No.: 91-20-3) Benzene (CAS-No.: 71-43-2) Ethylbenzene (CAS-No.: 100-41-4)
OSHA	Benzene (CAS-No.: 71-43-2)
CA Prop 65	WARNING! This product contains a chemical known to the State of California to cause birth defects or other reproductive harm. Toluene (CAS-No.: 108-88-3) Benzene (CAS-No.: 71-43-2)

SECTION 12. ECOLOGICAL INFORMATION

Additional ecological information : Keep out of sewers, drainage areas, and waterways. Report spills and releases, as applicable, under Federal and State regulations.

Component:

N-hexane	110-54-3	Toxicity to fish: LC50 Species: Pimephales promelas (fathead minnow) Dose: 2.5 mg/l Exposure time: 96 h Acute and prolonged toxicity for aquatic invertebrates: EC50 Species: Daphnia magna (Water flea) Dose: 2.1 mg/l Exposure time: 48 h
Sulfur	7704-34-9	Acute and prolonged toxicity for aquatic invertebrates: EC0 Species: Daphnia magna (Water flea) Dose: > 10,000 mg/l Exposure time: 24 h

SECTION 13. DISPOSAL CONSIDERATIONS

Disposal : Consult federal, state and local waste regulations to determine appropriate waste characterization of material and allowable disposal methods.

SECTION 14. TRANSPORT INFORMATION

CFR

Proper shipping name	:	PETROLEUM CRUDE OIL
UN-No.	:	1267
Class	:	3
Packing group	:	II

TDG

Proper shipping name	:	PETROLEUM CRUDE OIL
UN-No.	:	UN1267
Class	:	3
Packing group	:	II

IATA Cargo Transport

UN UN-No.	:	UN1267
Description of the goods	:	PETROLEUM CRUDE OIL
Class	:	3
Packaging group	:	II
ICAO-Labels	:	3
Packing instruction (cargo aircraft)	:	364
Packing instruction (cargo aircraft)	:	Y341

IATA Passenger Transport

UN UN-No.	:	UN1267
Description of the goods	:	PETROLEUM CRUDE OIL
Class	:	3
Packaging group	:	II
ICAO-Labels	:	3
Packing instruction (passenger aircraft)	:	353
Packing instruction (passenger aircraft)	:	Y341

IMDG-Code

UN-No.	:	UN 1267
Description of the goods	:	PETROLEUM CRUDE OIL
Class	:	3
Packaging group	:	II
IMDG-Labels	:	3
EmS Number	:	F-E S-E
Marine pollutant	:	No

SECTION 15. REGULATORY INFORMATION

TSCA Status	:	On TSCA Inventory
DSL Status	:	All components of this product are on the Canadian DSL list.
SARA 311/312 Hazards	:	Fire Hazard Acute Health Hazard Chronic Health Hazard

CERCLA SECTION 103 and SARA SECTION 304 (RELEASE TO THE ENVIROMENT)

The CERCLA definition of hazardous substances contains a “petroleum exclusion” clause which exempts crude oil. Fractions of crude oil, and products (both finished and intermediate) from the crude oil refining process and any indigenous components of such from the CERCLA Section 103 reporting requirements. However, other federal reporting requirements, including SARA Section 304, as well as the Clean Water Act may still apply.

MASS RTK — US. Massachusetts Commonwealth's Right-to-Know Law (Appendix A to 105 Code of Massachusetts Regulations Section 670.000)

Components	CAS-No.
Benzene	71-43-2
Hydrogen Sulfide	7783-06-4
Sulfur	7704-34-9
N-hexane	110-54-3
Petroleum; Crude oil	8002-05-9
Toluene	108-88-3
Xylene	1330-20-7

Components	CAS-No.
hydrogen sulfide	7783-06-4

PENN RTK — US. Pennsylvania Worker and Community Right-to-Know Law (34 Pa. Code Chap. 301-323)

Components	CAS-No.
Benzene	71-43-2
Hydrogen Sulfide	7783-06-4
Sulfur	7704-34-9
N-hexane	110-54-3
Petroleum; Crude oil	8002-05-9
Toluene	108-88-3
Xylene	1330-20-7

NJ RTK — US. New Jersey Worker and Community Right-to-Know Act (New Jersey Statute Annotated Section 34:5A-5)

Components	CAS-No.
Benzene	71-43-2
Hydrogen Sulfide	7783-06-4
Sulfur	7704-34-9
N-hexane	110-54-3
Petroleum; Crude oil	8002-05-9
Toluene	
Xylene	

California Prop. 65 : WARNING! This product contains a chemical known to the State of California to cause cancer.

Benzene	71-43-2

WARNING! This product contains a chemical known to the State of California to cause birth defects or other reproductive harm.

Benzene	71-43-2
Toluene	108-88-3

SECTION 16. OTHER INFORMATION

Further information

The information provided in this Safety Data Sheet is correct to the best of our knowledge, information and belief at the date of its publication. The information given is designed only as guidance for safe handling, use, processing, storage, transportation, disposal and release and is not to be considered a warranty or quality specification. The information relates only to the specific material designated and may not be valid for such material used in combination with any other materials or in any process, unless specified in the text.

Revision Date : 12/07/2012

Safety Data Sheet
Crude oil, sour heavy

NFPA:

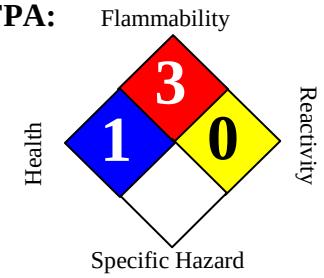

SECTION 1. PRODUCT AND COMPANY IDENTIFICATION

Product name	:	Crude oil, sour heavy			
Synonyms	:	Sour Crude, Crude Oil Sour, RS294, 0000002670, 888100005182			
SDS Number	:	888100005182	**Version**	:	1.8
Product Use Description	:	Industrial feedstock			
Company	:	For: Tesoro Refining & Marketing Co. 19100 Ridgewood Parkway, San Antonio, TX 78259			
Tesoro Call Center	:	(877) 783-7676	**Chemtrec (Emergency Contact)**	:	(800) 424-9300

SECTION 2. HAZARDS IDENTIFICATION

Classifications : Flammable Liquid – Category 2 or 3 depending on variable composition.
Aspiration Hazard – Category 1.
Carcinogenicity – Category 2
Specific Target Organ Toxicity (Repeated Exposure) – Category 2
Specific Target Organ Toxicity (Single Exposure) – Category 3
Eye Irritant – Category 2B
Chronic Aquatic Toxicity – Category 2

Pictograms

Signal Word : DANGER

Hazard Statements : Highly flammable liquid and vapor.
May be fatal if swallowed and enters airways – do not siphon gasoline by mouth.
Suspected of causing cancer if repeated over-exposure by inhalation and/or skin contact occurs.
May cause damage to liver, kidneys and nervous system by prolonged and repeated inhalation or skin contact.
Causes eye irritation. Can be absorbed through skin.
Repeated or prolonged skin contact can cause irritation and dermatitis.
May cause drowsiness or dizziness.
Harmful to aquatic life.

May release hydrogen sulfide (H2S) gas, a toxic-by-inhalation material. See Section 11.

Precautionary statements

Prevention

Obtain special instructions before use.
Do not handle until all safety precautions have been read and understood.
Keep away from heat, sparks, open flames, welding and hot surfaces.
No smoking.
Keep container tightly closed.
Ground and/or bond container and receiving equipment.
Use explosion-proof electrical equipment.
Use only non-sparking tools (if tools are used in flammable atmosphere).
Take precautionary measures against static discharge.
Wear gloves, eye protection and face protection (as needed to prevent skin and eye contact with liquid).
Wash hands or liquid-contacted skin thoroughly after handling.
Do not eat, drink or smoke when using this product.
Do not breathe vapors.
Use only outdoors or in a well-ventilated area.

Response

In case of fire: Use dry chemical, CO2, water spray or fire-fighting foam to extinguish.
If swallowed: Immediately call a poison center, doctor, hospital emergency room, medical clinic or 911. Do NOT induce vomiting. Rinse mouth.
If on skin (or hair): Take off immediately all contaminated clothing. Rinse skin with water/shower.
If in eye: Rinse cautiously with water for several minutes. Remove contact lenses, if present and easy to do. Continue rinsing.
If skin or eye irritation persists, get medical attention.
If inhaled: Remove person to fresh air and keep comfortable for breathing.
Get medical attention if you feel unwell.

Storage

Store in a well-ventilated place. Keep cool. Store locked up. Keep container tightly closed . Use only approved containers.

Disposal

Dispose of contents/containers to approved disposal site in accordance with local, regional, national, and/or international regulations.

SECTION 3. COMPOSITION/INFORMATION ON INGREDIENTS

Component	CAS-No.	Weight %
Petroleum; Crude oil	8002-05-9	80 - 85%
Benzene	71-43-2	5 - 7%
Toluene	108-88-3	5 - 7%
Ethylbenzene	100-41-4	5 - 7%
Xylene	1330-20-7	5 - 7%

Hydrogen Sulfide	7783-06-4	< 0.5%

SECTION 4. FIRST AID MEASURES

Inhalation : Move to fresh air. If not breathing, give artificial respiration. Administer oxygen or artificial respiration if needed. Seek medical attention immediately.

Skin contact : Take off contaminated clothing and shoes immediately. Wash off with soap and plenty of water. Seek medical advice if symptoms persist or develop. Seek medical attention if irritation or skin thermal burns occur.

Eye contact : In case of eye contact, immediately flush with low pressure, cool water for at least 15 minutes, opening eyelids to ensure flushing. Hold the eyelids open and away from the eyeballs to ensure that all surfaces are flushed thoroughly. Seek medical advice if symptoms persist or develop.

Ingestion : Do NOT induce vomiting. Do not give liquids. Seek medical attention immediately. If vomiting does occur naturally, keep head below the hips to reduce the risks of aspiration. Monitor for breathing difficulties. Small amounts of material which enter the mouth should be rinsed out until the taste is dissipated.

SECTION 5. FIRE-FIGHTING MEASURES

Suitable extinguishing media : SMALL FIRES: Any extinguisher suitable for Class B fires, dry chemical, CO2, water spray, or fire-fighting foam. LARGE FIRES: Water spray, fog or fire-fighting foam. Water may be ineffective for fighting the fire, but may be used to cool fire-exposed containers.

Specific hazards during fire fighting : Above the flash point, explosive vapor-air mixtures may be formed. Vapors can flow along surfaces to distant ignition source and flash back. Dangerous fire and explosion hazard when exposed to heat, sparks or flame. Do not allow liquid runoff to enter sewers or public waters.

Special protective equipment for fire-fighters : Firefighters should wear self-contained breathing apparatus and full protective clothing as need for protection from heat and airborne combustion products. Withdraw immediately from the area if there is a rising sound from a venting safety device or discoloration of vessels, tanks, or pipelines.

Further information : Isolate area around container involved in fire. Cool tanks, shells, and containers exposed to fire and excessive heat with water. For massive fires the use of unmanned hose holders or monitor nozzles may be advantageous to further minimize personnel exposure. Major fires may require withdrawal, allowing the tank to burn. Large storage tank fires typically require specially trained personnel and equipment to extinguish the fire, often including the need for properly applied fire fighting foam.

SECTION 6. ACCIDENTAL RELEASE MEASURES

Personal precautions : Evacuate nonessential personnel and remove or secure all ignition sources. Consider wind direction; stay upwind and uphill, if possible. Evaluate the direction of product travel, diking, sewers, etc. to contain spill areas.

Environmental precautions : Carefully contain and stop the source of the spill, if safe to do so. Do not flush down sewer or drainage systems, unless system is designed and permitted to handle such material. The use of fire fighting foam may be useful in certain situations to reduce vapors. WASTE DISPOSAL METHOD: Dispose of in accordance with Local, State, and Federal Regulations.

Methods for cleaning up : Take up with sand or oil absorbing materials. Carefully shovel, scoop or sweep up into a waste container for reclamation or disposal - caution, flammable vapors may accumulate in closed containers. Response and clean-up crews must be properly trained and must utilize proper protective equipment (see Section 8).

Additional advice : Inform the responsible authorities in case of leakage, or of entry into waterways, soil or drains.

SECTION 7. HANDLING AND STORAGE

Precautions for safe handling : Handle as a combustible liquid. Keep product and empty containers away from fire, sparks and heated surfaces. Electrical equipment should be approved for classified area. Bond and ground containers during product transfer to reduce the possibility of static-initiated fire or explosion.

Conditions for safe storage, including incompatibilities : Keep away from flame, sparks, excessive temperatures and open flame. Use approved vented containers. Keep containers closed and clearly labeled. Empty product containers or vessels may contain explosive vapors. Do not pressurize, cut, heat, weld or expose containers to sources of ignition. Store in a well-ventilated area. This storage area should comply with NFPA 30 "Flammable and Combustible Liquid Code". Avoid storage near incompatible materials. The cleaning of tanks previously containing this product should follow API Recommended Practice (RP) 2013 "Cleaning Mobile Tanks In Flammable and Combustible Liquid Service" and API RP 2015 "Cleaning Petroleum Storage Tanks". The cleaning of tanks previously containing this product should follow API Recommended Practice (RP) 2013 "Cleaning Mobile Tanks In Flammable and Combustible Liquid Service" and API RP 2015 "Cleaning Petroleum Storage Tanks". Hydrogen sulfide may accumulate in tanks and bulk transport compartments. Consider appropriate respiratory protection (see Section 8). Stand upwind. Avoid vapors when opening hatches and dome covers. Confined spaces should be ventilated and gas tested prior to entry.

SECTION 8. EXPOSURE CONTROLS / PERSONAL PROTECTION

Exposure Guidelines

List	Components	CAS-No.	Type:	Value
OSHA	Benzene	71-43-2	TWA	1 ppm
		71-43-2	STEL	5 ppm
		71-43-2	OSHA_ACT	0.5 ppm
OSHA Z1	Ethylbenzene	100-41-4	PEL	100 ppm 435 mg/m3
	Xylene	1330-20-7	PEL	100 ppm 435 mg/m3
	Hydrogen sulfide	7783-06-4	STEL	20 ppm
ACGIH	Benzene	71-43-2	TWA	0.5 ppm
		71-43-2	STEL	2.5 ppm
	Toluene	108-88-3	TWA	50 ppm
	Ethylbenzene	100-41-4	TWA	100 ppm
		100-41-4	STEL	125 ppm
	Xylene	1330-20-7	TWA	100 ppm

		1330-20-7	STEL	150 ppm
	Hydrogen Sulfide	7783-06-4	TWA	1 ppm
		7783-06-4	STEL	5 ppm

Engineering measures : Use adequate ventilation to keep gas and vapor concentrations of this product below occupational exposure and flammability limits, particularly in confined spaces.

Eye protection : Safety glasses or goggles are recommended where there is a possibility of splashing or spraying.

Hand protection : Gloves constructed of nitrile, neoprene, or PVC are recommended.

Skin and body protection : Chemical protective clothing such as DuPont Tyvek QC, TyChem® or equivalent, recommended based on degree of exposure. The resistance of specific material may vary from product to product as well as with degree of exposure.

Respiratory protection : If hydrogen sulfide concentration may exceed permissible exposure limit, a positive-pressure SCBA or Type C supplied air respirator with escape bottle is required as respiratory protection. If hydrogen sulfide concentration is below H2S permissible exposure limit a NIOSH/ MSHA-approved air-purifying respirator with acid gas cartridges may be acceptable for odor control, but continuous air monitoring for H2S is recommended. Protection provided by air-purifying respirators is limited. Refer to OSHA 29 CFR 1910.134, ANSI Z88.2-1992, NIOSH Respirator Decision Logic, and the manufacturer for additional guidance on respiratory protection selection. Use a NIOSH/ MSHA-approved positive-pressure supplied-air respirator if there is a potential for uncontrolled release, exposure levels are not known, in oxygen-deficient atmospheres, or any other circumstance where an air-purifying respirator may not provide adequate protection.

Hygiene measures : Emergency eye wash capability should be available in the vicinity of any potential splash exposure. Use good personal hygiene practices. Avoid repeated and/or prolonged skin exposure. Wash hands before eating, drinking, smoking, or using toilet facilities. DO NOT use gasoline, kerosene, solvents, or harsh abrasive skin cleaners to clean skin. Waterless hand cleaners are effective. Promptly remove contaminated clothing and launder before reuse. Consider the need to discard contaminated leather shoes and gloves. Consider disposal of contaminated clothing rather than laundering to prevent the formation of flammable vapors which could ignite via washer or dryer.

SECTION 9. PHYSICAL AND CHEMICAL PROPERTIES

Appearance Typical is a thick, dark yellow to brown or greenish black liquid

Odor Petroleum asphalt odor. Hydrogen sulfide (H2S) has a characteristic rotten egg odor with an odor threshold as low as 10 parts per billion or even less. However, this odor should not be used as a warning property because H2S can deaden the sense of smell. H2S concentrations can be measured with an H2S meter or colorimetric indicating tubes.

Odor threshold Odor threshold varies with the composition of the crude oil

pH Not applicable

Melting point/freezing point -30° to 30°C has been reported as a pour point

Initial boiling point & range Distillation is typically not performed above 300°C at atmospheric pressure

Flash point	-7 to 75°C
Evaporation rate:	Higher initially and declines if lighter components evaporate
Flammability (solid, gas)	Flammable gas or vapors released by liquid
Upper explosive limit	Varies with composition but typical is approximately 7%
Lower explosive limit	Varies with composition but typical is approximately 0.7%
Vapor pressure	6 to 45 kPa
Vapor density (air = 1)	No data available
Relative density (water = 1)	0.8 to 1.0 g/mL is typical at 15°C
Solubility (in water)	1 to 2% by weight is maximum reported for soluble components of crude oil
Partition coefficient (n-octanol/water)	2 to > 6 as log Pow
Auto-ignition temperature	Varies with composition
Decomposition temperature	Will evaporate or boil and possibly ignite before decomposition occurs.
Kinematic viscosity	5 to > 1300 mm^2/s at 38°C

SECTION 10. STABILITY AND REACTIVITY

Reactivity	Vapors may form explosive mixture with air. Hazardous polymerization does not occur.
Chemical stability	Stable under normal conditions.
Possibility of hazardous reactions	Can react with strong oxidizing agents, peroxides, acids and alkalies.
Conditions to avoid	Avoid high temperatures, open flames, sparks, welding, smoking and other ignition sources. Avoid static charge accumulation and discharge (see Section 7).
Hazardous decomposition products	Ignition and burning can release carbon monoxide, carbon dioxide, non-combusted hydrocarbons (smoke) and sulfur dioxide.

SECTION 11. TOXICOLOGICAL INFORMATION

Inhalation	May cause respiratory tract irritation. Central nervous system (brain) effects may include headache, dizziness, loss of balance and coordination, unconsciousness, coma, respiratory failure, and death. Irritating and toxic hydrogen sulfide gas may be present. Greater than 15 - 20 ppm continuous exposure can cause mucous membrane and respiratory tract irritation. 50 - 500 ppm can cause headache, nausea, and dizziness. Continued exposure at these levels can lead to loss of reasoning and balance, difficulty in breathing, fluid in the lungs, and possible loss of consciousness. Greater than 500 ppm can cause rapid unconsciousness due to respiratory paralysis and death by suffocation unless the victim is removed from exposure and successfully resuscitated. Greater than 1000 ppm can cause immediate unconsciousness and death if not promptly revived. After-effects from overexposure are not anticipated except what would be expected if the victim was without oxygen for more than 3 to 5

minutes (asphyxiation). The "rotten egg" odor of hydrogen sulfide is not a reliable indicator for warning of exposure, since olfactory fatigue (loss of smell) readily occurs, especially at concentrations above 50 ppm. At high concentrations, the victim may not even recognize the odor before becoming unconscious.

Ingestion

Aspiration hazard if liquid is inhaled into lungs, particularly from vomiting after ingestion. Aspiration may result in chemical pneumonia, severe lung damage, respiratory failure and even death. Ingestion may cause gastrointestinal disturbances, including irritation, nausea, vomiting and diarrhea, and central nervous (brain) effects similar to alcohol intoxication. In severe cases, tremors, convulsions, loss of consciousness, coma, respiratory arrest and death may occur.

Skin irritation

Practically non-toxic if absorbed following acute (single) exposure. May cause skin irritation with prolonged or repeated contact. Liquid may be absorbed through the skin in toxic amounts if large areas of skin are repeatedly exposed. Rare, precancerous warts on the forearms, backs of hands and scrotum have been reported from prolonged or repeated skin contact

Eye irritation

Irritating to eyes.

Chronic exposure

This material contains polynuclear aromatic hydrocarbons (PNAs), some of which are animal carcinogens. Similar products produced skin cancer and systemic toxicity in laboratory animals following repeated applications. The significance of these results to human exposures has not been determined - see Section 11 Toxicological Information. Contains benzene, which can cause blood disease, including anemia and leukemia. Suspect reproductive hazard - contains material which may injure unborn child.

Target organs

Skin, Eyes, Central nervous system, Respiratory system, Kidney, Liver

Component

Petroleum; Crude oil	8002-05-9	Acute oral toxicity: LD50 rat Dose: 5,001 mg/kg Acute dermal toxicity: LD50 rabbit Dose: 2,001 mg/kg Skin irritation: Result: Mild skin irritation Eye irritation: Result: Mild eye irritation Carcinogenicity: N11.00418605
Toluene	108-88-3	Acute oral toxicity: LD50 rat Dose: 636 mg/kg Acute dermal toxicity: LD50 rabbit Dose: 12,124 mg/kg Acute inhalation toxicity: LC50 rat Dose: 49 mg/l Exposure time: 4 h Skin irritation: Classification: Irritating to skin. Result: Mild skin irritation Prolonged skin contact may defat the skin and produce dermatitis. Eye irritation: Classification: Irritating to eyes. Result: Mild eye irritation
Xylene	1330-20-7	Acute oral toxicity: LD50 rat Dose: 2,840 mg/kg Acute dermal toxicity: LD50 rabbit Dose: ca. 4,500 mg/kg Acute inhalation toxicity: LC50 rat Dose: 6,350 mg/l Exposure time: 4 h Skin irritation: Classification: Irritating to skin. Result: Mild skin irritation Repeated or prolonged exposure may cause skin irritation and dermatitis, due to degreasing properties of the product. Eye irritation: Classification: Irritating to eyes. Result: Mild eye irritation

Naphthalene	91-20-3	Acute oral toxicity: LD50 rat Dose: 2,001 mg/kg Acute dermal toxicity: LD50 rat Dose: 2,501 mg/kg Acute inhalation toxicity: LC50 rat Dose: 101 mg/l Exposure time: 4 h Skin irritation: Classification: Irritating to skin. Result: Mild skin irritation Eye irritation: Classification: Irritating to eyes. Result: Mild eye irritation Carcinogenicity: N11.00422130
Benzene	71-43-2	Acute oral toxicity: LD50 rat Dose: 930 mg/kg Acute inhalation toxicity: LC50 rat Dose: 44 mg/l Exposure time: 4 h Skin irritation: Classification: Irritating to skin. Result: Mild skin irritation Repeated or prolonged exposure may cause skin irritation and dermatitis, due to degreasing properties of the product. Eye irritation: Classification: Irritating to eyes. Result: Risk of serious damage to eyes
Pentane	109-66-0	Acute oral toxicity: LD50 rat Dose: 2,001 mg/kg Acute inhalation toxicity: LC50 rat Dose: 364 mg/l Exposure time: 4 h Skin irritation: Repeated or prolonged exposure may cause skin irritation and dermatitis, due to degreasing properties of the product. Eye irritation: Classification: Irritating to eyes. Result: Mild eye irritation
Cyclohexane	110-82-7	Acute dermal toxicity: LD50 rabbit Dose: 2,001 mg/kg Acute inhalation toxicity: LC50 rat Dose: 14 mg/l Exposure time: 4 h Skin irritation: Classification: Irritating to skin. Result: Skin irritation Eye irritation: Classification: Irritating to eyes. Result: Mild eye irritation
Ethylbenzene	100-41-4	Acute oral toxicity: LD50 rat Dose: 3,500 mg/kg Acute dermal toxicity: LD50 rabbit Dose: 15,500 mg/kg Acute inhalation toxicity: LC50 rat Dose: 18 mg/l Exposure time: 4 h Skin irritation: Classification: Irritating to skin. Result: Mild skin irritation Eye irritation: Classification: Irritating to eyes. Result: Risk of serious damage to eyes.
Heptane [and isomers]	142-82-5	Acute oral toxicity: LD50 rat Dose: 15,001 mg/kg Acute inhalation toxicity: LC50 rat Dose: 103 g/m3 Exposure time: 4 h Skin irritation: Classification: Irritating to skin. Result: Skin irritation Repeated or prolonged exposure may cause skin irritation and dermatitis, due to degreasing properties of the product. Eye irritation: Classification: Irritating to eyes. Result: Mild eye irritation
N-hexane	110-54-3	Acute oral toxicity: LD50 rat Dose: 25,000 mg/kg Acute dermal toxicity: LD50 rabbit

Dose: 2,001 mg/kg
Acute inhalation toxicity: LC50 rat
Dose: 171.6 mg/l
Exposure time: 4 h
Skin irritation: Classification: Irritating to skin.
Result: Skin irritation
Eye irritation: Classification: Irritating to eyes.
Result: Mild eye irritation
Teratogenicity: N11.00418960

Carcinogenicity :

NTP Naphthalene (CAS-No.: 91-20-3)
Benzene (CAS-No.: 71-43-2)

IARC Gasoline, natural; Low boiling point naphtha (CAS-No.: 8006-61-9)
Naphthalene (CAS-No.: 91-20-3)
Benzene (CAS-No.: 71-43-2)
Ethylbenzene (CAS-No.: 100-41-4)

OSHA Benzene (CAS-No.: 71-43-2)

CA Prop 65 WARNING! This product contains a chemical known to the State of California to cause birth defects or other reproductive harm.
Toluene (CAS-No.: 108-88-3)
Benzene (CAS-No.: 71-43-2)

SECTION 12. ECOLOGICAL INFORMATION

Additional ecological information : Keep out of sewers, drainage areas, and waterways. Report spills and releases, as applicable, under Federal and State regulations.

Component:

Toluene 108-88-3

Toxicity to fish:
LC50
Species: Carassius auratus (goldfish)
Dose: 13 mg/l
Exposure time: 96 h

Acute and prolonged toxicity for aquatic invertebrates:
EC50
Species: Daphnia magna (Water flea)
Dose: 11.5 mg/l
Exposure time: 48 h

Toxicity to algae:
IC50
Species: Selenastrum capricornutum (green algae)
Dose: 12 mg/l
Exposure time: 72 h

SECTION 13. DISPOSAL CONSIDERATIONS

Disposal : Consult federal, state and local waste regulations to determine appropriate waste characterization of material and allowable disposal methods.

SECTION 14. TRANSPORT INFORMATION

CFR

Proper shipping name	:	PETROLEUM CRUDE OIL
UN-No.	:	1267
Class	:	3
Packing group	:	II

TDG

Proper shipping name	:	PETROLEUM CRUDE OIL
UN-No.	:	UN1267
Class	:	3
Packing group	:	II

IATA Cargo Transport

UN UN-No.	:	UN1267
Description of the goods	:	PETROLEUM CRUDE OIL
Class	:	3
Packaging group	:	II
ICAO-Labels	:	3
Packing instruction (cargo aircraft)	:	366
Packing instruction (cargo aircraft)	:	Y344

IATA Passenger Transport

UN UN-No.	:	UN1267
Description of the goods	:	PETROLEUM CRUDE OIL
Class	:	3
Packaging group	:	II
ICAO-Labels	:	3
Packing instruction (passenger aircraft)	:	355
Packing instruction (passenger aircraft)	:	Y344

IMDG-Code

UN-No.	:	UN 1267
Description of the goods	:	PETROLEUM CRUDE OIL
Class	:	3
Packaging group	:	II
IMDG-Labels	:	3
EmS Number	:	F-E S-E
Marine pollutant	:	No

SECTION 15. REGULATORY INFORMATION

TSCA Status	:	On TSCA Inventory
DSL Status	:	All components of this product are on the Canadian DSL list.
SARA 311/312 Hazards	:	Acute Health Hazard Chronic Health Hazard

CERCLA SECTION 103 and SARA SECTION 304 (RELEASE TO THE ENVIROMENT)
The CERCLA definition of hazardous substances contains a "petroleum exclusion" clause which exempts crude oil. Fractions of crude oil, and products (both finished and intermediate) from the crude oil refining process and any indigenous components of such from the CERCLA Section 103 reporting requirements. However, other federal reporting requirements, including SARA Section 304, as well as the Clean Water Act may still apply.

CERCLA Reportable Quantity : 118 lbs

SARA III — US. EPA Emergency Planning and Community Right-To-Know Act (EPCRA) SARA Title III Section 313 Toxic Chemicals (40 CFR 372.65) - Supplier Notification Required

Components	CAS-No.
Xylene	1330-20-7
Ethylbenzene	100-41-4
Toluene	108-88-3
Benzene	71-43-2

SARA III — US. EPA Emergency Planning and Community Right-To-Know Act (EPCRA) SARA Title III Section 302 Extremely Hazardous Substance (40 CFR355, Appendix A)

Components	CAS-No.

PENN RTK — US. Pennsylvania Worker and Community Right-to-Know Law (34 Pa. Code Chap. 301-323)

Components	CAS-No.
Benzene	71-43-2
Toluene	108-88-3
Ethylbenzene	100-41-4
Xylene	1330-20-7
Petroleum; Crude oil	8002-05-9

MASS RTK — US. Massachusetts Commonwealth's Right-to-Know Law (Appendix A to 105 Code of Massachusetts Regulations Section 670.000)

Components	CAS-No.
Benzene	71-43-2
Toluene	108-88-3
Ethylbenzene	100-41-4
Xylene	1330-20-7
Petroleum; Crude oil	8002-05-9

NJ RTK — US. New Jersey Worker and Community Right-to-Know Act (New Jersey Statute Annotated Section 34:5A-5)

Components	CAS-No.
Benzene	71-43-2
Toluene	108-88-3
Ethylbenzene	100-41-4
Xylene	1330-20-7
Petroleum; Crude oil	8002-05-9

California Prop. 65 : WARNING! This product contains a chemical known in the State of California to cause cancer.

Ethylbenzene	100-41-4
Benzene	71-43-2

WARNING! This product contains a chemical known to the State of California to cause birth defects or other reproductive harm.

Toluene	108-88-3
Benzene	71-43-2

SECTION 16. OTHER INFORMATION

Further information

The information provided in this Safety Data Sheet is correct to the best of our knowledge, information and belief at the date of its publication. The information given is designed only as guidance for safe handling, use, processing, storage, transportation, disposal and release and is not to be considered a warranty or quality specification. The information relates only to the specific material designated and may not be valid for such material used in combination with any other materials or in any process, unless specified in the text.

Revision Date : 02/02/2013

Safety Data Sheet
Crude oil, sour light

NFPA:

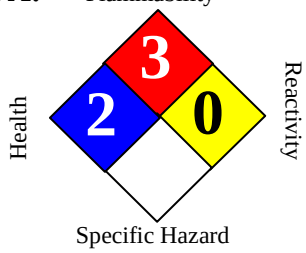

SECTION 1. PRODUCT AND COMPANY IDENTIFICATION

Product name	:	Crude oil, sour light			
Synonyms	:	Hydrogen sulfide crude; hydrogen sulfide oil; crude oil; sealed oil; separator crude; sour crude; sour oil, petroleum, RS294, 0000002670, 888100005161			
SDS Number	:	888100005161	**Version**	:	1.3
Product Use Description	:	Refining feedstock			
Company	:	For: Tesoro Refining & Marketing Co. 19100 Ridgewood Parkway, San Antonio, TX 78259			
Tesoro Call Center	:	(877) 783-7676	**Chemtrec (Emergency Contact)**	:	(800) 424-9300

SECTION 2. HAZARDS IDENTIFICATION

Classifications : Flammable Liquid – Category 2 or 3 depending on variable composition.
Aspiration Hazard – Category 1.
Carcinogenicity – Category 2
Specific Target Organ Toxicity (Repeated Exposure) – Category 2
Specific Target Organ Toxicity (Single Exposure) – Category 3
Eye Irritant – Category 2B
Chronic Aquatic Toxicity – Category 2

Pictograms

Signal Word : DANGER

Hazard Statements : Highly flammable liquid and vapor.
May be fatal if swallowed and enters airways – do not siphon gasoline by mouth.
Suspected of causing cancer if repeated over-exposure by inhalation and/or skin contact occurs.
May cause damage to liver, kidneys and nervous system by prolonged and repeated inhalation or skin contact.
Causes eye irritation. Can be absorbed through skin.

Repeated or prolonged skin contact can cause irritation and dermatitis.
May cause drowsiness or dizziness.
Harmful to aquatic life.
May release hydrogen sulfide (H2S) gas, a toxic-by-inhalation material. See Section 11.

Precautionary statements

Prevention

Obtain special instructions before use.
Do not handle until all safety precautions have been read and understood.
Keep away from heat, sparks, open flames, welding and hot surfaces.
No smoking.
Keep container tightly closed.
Ground and/or bond container and receiving equipment.
Use explosion-proof electrical equipment.
Use only non-sparking tools (if tools are used in flammable atmosphere).
Take precautionary measures against static discharge.
Wear gloves, eye protection and face protection (as needed to prevent skin and eye contact with liquid).
Wash hands or liquid-contacted skin thoroughly after handling.
Do not eat, drink or smoke when using this product.
Do not breathe vapors.
Use only outdoors or in a well-ventilated area.

Response

In case of fire: Use dry chemical, CO2, water spray or fire-fighting foam to extinguish.
If swallowed: Immediately call a poison center, doctor, hospital emergency room, medical clinic or 911. Do NOT induce vomiting. Rinse mouth.
If on skin (or hair): Take off immediately all contaminated clothing. Rinse skin with water/shower.
If in eye: Rinse cautiously with water for several minutes. Remove contact lenses, if present and easy to do. Continue rinsing.
If skin or eye irritation persists, get medical attention.
If inhaled: Remove person to fresh air and keep comfortable for breathing.
Get medical attention if you feel unwell.

Storage

Store in a well-ventilated place. Keep cool. Store locked up. Keep container tightly closed . Use only approved containers.

Disposal

Dispose of contents/containers to approved disposal site in accordance with local, regional, national, and/or international regulations.

SECTION 3. COMPOSITION/INFORMATION ON INGREDIENTS

Component	CAS-No.	Weight %
Petroleum; Crude oil	8002-05-9	100%
N-hexane	110-54-3	0 - 1.5%
Hydrogen Sulfide	7783-06-4	Highly Variable

Sulfur	7704-34-9	1 - 1.5%
Benzene	71-43-2	0.1 - 3%

SECTION 4. FIRST AID MEASURES

Inhalation : Move to fresh air. Administer oxygen or artificial respiration if needed. Seek medical attention immediately.

Skin contact : Take off all contaminated clothing immediately. Wash off immediately with soap and plenty of water. Seek medical attention if irritation or skin thermal burns occur.

Eye contact : In case of eye contact, immediately flush with low pressure, cool water for at least 15 minutes, opening eyelids to ensure flushing. Hold the eyelids open and away from the eyeballs to ensure that all surfaces are flushed thoroughly. Seek medical attention immediately.

Ingestion : Do NOT induce vomiting. Never give anything by mouth to an unconscious person. Seek medical attention immediately. If vomiting does occur naturally, keep head below the hips to reduce the risks of aspiration. Small amounts of material which enter the mouth should be rinsed out until the taste is dissipated.

SECTION 5. FIRE-FIGHTING MEASURES

Suitable extinguishing media : SMALL FIRES: Any extinguisher suitable for Class B fires, dry chemical, CO2, water spray, or fire-fighting foam. LARGE FIRES: Water spray, fog or fire-fighting foam. Water may be ineffective for fighting the fire, but may be used to cool fire-exposed containers.

Specific hazards during fire fighting : Vapors are heavier than air and may travel long distances to a point of ignition and flash back. Do not allow liquid runoff to enter sewers or public waters. Gas may form explosive mixture with air.

Special protective equipment for fire-fighters : Use NIOSH/MSHA approved positive pressure self-contained breathing apparatus and fully protective clothing such as bunker gear if needed to prevent exposure.

Further information : Isolate area, particularly around ends of storage vessels. Cool tanks, shells, and containers exposed to fire and excessive heat with water. For massive fires the use of unmanned hose holders or monitor nozzles may be advantageous to further minimize personnel exposure. Major fires may require withdrawal, allowing the tank to burn. Large storage tank fires typically require specially trained personnel and equipment to extinguish the fire, often including the need for properly applied fire fighting foam.

SECTION 6. ACCIDENTAL RELEASE MEASURES

Personal precautions : Evacuate nonessential personnel and remove or secure all ignition sources. Consider wind direction; stay upwind and uphill, if possible. Evaluate the direction of product travel, diking, sewers, etc. to contain spill areas.

Environmental precautions : Carefully contain and stop the source of the spill, if safe to do so. Protect bodies of water by diking, absorbents, or absorbent boom, if possible. Do not flush down sewer or drainage systems, unless system is designed and permitted to handle such material. The use of fire fighting foam may be useful in certain situations to reduce vapors.

Methods for cleaning up : Take up with sand or oil absorbing materials. Carefully shovel, scoop or sweep up into a waste container for reclamation or disposal - caution, flammable vapors may accumulate in closed containers. Response and clean-up crews must be properly trained and must utilize proper protective equipment (see Section 8).

SECTION 7. HANDLING AND STORAGE

Precautions for safe handling : Handle as a combustible liquid. Keep product and empty containers away from fire, sparks and heated surfaces. Electrical equipment should be approved for classified area. Bond and ground containers during product transfer to reduce the possibility of static-initiated fire or explosion.

Conditions for safe storage, including incompatibilities : Keep away from flame, sparks, excessive temperatures and open flame. Use approved vented containers. Keep containers closed and clearly labeled. Empty product containers or vessels may contain explosive vapors. Do not pressurize, cut, heat, weld or expose containers to sources of ignition. Store in a well-ventilated area. This storage area should comply with NFPA 30 "Flammable and Combustible Liquid Code". Avoid storage near incompatible materials. The cleaning of tanks previously containing this product should follow API Recommended Practice (RP) 2013 "Cleaning Mobile Tanks In Flammable and Combustible Liquid Service" and API RP 2015 "Cleaning Petroleum Storage Tanks".

SECTION 8. EXPOSURE CONTROLS / PERSONAL PROTECTION

Exposure Guidelines

List	Components	CAS-No.	Type:	Value
OSHA	Benzene	71-43-2	TWA	1 ppm
		71-43-2	STEL	5 ppm
		71-43-2	OSHA_AL	0.5 ppm
OSHA Z1	N-hexane	110-54-3	PEL	500 ppm 1,800 mg/m3
OSHA Z1	Hydrogen sulfide	7783-06-4	STEL	20 ppm
ACGIH	N-hexane	110-54-3	TWA	50 ppm
	Hydrogen Sulfide	7783-06-4	TWA	1ppm
		7783-06-4	STEL	5 ppm
	Benzene	71-43-2	TWA	0.5 ppm
		71-43-2	STEL	2.5 ppm

Engineering measures : Use adequate ventilation to keep gas and vapor concentrations of this product below occupational exposure and flammability limits, particularly in confined spaces.

Eye protection : Ensure that eyewash stations and safety showers are close to the workstation location. Goggles, and face shield or full facepiece pressure-demand supplied air respirator as needed to prevent eye and face contact.

Hand protection : Gloves constructed of nitrile, neoprene, or PVC are recommended. The resistance of specific material may vary from product to product as well as with degree of exposure.

Skin and body protection	:	Chemical protective clothing such as DuPont TyChem ®, Barricade or equivalent, recommended based on degree of exposure.
Respiratory protection	:	A NIOSH/ MSHA-approved air-purifying respirator with organic vapor cartridges or canister may be permissible under certain circumstances where airborne concentrations are or may be expected to exceed exposure limits or for odor or irritation. Protection provided by air-purifying respirators is limited. Refer to OSHA 29 CFR 1910.134, ANSI Z88.2-1992, NIOSH Respirator Decision Logic, and the manufacturer for additional guidance on respiratory protection selection. Use a NIOSH/ MSHA-approved positive-pressure supplied-air respirator if there is a potential for uncontrolled release, exposure levels are not known, in oxygen-deficient atmospheres, or any other circumstance where an air-purifying respirator may not provide adequate protection.
Hygiene measures	:	Avoid repeated and/or prolonged skin exposure. Wash hands before eating, drinking, smoking, or using toilet facilities. DO NOT use gasoline, kerosene, solvents, or harsh abrasive skin cleaners to clean skin. Waterless hand cleaners are effective. Promptly remove contaminated clothing and launder before reuse. Consider the need to discard contaminated leather shoes and gloves. Use good personal hygiene practices.

SECTION 9. PHYSICAL AND CHEMICAL PROPERTIES

Appearance	Typical is a thick, dark yellow to brown or greenish black liquid
Odor	Petroleum asphalt odor. Hydrogen sulfide (H2S) has a characteristic rotten egg odor with an odor threshold as low as 10 parts per billion or even less. However, this odor should not be used as a warning property because H2S can deaden the sense of smell. H2S concentrations can be measured with an H2S meter or colorimetric indicating tubes.
Odor threshold	Odor threshold varies with the composition of the crude oil
pH	Not applicable
Melting point/freezing point	-30° to 30°C has been reported as a pour point
Initial boiling point & range	Distillation is typically not performed above 300°C at atmospheric pressure
Flash point	-7 to 75°C
Evaporation rate:	Higher initially and declines if lighter components evaporate
Flammability (solid, gas)	Flammable gas or vapors released by liquid
Upper explosive limit	Varies with composition but typical is approximately 7%
Lower explosive limit	Varies with composition but typical is approximately 0.7%
Vapor pressure	6 to 45 kPa
Vapor density (air = 1)	No data available
Relative density (water = 1)	0.8 to 1.0 g/mL is typical at 15°C
Solubility (in water)	1 to 2% by weight is maximum reported for soluble components of crude oil
	2 to > 6 as log Pow

Partition coefficient (n-octanol/water)	Varies with composition
Auto-ignition temperature	Will evaporate or boil and possibly ignite before decomposition occurs.
Decomposition temperature	5 to > 1300 mm^2/s at 38°C
Kinematic viscosity	

SECTION 10. STABILITY AND REACTIVITY

Reactivity	Vapors may form explosive mixture with air. Hazardous polymerization does not occur.
Chemical stability	Stable under normal conditions.
Possibility of hazardous reactions	Can react with strong oxidizing agents, peroxides, acids and alkalies.
Conditions to avoid	Avoid high temperatures, open flames, sparks, welding, smoking and other ignition sources. Avoid static charge accumulation and discharge (see Section 7).
Hazardous decomposition products	Ignition and burning can release carbon monoxide, carbon dioxide, non-combusted hydrocarbons (smoke) and sulfur dioxide.

SECTION 11. TOXICOLOGICAL INFORMATION

Inhalation	May cause respiratory tract irritation. Central nervous system (brain) effects may include headache, dizziness, loss of balance and coordination, unconsciousness, coma, respiratory failure, and death. Irritating and toxic hydrogen sulfide gas may be present. Greater than 15 - 20 ppm continuous exposure can cause mucous membrane and respiratory tract irritation. 50 - 500 ppm can cause headache, nausea, and dizziness. Continued exposure at these levels can lead to loss of reasoning and balance, difficulty in breathing, fluid in the lungs, and possible loss of consciousness. Greater than 500 ppm can cause rapid unconsciousness due to respiratory paralysis and death by suffocation unless the victim is removed from exposure and successfully resuscitated. Greater than 1000 ppm can cause immediate unconsciousness and death if not promptly revived. After-effects from overexposure are not anticipated except what would be expected if the victim was without oxygen for more than 3 to 5 minutes (asphyxiation). The "rotten egg" odor of hydrogen sulfide is not a reliable indicator for warning of exposure, since olfactory fatigue (loss of smell) readily occurs, especially at concentrations above 50 ppm. At high concentrations, the victim may not even recognize the odor before becoming unconscious.
Ingestion	Aspiration hazard if liquid is inhaled into lungs, particularly from vomiting after ingestion. Aspiration may result in chemical pneumonia, severe lung damage, respiratory failure and even death. Ingestion may cause gastrointestinal disturbances, including irritation, nausea, vomiting and diarrhea, and central nervous (brain) effects similar to alcohol intoxication. In severe cases, tremors, convulsions, loss of consciousness, coma, respiratory arrest and death may occur.
Skin irritation	Practically non-toxic if absorbed following acute (single) exposure. May cause skin irritation with prolonged or repeated contact. Liquid may be absorbed through the skin in toxic amounts if large areas of skin are repeatedly exposed. Rare, precancerous warts on the forearms, backs of hands and scrotum have been

reported from prolonged or repeated skin contact.

Eye irritation Irritating to eyes.

Chronic exposure This material contains polynuclear aromatic hydrocarbons (PNAs), some of which are animal carcinogens. Similar products produced skin cancer and systemic toxicity in laboratory animals following repeated applications. The significance of these results to human exposures has not been determined - see Section 11 Toxicological Information. Contains benzene, which can cause blood disease, including anemia and leukemia. Suspect reproductive hazard - contains material which may injure unborn child.

Target organs Skin, Eyes, Central nervous system, Respiratory system, Kidney, Liver

Component: :

Petroleum; Crude oil	8002-05-9	Acute oral toxicity: LD50 rat Dose: 5,001 mg/kg Acute dermal toxicity: LD50 rabbit Dose: 2,001 mg/kg Skin irritation: Result: Mild skin irritation Eye irritation: Result: Mild eye irritation Carcinogenicity: N11.00418605
Toluene	108-88-3	Acute oral toxicity: LD50 rat Dose: 636 mg/kg Acute dermal toxicity: LD50 rabbit Dose: 12,124 mg/kg Acute inhalation toxicity: LC50 rat Dose: 49 mg/l Exposure time: 4 h Skin irritation: Classification: Irritating to skin. Result: Mild skin irritation Prolonged skin contact may defat the skin and produce dermatitis. Eye irritation: Classification: Irritating to eyes. Result: Mild eye irritation
Xylene	1330-20-7	Acute oral toxicity: LD50 rat Dose: 2,840 mg/kg Acute dermal toxicity: LD50 rabbit Dose: ca. 4,500 mg/kg Acute inhalation toxicity: LC50 rat Dose: 6,350 mg/l Exposure time: 4 h Skin irritation: Classification: Irritating to skin. Result: Mild skin irritation Repeated or prolonged exposure may cause skin irritation and dermatitis, due to degreasing properties of the product. Eye irritation: Classification: Irritating to eyes. Result: Mild eye irritation
Naphthalene	91-20-3	Acute oral toxicity: LD50 rat Dose: 2,001 mg/kg Acute dermal toxicity: LD50 rat Dose: 2,501 mg/kg Acute inhalation toxicity: LC50 rat Dose: 101 mg/l Exposure time: 4 h Skin irritation: Classification: Irritating to skin. Result: Mild skin irritation Eye irritation: Classification: Irritating to eyes. Result: Mild eye irritation

		Carcinogenicity: N11.00422130
Benzene	71-43-2	Acute oral toxicity: LD50 rat Dose: 930 mg/kg Acute inhalation toxicity: LC50 rat Dose: 44 mg/l Exposure time: 4 h Skin irritation: Classification: Irritating to skin. Result: Mild skin irritation Repeated or prolonged exposure may cause skin irritation and dermatitis, due to degreasing properties of the product. Eye irritation: Classification: Irritating to eyes. Result: Risk of serious damage to eyes.
Pentane	109-66-0	Acute oral toxicity: LD50 rat Dose: 2,001 mg/kg Acute inhalation toxicity: LC50 rat Dose: 364 mg/l Exposure time: 4 h Skin irritation: Repeated or prolonged exposure may cause skin irritation and dermatitis, due to degreasing properties of the product. Eye irritation: Classification: Irritating to eyes. Result: Mild eye irritation
Cyclohexane	110-82-7	Acute dermal toxicity: LD50 rabbit Dose: 2,001 mg/kg Acute inhalation toxicity: LC50 rat Dose: 14 mg/l Exposure time: 4 h Skin irritation: Classification: Irritating to skin. Result: Skin irritation Eye irritation: Classification: Irritating to eyes. Result: Mild eye irritation
Ethylbenzene	100-41-4	Acute oral toxicity: LD50 rat Dose: 3,500 mg/kg Acute dermal toxicity: LD50 rabbit Dose: 15,500 mg/kg Acute inhalation toxicity: LC50 rat Dose: 18 mg/l Exposure time: 4 h Skin irritation: Classification: Irritating to skin. Result: Mild skin irritation Eye irritation: Classification: Irritating to eyes. Result: Risk of serious damage to eyes.
Heptane [and isomers]	142-82-5	Acute oral toxicity: LD50 rat Dose: 15,001 mg/kg Acute inhalation toxicity: LC50 rat Dose: 103 g/m3 Exposure time: 4 h Skin irritation: Classification: Irritating to skin. Result: Skin irritation Repeated or prolonged exposure may cause skin irritation and dermatitis, due to degreasing properties of the product. Eye irritation: Classification: Irritating to eyes. Result: Mild eye irritation
N-hexane	110-54-3	Acute oral toxicity: LD50 rat Dose: 25,000 mg/kg Acute dermal toxicity: LD50 rabbit Dose: 2,001 mg/kg Acute inhalation toxicity: LC50 rat Dose: 171.6 mg/l Exposure time: 4 h Skin irritation: Classification: Irritating to skin. Result: Skin irritation Eye irritation: Classification: Irritating to eyes. Result: Mild eye irritation Teratogenicity: N11.00418960

Carcinogenicity

NTP	Naphthalene (CAS-No.: 91-20-3) Benzene (CAS-No.: 71-43-2)
IARC	Gasoline, natural; Low boiling point naphtha (CAS-No.: 8006-61-9) Naphthalene (CAS-No.: 91-20-3) Benzene (CAS-No.: 71-43-2) Ethylbenzene (CAS-No.: 100-41-4)
OSHA	Benzene (CAS-No.: 71-43-2)
CA Prop 65	WARNING! This product contains a chemical known to the State of California to cause birth defects or other reproductive harm. Toluene (CAS-No.: 108-88-3) Benzene (CAS-No.: 71-43-2)

SECTION 12. ECOLOGICAL INFORMATION

Additional ecological information : Keep out of sewers, drainage areas, and waterways. Report spills and releases, as applicable, under Federal and State regulations.

Component:

N-hexane	110-54-3	Toxicity to fish: LC50 Species: Pimephales promelas (fathead minnow) Dose: 2.5 mg/l Exposure time: 96 h Acute and prolonged toxicity for aquatic invertebrates: EC50 Species: Daphnia magna (Water flea) Dose: 2.1 mg/l Exposure time: 48 h
Sulfur	7704-34-9	Acute and prolonged toxicity for aquatic invertebrates: EC0 Species: Daphnia magna (Water flea) Dose: > 10,000 mg/l Exposure time: 24 h

SECTION 13. DISPOSAL CONSIDERATIONS

Disposal : Consult federal, state and local waste regulations to determine appropriate waste characterization of material and allowable disposal methods.

SECTION 14. TRANSPORT INFORMATION

CFR

Proper shipping name	:	PETROLEUM CRUDE OIL
UN-No.	:	1267
Class	:	3
Packing group	:	II

TDG

Proper shipping name	:	PETROLEUM CRUDE OIL
UN-No.	:	UN1267
Class	:	3
Packing group	:	II

IATA Cargo Transport

UN UN-No.	:	UN1267
Description of the goods	:	PETROLEUM CRUDE OIL
Class	:	3
Packaging group	:	II
ICAO-Labels	:	3
Packing instruction (cargo aircraft)	:	364
Packing instruction (cargo aircraft)	:	Y341

IATA Passenger Transport

UN UN-No.	:	UN1267
Description of the goods	:	PETROLEUM CRUDE OIL
Class	:	3
Packaging group	:	II
ICAO-Labels	:	3
Packing instruction (passenger aircraft)	:	353
Packing instruction (passenger aircraft)	:	Y341

IMDG-Code

UN-No.	:	UN 1267
Description of the goods	:	PETROLEUM CRUDE OIL
Class	:	3
Packaging group	:	II
IMDG-Labels	:	3
EmS Number	:	F-E S-E
Marine pollutant	:	No

SECTION 15. REGULATORY INFORMATION

TSCA Status	:	On TSCA Inventory
DSL Status	:	All components of this product are on the Canadian DSL list.
SARA 311/312 Hazards	:	Fire Hazard Acute Health Hazard Chronic Health Hazard

CERCLA SECTION 103 and SARA SECTION 304 (RELEASE TO THE ENVIROMENT)
The CERCLA definition of hazardous substances contains a “petroleum exclusion” clause which exempts crude oil. Fractions of crude oil, and products (both finished and intermediate) from the crude oil refining process and any indigenous components of such from the CERCLA Section 103 reporting requirements. However, other federal reporting requirements, including SARA Section 304, as well as the Clean Water Act may still apply.

CERCLA Reportable Quantity : 104 lbs

MASS RTK — US. Massachusetts Commonwealth's Right-to-Know Law (Appendix A to 105 Code of Massachusetts Regulations Section 670.000)

Components	CAS-No.
Benzene	71-43-2
Hydrogen Sulfide	7783-06-4
Sulfur	7704-34-9
N-hexane	110-54-3
Petroleum; Crude oil	8002-05-9

SARA III — US. EPA Emergency Planning and Community Right-To-Know Act (EPCRA) SARA Title III Section 313 Toxic Chemicals (40 CFR 372.65) - Supplier Notification Required

Components	CAS-No.
N-hexane	110-54-3
Benzene	71-43-2

SARA III — US. EPA Emergency Planning and Community Right-To-Know Act (EPCRA) SARA Title III Section 302 Extremely Hazardous Substance (40 CFR355, Appendix A)

Components	CAS-No.
hydrogen sulfide	7783-06-4

PENN RTK — US. Pennsylvania Worker and Community Right-to-Know Law (34 Pa. Code Chap. 301-323)

Components	CAS-No.
Benzene	71-43-2
Hydrogen Sulfide	7783-06-4
Sulfur	7704-34-9
N-hexane	110-54-3
Petroleum; Crude oil	8002-05-9

NJ RTK — US. New Jersey Worker and Community Right-to-Know Act (New Jersey Statute Annotated Section 34:5A-5)

Components	CAS-No.
Benzene	71-43-2
Hydrogen Sulfide	7783-06-4
Sulfur	7704-34-9
N-hexane	110-54-3
Petroleum; Crude oil	8002-05-9

California Prop. 65 : WARNING! This product contains a chemical known to the State of California to cause cancer.

Benzene 71-43-2

WARNING! This product contains a chemical known to the State of California to

cause birth defects or other reproductive harm.

Benzene	71-43-2

SECTION 16. OTHER INFORMATION

Further information

The information provided in this Safety Data Sheet is correct to the best of our knowledge, information and belief at the date of its publication. The information given is designed only as guidance for safe handling, use, processing, storage, transportation, disposal and release and is not to be considered a warranty or quality specification. The information relates only to the specific material designated and may not be valid for such material used in combination with any other materials or in any process, unless specified in the text.

Revision Date : 02/02/2013

Safety Data Sheet
Crude Oil, Sweet Heavy

NFPA:

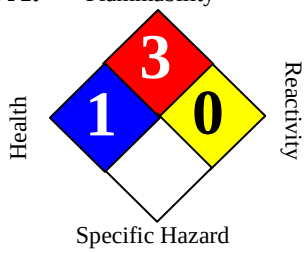

SECTION 1. PRODUCT AND COMPANY IDENTIFICATION

Product name	:	Crude Oil, Sweet Heavy			
Synonyms	:	Sweet Heavy Crude Oil, RS295, 888100005156			
SDS Number	:	888100005156	**Version**	:	1.3
Product Use Description	:	Industrial feedstock			
Company	:	For: Tesoro Refining & Marketing Co. 19100 Ridgewood Parkway Drive, San Antonio, TX 78259			
Tesoro Call Center	:	(877) 783-7676	**Chemtrec (Emergency Contact)**	:	(800) 424-9300

SECTION 2. HAZARDS IDENTIFICATION

Classifications : Flammable Liquid – Category 2 or 3 depending on variable composition.
Aspiration Hazard – Category 1.
Carcinogenicity – Category 2
Specific Target Organ Toxicity (Repeated Exposure) – Category 2
Specific Target Organ Toxicity (Single Exposure) – Category 3
Eye Irritant – Category 2B
Chronic Aquatic Toxicity – Category 2

Pictograms

Signal Word : DANGER

Hazard Statements : Highly flammable liquid and vapor.
May be fatal if swallowed and enters airways – do not siphon gasoline by mouth.
Suspected of causing cancer if repeated over-exposure by inhalation and/or skin contact occurs.
May cause damage to liver, kidneys and nervous system by prolonged and repeated inhalation or skin contact.
Causes eye irritation. Can be absorbed through skin.
Repeated or prolonged skin contact can cause irritation and dermatitis.
May cause drowsiness or dizziness.
Harmful to aquatic life.
May release hydrogen sulfide (H2S) gas, a toxic-by-inhalation material. See

Section 11.

Precautionary statements

Prevention : Obtain special instructions before use.
Do not handle until all safety precautions have been read and understood.
Keep away from heat, sparks, open flames, welding and hot surfaces.
No smoking.
Keep container tightly closed.
Ground and/or bond container and receiving equipment.
Use explosion-proof electrical equipment.
Use only non-sparking tools (if tools are used in flammable atmosphere).
Take precautionary measures against static discharge.
Wear gloves, eye protection and face protection (as needed to prevent skin and eye contact with liquid).
Wash hands or liquid-contacted skin thoroughly after handling.
Do not eat, drink or smoke when using this product.
Do not breathe vapors.
Use only outdoors or in a well-ventilated area.

Response In case of fire: Use dry chemical, CO2, water spray or fire-fighting foam to extinguish.
If swallowed: Immediately call a poison center, doctor, hospital emergency room, medical clinic or 911. Do NOT induce vomiting. Rinse mouth.
If on skin (or hair): Take off immediately all contaminated clothing. Rinse skin with water/shower.
If in eye: Rinse cautiously with water for several minutes. Remove contact lenses,
if present and easy to do. Continue rinsing.
If skin or eye irritation persists, get medical attention.
If inhaled: Remove person to fresh air and keep comfortable for breathing.
Get medical attention if you feel unwell.

Storage Store in a well-ventilated place. Keep cool. Store locked up. Keep container tightly closed . Use only approved containers.

Disposal Dispose of contents/containers to approved disposal site in accordance with local, regional, national, and/or international regulations.

SECTION 3. COMPOSITION/INFORMATION ON INGREDIENTS

Component	CAS-No.	Weight %
Petroleum; Crude oil	8002-05-9	100%
Toluene	108-88-3	0 - 7%
N-hexane	110-54-3	0 - 5%
Benzene	71-43-2	0.1 - 3%

SECTION 4. FIRST AID MEASURES

Inhalation	:	Move to fresh air. Administer oxygen or artificial respiration if needed. Seek medical attention immediately.
Skin contact	:	Take off all contaminated clothing immediately. Wash off immediately with soap and plenty of water. Seek medical attention if irritation or skin thermal burns occur.
Eye contact	:	In case of eye contact, immediately flush with low pressure, cool water for at least 15 minutes, opening eyelids to ensure flushing. Hold the eyelids open and away from the eyeballs to ensure that all surfaces are flushed thoroughly. If symptoms persist, seek medical attention immediately.
Ingestion	:	Do NOT induce vomiting. Never give anything by mouth to an unconscious person. Seek medical attention immediately. If vomiting does occur naturally, keep head below the hips to reduce the risks of aspiration. Small amounts of material which enter the mouth should be rinsed out until the taste is dissipated.

SECTION 5. FIRE-FIGHTING MEASURES

Suitable extinguishing media	:	SMALL FIRES: Any extinguisher suitable for Class B fires, dry chemical, CO2, water spray, or fire-fighting foam. LARGE FIRES: Water spray, fog or fire-fighting foam. Water may be ineffective for fighting the fire, but may be used to cool fire-exposed containers..
Specific hazards during fire fighting	:	Vapors are heavier than air and may travel long distances to a point of ignition and flash back. Do not allow liquid runoff to enter sewers or public waters. Gas may form explosive mixture with air.
Special protective equipment for fire-fighters	:	Use NIOSH/MSHA approved positive pressure self-contained breathing apparatus and fully protective clothing such as bunker gear if needed to prevent exposure.
Further information	:	Isolate area, particularly around ends of storage vessels. Cool tanks, shells, and containers exposed to fire and excessive heat with water. For massive fires the use of unmanned hose holders or monitor nozzles may be advantageous to further minimize personnel exposure. Major fires may require withdrawal, allowing the tank to burn. Large storage tank fires typically require specially trained personnel and equipment to extinguish the fire, often including the need for properly applied fire fighting foam.

SECTION 6. ACCIDENTAL RELEASE MEASURES

Personal precautions	:	Evacuate nonessential personnel and remove or secure all ignition sources. Consider wind direction; stay upwind and uphill, if possible. Evaluate the direction of product travel, diking, sewers, etc. to contain spill areas.
Environmental precautions	:	Carefully contain and stop the source of the spill, if safe to do so. Protect bodies of water by diking, absorbents, or absorbent boom, if possible. Do not flush down sewer or drainage systems, unless system is designed and permitted to handle such material. The use of fire fighting foam may be useful in certain situations to reduce vapors.
Methods for cleaning up	:	Take up with sand or oil absorbing materials. Carefully shovel, scoop or sweep up into a waste container for reclamation or disposal - caution, flammable vapors may accumulate in closed containers. Response and clean-up crews must be properly trained and must utilize proper protective equipment (see Section 8).

SECTION 7. HANDLING AND STORAGE

Precautions for safe handling : Handle as a combustible liquid. Keep product and empty containers away from fire, sparks and heated surfaces. Electrical equipment should be approved for classified area. Bond and ground containers during product transfer to reduce the possibility of static-initiated fire or explosion.

Conditions for safe storage, including incompatibilities : Keep away from flame, sparks, excessive temperatures and open flame. Use approved vented containers. Keep containers closed and clearly labeled. Empty product containers or vessels may contain explosive vapors. Do not pressurize, cut, heat, weld or expose containers to sources of ignition. Store in a well-ventilated area. This storage area should comply with NFPA 30 "Flammable and Combustible Liquid Code". Avoid storage near incompatible materials. The cleaning of tanks previously containing this product should follow API Recommended Practice (RP) 2013 "Cleaning Mobile Tanks In Flammable and Combustible Liquid Service" and API RP 2015 "Cleaning Petroleum Storage Tanks".

SECTION 8. EXPOSURE CONTROLS / PERSONAL PROTECTION

Exposure Guidelines

List	Components	CAS-No.	Type:	Value
OSHA	Benzene	71-43-2	TWA	1 ppm
		71-43-2	STEL	5 ppm
		71-43-2	OSHA_ACT	0.5 ppm
OSHA Z1	N-hexane	110-54-3	PEL	500 ppm 1,800 mg/m3
	Hydrogen sulfide	7783-06-4	STEL	20 ppm
ACGIH	Toluene	108-88-3	TWA	50 ppm
	N-hexane	110-54-3	TWA	50 ppm
	Benzene	71-43-2	TWA	0.5 ppm
		71-43-2	STEL	2.5 ppm
	Hydrogen Sulfide	7783-06-4	PEL	1 ppm
			STEL	5 ppm

Engineering measures : Use adequate ventilation to keep gas and vapor concentrations of this product below occupational exposure and flammability limits, particularly in confined spaces.

Eye protection : Ensure that eyewash stations and safety showers are close to the workstation location. Goggles, and face shield or full facepiece pressure-demand supplied air respirator as needed to prevent eye and face contact.

Hand protection : Gloves constructed of nitrile, neoprene, or PVC are recommended. The resistance of specific material may vary from product to product as well as with degree of exposure.

Skin and body protection : Chemical protective clothing such as DuPont TyChem ®, Barricade or equivalent, recommended based on degree of exposure.

Respiratory protection : A NIOSH/ MSHA-approved air-purifying respirator with organic vapor cartridges or

canister may be permissible under certain circumstances where airborne concentrations are or may be expected to exceed exposure limits or for odor or irritation. Protection provided by air-purifying respirators is limited. Refer to OSHA 29 CFR 1910.134, ANSI Z88.2-1992, NIOSH Respirator Decision Logic, and the manufacturer for additional guidance on respiratory protection selection. Use a NIOSH/ MSHA-approved positive-pressure supplied-air respirator if there is a potential for uncontrolled release, exposure levels are not known, in oxygen-deficient atmospheres, or any other circumstance where an air-purifying respirator may not provide adequate protection.

Hygiene measures : Avoid repeated and/or prolonged skin exposure. Wash hands before eating, drinking, smoking, or using toilet facilities. DO NOT use gasoline, kerosene, solvents, or harsh abrasive skin cleaners to clean skin. Waterless hand cleaners are effective. Promptly remove contaminated clothing and launder before reuse. Consider the need to discard contaminated leather shoes and gloves. Use good personal hygiene practices.

SECTION 9. PHYSICAL AND CHEMICAL PROPERTIES

Appearance	Typical is a thick, dark yellow to brown or greenish black liquid
Odor	Petroleum asphalt odor. Hydrogen sulfide (H2S) has a characteristic rotten egg odor with an odor threshold as low as 10 parts per billion or even less. However, this odor should not be used as a warning property because H2S can deaden the sense of smell. H2S concentrations can be measured with an H2S meter or colorimetric indicating tubes.
Odor threshold	Odor threshold varies with the composition of the crude oil
pH	Not applicable
Melting point/freezing point	-30° to 30°C has been reported as a pour point
Initial boiling point & range	Distillation is typically not performed above 300°C at atmospheric pressure
Flash point	-7 to 75°C
Evaporation rate	Higher initially and declines if lighter components evaporate
Flammability (solid, gas)	Flammable gas or vapors released by liquid
Upper explosive limit	Varies with composition but typical is approximately 7%
Lower explosive limit	Varies with composition but typical is approximately 0.7%
Vapor pressure	6 to 45 kPa
Vapor density (air = 1)	No data available
Relative density (water = 1)	0.9 to 1.0 g/mL is typical at 15°C
Solubility (in water)	1 to 2% by weight is maximum reported for soluble components of crude oil
Partition coefficient (n-octanol/water)	2 to > 6 as log Pow
Auto-ignition temperature	Varies with composition
Decomposition temperature	Will evaporate or boil and possibly ignite before decomposition occurs.
Kinematic viscosity	5 to > 1300 mm^2/s at 38°C

SECTION 10. STABILITY AND REACTIVITY

Reactivity	: Vapors may form explosive mixture with air. Hazardous polymerization does not occur.
Chemical stability	Stable under normal conditions.
Possibility of hazardous reactions	Can react with strong oxidizing agents, peroxides, acids and alkalies.
Conditions to avoid	Avoid high temperatures, open flames, sparks, welding, smoking and other ignition sources. Avoid static charge accumulation and discharge (see Section 7).
Hazardous decomposition products	Ignition and burning can release carbon monoxide, carbon dioxide, non-combusted hydrocarbons (smoke) and sulfur dioxide.

SECTION 11. TOXICOLOGICAL INFORMATION

Inhalation	: May cause respiratory tract irritation. Central nervous system (brain) effects may include headache, dizziness, loss of balance and coordination, unconsciousness, coma, respiratory failure, and death. Irritating and toxic hydrogen sulfide gas may be present. Greater than 15 - 20 ppm continuous exposure can cause mucous membrane and respiratory tract irritation. 50 - 500 ppm can cause headache, nausea, and dizziness. Continued exposure at these levels can lead to loss of reasoning and balance, difficulty in breathing, fluid in the lungs, and possible loss of consciousness. Greater than 500 ppm can cause rapid unconsciousness due to respiratory paralysis and death by suffocation unless the victim is removed from exposure and successfully resuscitated. Greater than 1000 ppm can cause immediate unconsciousness and death if not promptly revived. After-effects from overexposure are not anticipated except what would be expected if the victim was without oxygen for more than 3 to 5 minutes (asphyxiation). The "rotten egg" odor of hydrogen sulfide is not a reliable indicator for warning of exposure, since olfactory fatigue (loss of smell) readily occurs, especially at concentrations above 50 ppm. At high concentrations, the victim may not even recognize the odor before becoming unconscious.
Ingestion	Aspiration hazard if liquid is inhaled into lungs, particularly from vomiting after ingestion. Aspiration may result in chemical pneumonia, severe lung damage, respiratory failure and even death. Ingestion may cause gastrointestinal disturbances, including irritation, nausea, vomiting and diarrhea, and central nervous (brain) effects similar to alcohol intoxication. In severe cases, tremors, convulsions, loss of consciousness, coma, respiratory arrest and death may occur.
Skin irritation	Practically non-toxic if absorbed following acute (single) exposure. May cause skin irritation with prolonged or repeated contact. Liquid may be absorbed through the skin in toxic amounts if large areas of skin are repeatedly exposed. Rare, precancerous warts on the forearms, backs of hands and scrotum have been reported from prolonged or repeated skin contact.
Eye irritation	Irritating to eyes.
Chronic exposure	This material contains polynuclear aromatic hydrocarbons (PNAs), some of which are animal carcinogens. Similar products produced skin cancer and systemic toxicity in laboratory animals following repeated applications. The significance of these results to human exposures has not been determined - see Section 11 Toxicological Information. Contains benzene, which can cause blood disease, including anemia and leukemia. Suspect reproductive hazard - contains material which may injure unborn child.

Target organs Skin, Eyes, Central nervous system, Respiratory system, Kidney, Liver

Component

Petroleum; Crude oil	8002-05-9	Acute oral toxicity: LD50 rat Dose: 5,001 mg/kg Acute dermal toxicity: LD50 rabbit Dose: 2,001 mg/kg Skin irritation: Result: Mild skin irritation Eye irritation: Result: Mild eye irritation Carcinogenicity: N11.00418605
Toluene	108-88-3	Acute oral toxicity: LD50 rat Dose: 636 mg/kg Acute dermal toxicity: LD50 rabbit Dose: 12,124 mg/kg Acute inhalation toxicity: LC50 rat Dose: 49 mg/l Exposure time: 4 h Skin irritation: Classification: Irritating to skin. Result: Mild skin irritation Prolonged skin contact may defat the skin and produce dermatitis. Eye irritation: Classification: Irritating to eyes. Result: Mild eye irritation
Xylene	1330-20-7	Acute oral toxicity: LD50 rat Dose: 2,840 mg/kg Acute dermal toxicity: LD50 rabbit Dose: ca. 4,500 mg/kg Acute inhalation toxicity: LC50 rat Dose: 6,350 mg/l Exposure time: 4 h Skin irritation: Classification: Irritating to skin. Result: Mild skin irritation Repeated or prolonged exposure may cause skin irritation and dermatitis, due to degreasing properties of the product. Eye irritation: Classification: Irritating to eyes. Result: Mild eye irritation
Naphthalene	91-20-3	Acute oral toxicity: LD50 rat Dose: 2,001 mg/kg Acute dermal toxicity: LD50 rat Dose: 2,501 mg/kg Acute inhalation toxicity: LC50 rat Dose: 101 mg/l Exposure time: 4 h Skin irritation: Classification: Irritating to skin. Result: Mild skin irritation Eye irritation: Classification: Irritating to eyes. Result: Mild eye irritation Carcinogenicity: N11.00422130
Benzene	71-43-2	Acute oral toxicity: LD50 rat Dose: 930 mg/kg Acute inhalation toxicity: LC50 rat Dose: 44 mg/l Exposure time: 4 h Skin irritation: Classification: Irritating to skin. Result: Mild skin irritation Repeated or prolonged exposure may cause skin irritation and dermatitis, due to degreasing properties of the product. Eye irritation: Classification: Irritating to eyes. Result: Risk of serious damage to eyes.

Pentane	109-66-0	Acute oral toxicity: LD50 rat Dose: 2,001 mg/kg Acute inhalation toxicity: LC50 rat Dose: 364 mg/l Exposure time: 4 h Skin irritation: Repeated or prolonged exposure may cause skin irritation and dermatitis, due to degreasing properties of the product. Eye irritation: Classification: Irritating to eyes. Result: Mild eye irritation
Cyclohexane	110-82-7	Acute dermal toxicity: LD50 rabbit Dose: 2,001 mg/kg Acute inhalation toxicity: LC50 rat Dose: 14 mg/l Exposure time: 4 h Skin irritation: Classification: Irritating to skin. Result: Skin irritation Eye irritation: Classification: Irritating to eyes. Result: Mild eye irritation
Ethylbenzene	100-41-4	Acute oral toxicity: LD50 rat Dose: 3,500 mg/kg Acute dermal toxicity: LD50 rabbit Dose: 15,500 mg/kg Acute inhalation toxicity: LC50 rat Dose: 18 mg/l Exposure time: 4 h Skin irritation: Classification: Irritating to skin. Result: Mild skin irritation Eye irritation: Classification: Irritating to eyes. Result: Risk of serious damage to eyes
Heptane [and isomers]	142-82-5	Acute oral toxicity: LD50 rat Dose: 15,001 mg/kg Acute inhalation toxicity: LC50 rat Dose: 103 g/m3 Exposure time: 4 h Skin irritation: Classification: Irritating to skin. Result: Skin irritation Repeated or prolonged exposure may cause skin irritation and dermatitis, due to degreasing properties of the product. Eye irritation: Classification: Irritating to eyes. Result: Mild eye irritation
N-hexane	110-54-3	Acute oral toxicity: LD50 rat Dose: 25,000 mg/kg Acute dermal toxicity: LD50 rabbit Dose: 2,001 mg/kg Acute inhalation toxicity: LC50 rat Dose: 171.6 mg/l Exposure time: 4 h Skin irritation: Classification: Irritating to skin. Result: Skin irritation Eye irritation: Classification: Irritating to eyes. Result: Mild eye irritation Teratogenicity: N11.00418960

Carcinogenicity :

NTP
Naphthalene (CAS-No.: 91-20-3)
Benzene (CAS-No.: 71-43-2)

IARC
Gasoline, natural; Low boiling point naphtha (CAS-No.: 8006-61-9)
Naphthalene (CAS-No.: 91-20-3)
Benzene (CAS-No.: 71-43-2)
Ethylbenzene (CAS-No.: 100-41-4)

OSHA
Benzene (CAS-No.: 71-43-2)

CA Prop 65
WARNING! This product contains a chemical known to the State of California to cause birth defects or other reproductive harm.
Toluene (CAS-No.: 108-88-3)
Benzene (CAS-No.: 71-43-2)

SECTION 12. ECOLOGICAL INFORMATION

Additional ecological information : Keep out of sewers, drainage areas, and waterways. Report spills and releases, as applicable, under Federal and State regulations.

Component:

Toluene 108-88-3

Toxicity to fish:
LC50
Species: Carassius auratus (goldfish)
Dose: 13 mg/l
Exposure time: 96 h

Acute and prolonged toxicity for aquatic invertebrates:
EC50
Species: Daphnia magna (Water flea)
Dose: 11.5 mg/l
Exposure time: 48 h

Toxicity to algae:
IC50
Species: Selenastrum capricornutum (green algae)
Dose: 12 mg/l
Exposure time: 72 h

N-hexane 110-54-3

Toxicity to fish:
LC50
Species: Pimephales promelas (fathead minnow)
Dose: 2.5 mg/l
Exposure time: 96 h

Acute and prolonged toxicity for aquatic invertebrates:
EC50
Species: Daphnia magna (Water flea)
Dose: 2.1 mg/l
Exposure time: 48 h

SECTION 13. DISPOSAL CONSIDERATIONS

Disposal : Consult federal, state and local waste regulations to determine appropriate waste characterization of material and allowable disposal methods.

SECTION 14. TRANSPORT INFORMATION

CFR

Proper shipping name	:	PETROLEUM CRUDE OIL
UN-No.	:	1267
Class	:	3
Packing group	:	III

TDG

Proper shipping name	:	PETROLEUM CRUDE OIL
UN-No.	:	UN1267
Class	:	3
Packing group	:	III

IATA Cargo Transport

UN UN-No.	:	UN1267
Description of the goods	:	PETROLEUM CRUDE OIL
Class	:	3
Packaging group	:	I1I
ICAO-Labels	:	3
Packing instruction (cargo aircraft)	:	366
Packing instruction (cargo aircraft)	:	Y344

IATA Passenger Transport

UN UN-No.	:	UN1267
Description of the goods	:	PETROLEUM CRUDE OIL
Class	:	3
Packaging group	:	III
ICAO-Labels	:	3
Packing instruction (passenger aircraft)	:	355
Packing instruction (passenger aircraft)	:	Y344

IMDG-Code

UN-No.	:	UN 1267
Description of the goods	:	PETROLEUM CRUDE OIL
Class	:	3
Packaging group	:	III
IMDG-Labels	:	3
EmS Number	:	F-E S-E
Marine pollutant	:	No

SECTION 15. REGULATORY INFORMATION

TSCA Status	:	On TSCA Inventory
DSL Status	:	All components of this product are on the Canadian DSL list.
SARA 311/312 Hazards	:	Fire Hazard Acute Health Hazard Chronic Health Hazard

CERCLA SECTION 103 and SARA SECTION 304 (RELEASE TO THE ENVIROMENT)
The CERCLA definition of hazardous substances contains a "petroleum exclusion" clause which exempts crude oil. Fractions of crude oil, and products (both finished and intermediate) from the crude oil refining process and any indigenous components of such from the CERCLA Section 103 reporting requirements. However, other federal reporting requirements, including SARA Section 304, as well as the Clean Water Act may still apply.

CERCLA Reportable Quantity : 111 lbs

MASS RTK — US. Massachusetts Commonwealth's Right-to-Know Law (Appendix A to 105 Code of Massachusetts Regulations Section 670.000)

Components	CAS-No.
Petroleum; Crude oil	8002-05-9
Toluene	108-88-3
N-hexane	110-54-3
Benzene	71-43-2

SARA III — US. EPA Emergency Planning and Community Right-To-Know Act (EPCRA) SARA Title III Section 313 Toxic Chemicals (40 CFR 372.65) - Supplier Notification Required

Components	CAS-No.
Toluene	108-88-3
N-hexane	110-54-3
Benzene	71-43-2

SARA III — US. EPA Emergency Planning and Community Right-To-Know Act (EPCRA) SARA Title III Section 302 Extremely Hazardous Substance (40 CFR355, Appendix A)

Components	CAS-No.

PENN RTK — US. Pennsylvania Worker and Community Right-to-Know Law (34 Pa. Code Chap. 301-323)

Components	CAS-No.
Petroleum; Crude oil	8002-05-9
Toluene	108-88-3
N-hexane	110-54-3
Benzene	71-43-2

NJ RTK — US. New Jersey Worker and Community Right-to-Know Act (New Jersey Statute Annotated Section 34:5A-5)

Components	CAS-No.
Petroleum; Crude oil	8002-05-9
Toluene	108-88-3
N-hexane	110-54-3
Benzene	71-43-2

California Prop. 65 : WARNING! This product contains a chemical known to the State of California to cause cancer.

benzene 71-43-2

WARNING! This product contains a chemical known to the State of California to cause birth defects or other reproductive harm.

Toluene	108-88-3
Benzene	71-43-2

SECTION 16. OTHER INFORMATION

Further information

The information provided in this Safety Data Sheet is correct to the best of our knowledge, information and belief at the date of its publication. The information given is designed only as guidance for safe handling, use, processing, storage, transportation, disposal and release and is not to be considered a warranty or quality specification. The information relates only to the specific material designated and may not be valid for such material used in combination with any other materials or in any process, unless specified in the text.

Revision Date : 02/02/2013

Safety Data Sheet
Crude oil, light sweet

NFPA:

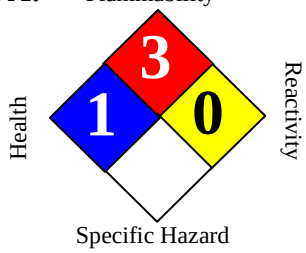

SECTION 1. PRODUCT AND COMPANY IDENTIFICATION

Product name	:	Crude oil, light sweet			
Synonyms	:	Petroleum Crude Oil, Crude Sweet, 888100005188			
SDS Number	:	888100005188	**Version**	:	1.3
Product Use Description	:	Industrial feedstock			
Company	:	For: Tesoro Refining & Marketing Co. 19100 Ridgewood Parkway, San Antonio, TX 78259			
Tesoro Call Center	:	(877) 783-7676	**Chemtrec (Emergency Contact)**	:	(800) 424-9300

SECTION 2. HAZARDS IDENTIFICATION

Classifications : Flammable Liquid – Category 2 or 3 depending on variable composition.
Aspiration Hazard – Category 1.
Carcinogenicity – Category 2
Specific Target Organ Toxicity (Repeated Exposure) – Category 2
Specific Target Organ Toxicity (Single Exposure) – Category 3
Eye Irritant – Category 2B
Chronic Aquatic Toxicity – Category 2

Pictograms

Signal Word : DANGER

Hazard Statements : Highly flammable liquid and vapor.
May be fatal if swallowed and enters airways – do not siphon gasoline by mouth.
Suspected of causing cancer if repeated over-exposure by inhalation and/or skin contact occurs.
May cause damage to liver, kidneys and nervous system by prolonged and repeated inhalation or skin contact.
Causes eye irritation. Can be absorbed through skin.
Repeated or prolonged skin contact can cause irritation and dermatitis.
May cause drowsiness or dizziness.
Harmful to aquatic life.
May release hydrogen sulfide (H2S) gas, a toxic-by-inhalation material. See

Section 11.

Precautionary statements

Prevention

Obtain special instructions before use.
Do not handle until all safety precautions have been read and understood.
Keep away from heat, sparks, open flames, welding and hot surfaces.
No smoking.
Keep container tightly closed.
Ground and/or bond container and receiving equipment.
Use explosion-proof electrical equipment.
Use only non-sparking tools (if tools are used in flammable atmosphere).
Take precautionary measures against static discharge.
Wear gloves, eye protection and face protection (as needed to prevent skin and eye contact with liquid).
Wash hands or liquid-contacted skin thoroughly after handling.
Do not eat, drink or smoke when using this product.
Do not breathe vapors.
Use only outdoors or in a well-ventilated area.

Response

In case of fire: Use dry chemical, CO2, water spray or fire-fighting foam to extinguish.
If swallowed: Immediately call a poison center, doctor, hospital emergency room, medical clinic or 911. Do NOT induce vomiting. Rinse mouth.
If on skin (or hair): Take off immediately all contaminated clothing. Rinse skin with water/shower.
If in eye: Rinse cautiously with water for several minutes. Remove contact lenses, if present and easy to do. Continue rinsing.
If skin or eye irritation persists, get medical attention.
If inhaled: Remove person to fresh air and keep comfortable for breathing.
Get medical attention if you feel unwell.

Storage

Store in a well-ventilated place. Keep cool. Store locked up. Keep container tightly closed . Use only approved containers.

Disposal

Dispose of contents/containers to approved disposal site in accordance with local, regional, national, and/or international regulations

SECTION 3. COMPOSITION/INFORMATION ON INGREDIENTS

Component	CAS-No.	Weight %
Petroleum; Crude oil	8002-05-9	80 - 85%
Benzene	71-43-2	5 - 7%
Toluene	108-88-3	5 - 7%
Ethylbenzene	100-41-4	5 - 7%

Xylene	1330-20-7	5 - 7%
Hydrogen Sulfide	7783-06-4	< 0.5%

SECTION 4. FIRST AID MEASURES

Inhalation : Move to fresh air. If not breathing, give artificial respiration. Administer oxygen or artificial respiration if needed. Seek medical attention immediately.

Skin contact : Take off contaminated clothing and shoes immediately. Wash off with soap and plenty of water. Seek medical advice if symptoms persist or develop. Seek medical attention if irritation or skin thermal burns occur.

Eye contact : In case of eye contact, immediately flush with low pressure, cool water for at least 15 minutes, opening eyelids to ensure flushing. Hold the eyelids open and away from the eyeballs to ensure that all surfaces are flushed thoroughly. Seek medical advice if symptoms persist or develop.

Ingestion : Do NOT induce vomiting. Do not give liquids. Seek medical attention immediately. If vomiting does occur naturally, keep head below the hips to reduce the risks of aspiration. Monitor for breathing difficulties. Small amounts of material which enter the mouth should be rinsed out until the taste is dissipated.

SECTION 5. FIRE-FIGHTING MEASURES

Suitable extinguishing media : SMALL FIRES: Any extinguisher suitable for Class B fires, dry chemical, CO2, water spray, fire-fighting foam. LARGE FIRES: Water spray, fog or fire-fighting foam. Water may be ineffective for fighting the fire, but may be used to cool fire-exposed containers.

Specific hazards during fire fighting : Above the flash point, explosive vapor-air mixtures may be formed. Vapors can flow along surfaces to distant ignition source and flash back. Dangerous fire and explosion hazard when exposed to heat, sparks or flame. Do not allow liquid runoff to enter sewers or public waters.

Special protective equipment for fire-fighters : Firefighters should wear self-contained breathing apparatus and full protective clothing as need for protection from heat and airborne combustion products. Withdraw immediately from the area if there is a rising sound from a venting safety device or discoloration of vessels, tanks, or pipelines.

Further information : Isolate area around container involved in fire. Cool tanks, shells, and containers exposed to fire and excessive heat with water. For massive fires the use of unmanned hose holders or monitor nozzles may be advantageous to further minimize personnel exposure. Major fires may require withdrawal, allowing the tank to burn. Large storage tank fires typically require specially trained personnel and equipment to extinguish the fire, often including the need for properly applied fire fighting foam.

SECTION 6. ACCIDENTAL RELEASE MEASURES

Personal precautions : Evacuate nonessential personnel and remove or secure all ignition sources. Consider wind direction; stay upwind and uphill, if possible. Evaluate the direction of product travel, diking, sewers, etc. to contain spill areas.

Environmental precautions : Carefully contain and stop the source of the spill, if safe to do so. Do not flush down sewer or drainage systems, unless system is designed and permitted to

handle such material. The use of fire fighting foam may be useful in certain situations to reduce vapors. WASTE DISPOSAL METHOD: Dispose of in accordance with Local, State, and Federal Regulations.

Methods for cleaning up : Take up with sand or oil absorbing materials. Carefully shovel, scoop or sweep up into a waste container for reclamation or disposal - caution, flammable vapors may accumulate in closed containers. Response and clean-up crews must be properly trained and must utilize proper protective equipment (see Section 8).

Additional advice : Inform the responsible authorities in case of leakage, or of entry into waterways, soil or drains.

SECTION 7. HANDLING AND STORAGE

Precautions for safe handling : Handle as a combustible liquid. Keep product and empty containers away from fire, sparks and heated surfaces. Electrical equipment should be approved for classified area. Bond and ground containers during product transfer to reduce the possibility of static-initiated fire or explosion.

Conditions for safe storage, including incompatibilities : Keep away from flame, sparks, excessive temperatures and open flame. Use approved vented containers. Keep containers closed and clearly labeled. Empty product containers or vessels may contain explosive vapors. Do not pressurize, cut, heat, weld or expose containers to sources of ignition. Store in a well-ventilated area. This storage area should comply with NFPA 30 "Flammable and Combustible Liquid Code". Avoid storage near incompatible materials. The cleaning of tanks previously containing this product should follow API Recommended Practice (RP) 2013 "Cleaning Mobile Tanks In Flammable and Combustible Liquid Service" and API RP 2015 "Cleaning Petroleum Storage Tanks". The cleaning of tanks previously containing this product should follow API Recommended Practice (RP) 2013 "Cleaning Mobile Tanks In Flammable and Combustible Liquid Service" and API RP 2015 "Cleaning Petroleum Storage Tanks". Hydrogen sulfide may accumulate in tanks and bulk transport compartments. Consider appropriate respiratory protection (see Section 8). Stand upwind. Avoid vapors when opening hatches and dome covers. Confined spaces should be ventilated and gas tested prior to entry.

SECTION 8. EXPOSURE CONTROLS / PERSONAL PROTECTION

Exposure Guidelines

List	Components	CAS-No.	Type:	Value
OSHA	Benzene	71-43-2	TWA	1 ppm
		71-43-2	STEL	5 ppm
		71-43-2	OSHA_ACT	0.5 ppm
OSHA Z1	Ethylbenzene	100-41-4	PEL	100 ppm 435 mg/m3
	Xylene	1330-20-7	PEL	100 ppm 435 mg/m3
	Hydrogen sulfide	7783-06-4	STEL	20 ppm
ACGIH	Benzene	71-43-2	TWA	0.5 ppm
		71-43-2	STEL	2.5 ppm
	Toluene	108-88-3	TWA	50 ppm

	Ethylbenzene	100-41-4	TWA	100 ppm
		100-41-4	STEL	125 ppm
	Xylene	1330-20-7	TWA	100 ppm
		1330-20-7	STEL	150 ppm
	Hydrogen Sulfide	7783-06-4	TWA	1 ppm
		7783-06-4	STEL	5 ppm

Engineering measures : Use adequate ventilation to keep gas and vapor concentrations of this product below occupational exposure and flammability limits, particularly in confined spaces.

Eye protection : Safety glasses or goggles are recommended where there is a possibility of splashing or spraying.

Hand protection : Gloves constructed of nitrile, neoprene, or PVC are recommended.

Skin and body protection : Chemical protective clothing such as DuPont Tyvek QC, TyChem® or equivalent, recommended based on degree of exposure. The resistance of specific material may vary from product to product as well as with degree of exposure.

Respiratory protection : If hydrogen sulfide concentration may exceed permissible exposure limit, a positive-pressure SCBA or Type C supplied air respirator with escape bottle is required as respiratory protection. If hydrogen sulfide concentration is below H2S permissible exposure limit a NIOSH/ MSHA-approved air-purifying respirator with acid gas cartridges may be acceptable for odor control, but continuous air monitoring for H2S is recommended. Protection provided by air-purifying respirators is limited. Refer to OSHA 29 CFR 1910.134, ANSI Z88.2-1992, NIOSH Respirator Decision Logic, and the manufacturer for additional guidance on respiratory protection selection. Use a NIOSH/ MSHA-approved positive-pressure supplied-air respirator if there is a potential for uncontrolled release, exposure levels are not known, in oxygen-deficient atmospheres, or any other circumstance where an air-purifying respirator may not provide adequate protection.

Hygiene measures : Emergency eye wash capability should be available in the vicinity of any potential splash exposure. Use good personal hygiene practices. Avoid repeated and/or prolonged skin exposure. Wash hands before eating, drinking, smoking, or using toilet facilities. DO NOT use gasoline, kerosene, solvents, or harsh abrasive skin cleaners to clean skin. Waterless hand cleaners are effective. Promptly remove contaminated clothing and launder before reuse. Consider the need to discard contaminated leather shoes and gloves. Consider disposal of contaminated clothing rather than laundering to prevent the formation of flammable vapors which could ignite via washer or dryer.

SECTION 9. PHYSICAL AND CHEMICAL PROPERTIES

Appearance : Typical is a thick, dark yellow to brown or greenish black liquid

Odor Petroleum asphalt odor. Hydrogen sulfide (H2S) has a characteristic rotten egg odor with an odor threshold as low as 10 parts per billion or even less. However, this odor should not be used as a warning property because H2S can deaden the sense of smell. H2S concentrations can be measured with an H2S meter or colorimetric indicating tubes.

Odor threshold Odor threshold varies with the composition of the crude oil

pH Not applicable

Melting point/freezing point	-30° to 30°C has been reported as a pour point
Initial boiling point & range	Distillation is typically not performed above 300°C at atmospheric pressure
Flash point	-7 to 75°C
Evaporation rate:	Higher initially and declines if lighter components evaporate
Flammability (solid, gas)	Flammable gas or vapors released by liquid
Upper explosive limit	Varies with composition but typical is approximately 7%
Lower explosive limit	Varies with composition but typical is approximately 0.7%
Vapor pressure	6 to 45 kPa
Vapor density (air = 1)	No data available
Relative density (water = 1)	0.8 to 1.0 g/mL is typical at 15°C
Solubility (in water)	1 to 2% by weight is maximum reported for soluble components of crude oil
Partition coefficient (n-octanol/water)	2 to > 6 as log Pow
Auto-ignition temperature	Varies with composition
Decomposition temperature	Will evaporate or boil and possibly ignite before decomposition occurs.
Kinematic viscosity	5 to > 1300 mm^2/s at 38°C

SECTION 10. STABILITY AND REACTIVITY

Reactivity	Vapors may form explosive mixture with air. Hazardous polymerization does not occur.
Chemical stability	Stable under normal conditions.
Possibility of hazardous reactions	Can react with strong oxidizing agents, peroxides, acids and alkalies.
Conditions to avoid	Avoid high temperatures, open flames, sparks, welding, smoking and other ignition sources. Avoid static charge accumulation and discharge (see Section 7).
Hazardous decomposition products	Ignition and burning can release carbon monoxide, carbon dioxide, non-combusted hydrocarbons (smoke) and sulfur dioxide.

SECTION 11. TOXICOLOGICAL INFORMATION

Inhalation	May cause respiratory tract irritation. Central nervous system (brain) effects may include headache, dizziness, loss of balance and coordination, unconsciousness, coma, respiratory failure, and death. Irritating and toxic hydrogen sulfide gas may be present. Greater than 15 - 20 ppm continuous exposure can cause mucous membrane and respiratory tract irritation. 50 - 500 ppm can cause headache, nausea, and dizziness. Continued exposure at these levels can lead to loss of

reasoning and balance, difficulty in breathing, fluid in the lungs, and possible loss of consciousness. Greater than 500 ppm can cause rapid unconsciousness due to respiratory paralysis and death by suffocation unless the victim is removed from exposure and successfully resuscitated. Greater than 1000 ppm can cause immediate unconsciousness and death if not promptly revived. After-effects from overexposure are not anticipated except what would be expected if the victim was without oxygen for more than 3 to 5 minutes (asphyxiation). The "rotten egg" odor of hydrogen sulfide is not a reliable indicator for warning of exposure, since olfactory fatigue (loss of smell) readily occurs, especially at concentrations above 50 ppm. At high concentrations, the victim may not even recognize the odor before becoming unconscious.

Ingestion

Aspiration hazard if liquid is inhaled into lungs, particularly from vomiting after ingestion. Aspiration may result in chemical pneumonia, severe lung damage, respiratory failure and even death. Ingestion may cause gastrointestinal disturbances, including irritation, nausea, vomiting and diarrhea, and central nervous (brain) effects similar to alcohol intoxication. In severe cases, tremors, convulsions, loss of consciousness, coma, respiratory arrest and death may occur.

Skin irritation

Practically non-toxic if absorbed following acute (single) exposure. May cause skin irritation with prolonged or repeated contact. Liquid may be absorbed through the skin in toxic amounts if large areas of skin are repeatedly exposed. Rare, precancerous warts on the forearms, backs of hands and scrotum have been reported from prolonged or repeated skin contact.

Eye irritation

Irritating to eyes.

Chronic exposure

This material contains polynuclear aromatic hydrocarbons (PNAs), some of which are animal carcinogens. Similar products produced skin cancer and systemic toxicity in laboratory animals following repeated applications. The significance of these results to human exposures has not been determined - see Section 11 Toxicological Information. Contains benzene, which can cause blood disease, including anemia and leukemia. Suspect reproductive hazard - contains material which may injure unborn child.

Target organs

Skin, Eyes, Central nervous system, Respiratory system, Kidney, Liver

Component :

Petroleum; Crude oil	8002-05-9	Acute oral toxicity: LD50 rat Dose: 5,001 mg/kg Acute dermal toxicity: LD50 rabbit Dose: 2,001 mg/kg Skin irritation: Result: Mild skin irritation Eye irritation: Result: Mild eye irritation Carcinogenicity: N11.00418605
Toluene	108-88-3	Acute oral toxicity: LD50 rat Dose: 636 mg/kg Acute dermal toxicity: LD50 rabbit Dose: 12,124 mg/kg Acute inhalation toxicity: LC50 rat Dose: 49 mg/l Exposure time: 4 h Skin irritation: Classification: Irritating to skin. Result: Mild skin irritation

		Prolonged skin contact may defat the skin and produce dermatitis. Eye irritation: Classification: Irritating to eyes. Result: Mild eye irritation
Xylene	1330-20-7	Acute oral toxicity: LD50 rat Dose: 2,840 mg/kg Acute dermal toxicity: LD50 rabbit Dose: ca. 4,500 mg/kg Acute inhalation toxicity: LC50 rat Dose: 6,350 mg/l Exposure time: 4 h Skin irritation: Classification: Irritating to skin. Result: Mild skin irritation Repeated or prolonged exposure may cause skin irritation and dermatitis, due to degreasing properties of the product. Eye irritation: Classification: Irritating to eyes. Result: Mild eye irritation
Naphthalene	91-20-3	Acute oral toxicity: LD50 rat Dose: 2,001 mg/kg Acute dermal toxicity: LD50 rat Dose: 2,501 mg/kg Acute inhalation toxicity: LC50 rat Dose: 101 mg/l Exposure time: 4 h Skin irritation: Classification: Irritating to skin. Result: Mild skin irritation Eye irritation: Classification: Irritating to eyes. Result: Mild eye irritation Carcinogenicity: N11.00422130
Benzene	71-43-2	Acute oral toxicity: LD50 rat Dose: 930 mg/kg Acute inhalation toxicity: LC50 rat Dose: 44 mg/l Exposure time: 4 h Skin irritation: Classification: Irritating to skin. Result: Mild skin irritation Repeated or prolonged exposure may cause skin irritation and dermatitis, due to degreasing properties of the product. Eye irritation: Classification: Irritating to eyes. Result: Risk of serious damage to eyes.
Pentane	109-66-0	Acute oral toxicity: LD50 rat Dose: 2,001 mg/kg Acute inhalation toxicity: LC50 rat Dose: 364 mg/l Exposure time: 4 h Skin irritation: Repeated or prolonged exposure may cause skin irritation and dermatitis, due to degreasing properties of the product. Eye irritation: Classification: Irritating to eyes. Result: Mild eye irritation

Cyclohexane	110-82-7	Acute dermal toxicity: LD50 rabbit Dose: 2,001 mg/kg Acute inhalation toxicity: LC50 rat Dose: 14 mg/l Exposure time: 4 h Skin irritation: Classification: Irritating to skin. Result: Skin irritation Eye irritation: Classification: Irritating to eyes. Result: Mild eye irritation
Ethylbenzene	100-41-4	Acute oral toxicity: LD50 rat Dose: 3,500 mg/kg Acute dermal toxicity: LD50 rabbit Dose: 15,500 mg/kg Acute inhalation toxicity: LC50 rat Dose: 18 mg/l Exposure time: 4 h Skin irritation: Classification: Irritating to skin. Result: Mild skin irritation Eye irritation: Classification: Irritating to eyes. Result: Risk of serious damage to eyes.
Heptane [and isomers]	142-82-5	Acute oral toxicity: LD50 rat Dose: 15,001 mg/kg Acute inhalation toxicity: LC50 rat Dose: 103 g/m3 Exposure time: 4 h Skin irritation: Classification: Irritating to skin. Result: Skin irritation Repeated or prolonged exposure may cause skin irritation and dermatitis, due to degreasing properties of the product. Eye irritation: Classification: Irritating to eyes. Result: Mild eye irritation
N-hexane	110-54-3	Acute oral toxicity: LD50 rat Dose: 25,000 mg/kg Acute dermal toxicity: LD50 rabbit Dose: 2,001 mg/kg Acute inhalation toxicity: LC50 rat Dose: 171.6 mg/l Exposure time: 4 h Skin irritation: Classification: Irritating to skin. Result: Skin irritation Eye irritation: Classification: Irritating to eyes. Result: Mild eye irritation Teratogenicity: N11.00418960

Carcinogenicity

NTP	Naphthalene (CAS-No.: 91-20-3) Benzene (CAS-No.: 71-43-2)
IARC	Gasoline, natural; Low boiling point naphtha (CAS-No.: 8006-61-9) Naphthalene (CAS-No.: 91-20-3) Benzene (CAS-No.: 71-43-2) Ethylbenzene (CAS-No.: 100-41-4)
OSHA	Benzene (CAS-No.: 71-43-2)
CA Prop 65	WARNING! This product contains a chemical known to the State of California to cause birth defects or other reproductive harm. Toluene (CAS-No.: 108-88-3) Benzene (CAS-No.: 71-43-2)

SECTION 12. ECOLOGICAL INFORMATION

Additional ecological information : Keep out of sewers, drainage areas, and waterways. Report spills and releases, as applicable, under Federal and State regulations.

Component:

Toluene	108-88-3	Toxicity to fish: LC50 Species: Carassius auratus (goldfish) Dose: 13 mg/l Exposure time: 96 h Acute and prolonged toxicity for aquatic invertebrates: EC50 Species: Daphnia magna (Water flea) Dose: 11.5 mg/l Exposure time: 48 h Toxicity to algae: IC50 Species: Selenastrum capricornutum (green algae) Dose: 12 mg/l Exposure time: 72 h

SECTION 13. DISPOSAL CONSIDERATIONS

Disposal : Consult federal, state and local waste regulations to determine appropriate waste characterization of material and allowable disposal methods.

SECTION 14. TRANSPORT INFORMATION

CFR

Proper shipping name	:	PETROLEUM CRUDE OIL
UN-No.	:	1267
Class	:	3
Packing group	:	II

TDG

Proper shipping name	:	PETROLEUM CRUDE OIL
UN-No.	:	UN1267
Class	:	3
Packing group	:	II

IATA Cargo Transport

UN UN-No.	:	UN1267
Description of the goods	:	PETROLEUM CRUDE OIL
Class	:	3
Packaging group	:	II
ICAO-Labels	:	3
Packing instruction (cargo aircraft)	:	364
Packing instruction (cargo aircraft)	:	Y341

IATA Passenger Transport

UN UN-No.	:	UN1267
Description of the goods	:	PETROLEUM CRUDE OIL
Class	:	3
Packaging group	:	II
ICAO-Labels	:	3
Packing instruction (passenger aircraft)	:	353
Packing instruction (passenger aircraft)	:	Y341

IMDG-Code

UN-No.	:	UN 1267
Description of the goods	:	PETROLEUM CRUDE OIL
Class	:	3
Packaging group	:	II
IMDG-Labels	:	3
EmS Number	:	F-E S-E
Marine pollutant	:	No

SECTION 15. REGULATORY INFORMATION

TSCA Status	:	On TSCA Inventory
DSL Status	:	All components of this product are on the Canadian DSL list.
SARA 311/312 Hazards	:	Acute Health Hazard Chronic Health Hazard

CERCLA SECTION 103 and SARA SECTION 304 (RELEASE TO THE ENVIROMENT)

The CERCLA definition of hazardous substances contains a “petroleum exclusion” clause which exempts crude oil. Fractions of crude oil, and products (both finished and intermediate) from the crude oil refining process and any indigenous components of such from the CERCLA Section 103 reporting requirements. However, other federal reporting requirements, including SARA Section 304, as well as the Clean Water Act may still apply.

CERCLA Reportable Quantity : 118 lbs

SARA III — US. EPA Emergency Planning and Community Right-To-Know Act (EPCRA) SARA Title III Section 313 Toxic Chemicals (40 CFR 372.65) - Supplier Notification Required

Components	CAS-No.
Xylene	1330-20-7
Ethylbenzene	100-41-4
Toluene	108-88-3
Benzene	71-43-2

SARA III — US. EPA Emergency Planning and Community Right-To-Know Act (EPCRA) SARA Title III Section 302 Extremely Hazardous Substance (40 CFR355, Appendix A)

Components	CAS-No.

PENN RTK — US. Pennsylvania Worker and Community Right-to-Know Law (34 Pa. Code Chap. 301-323)

Components	CAS-No.
Benzene	71-43-2
Toluene	108-88-3
Ethylbenzene	100-41-4
Xylene	1330-20-7
Petroleum; Crude oil	8002-05-9

MASS RTK — US. Massachusetts Commonwealth's Right-to-Know Law (Appendix A to 105 Code of Massachusetts Regulations Section 670.000)

Components	CAS-No.
Benzene	71-43-2
Toluene	108-88-3
Ethylbenzene	100-41-4
Xylene	1330-20-7
Petroleum; Crude oil	8002-05-9

NJ RTK — US. New Jersey Worker and Community Right-to-Know Act (New Jersey Statute Annotated Section 34:5A-5)

Components	CAS-No.
Benzene	71-43-2
Toluene	108-88-3
Ethylbenzene	100-41-4
Xylene	1330-20-7
Petroleum; Crude oil	8002-05-9

California Prop. 65 : WARNING! This product contains a chemical known in the State of California to cause cancer.

Ethylbenzene 100-41-4

Benzene	71-43-2

WARNING! This product contains a chemical known to the State of California to cause birth defects or other reproductive harm.

Toluene	108-88-3
Benzene	71-43-2

SECTION 16. OTHER INFORMATION

Further information

The information provided in this Safety Data Sheet is correct to the best of our knowledge, information and belief at the date of its publication. The information given is designed only as guidance for safe handling, use, processing, storage, transportation, disposal and release and is not to be considered a warranty or quality specification. The information relates only to the specific material designated and may not be valid for such material used in combination with any other materials or in any process, unless specified in the text.

Revision Date : 02/02/2013

SIEMENS

Water Technologies

Material Safety Data Sheet

SECTION 1 – CHEMICAL PRODUCT AND COMPANY INFORMATION

Product Type: Activated Carbon
Product Names: AquaCarb ® Series (except the NoRise family), VOCarb ® Series (except the 410 family and the HgFree family), AC Series, VC Series, BevCarb ® Series, and UltraCarb ® Series

Manufacturer's Name: Siemens Water Technologies Corp.
Address: 14250 Gannet Street, La Mirada, CA 90638
Product/Technical Information Phone Number: (714) 228 - 8800
Medical/Handling Emergency Phone Number: CHEMTREC (800) 424–9300
24 hours / day everyday
Transportation Emergency Phone Number: CHEMTREC (800) 424-9300
24 hours / day everyday
Issue Date/Revision Number: 18 March 2010 / Rev 3

SECTION 2– COMPOSITION INFORMATION

Chemical Name	Percent by Weight	CAS#
Activated Carbon	100	7440-44-0

SECTION 3– HAZARDS IDENTIFICATION

Appearance & Odor: black particles without taste or odor

Emergency Overview:
Activated carbon particles on the floor make the floor slippery. Particles may irritate the eyes and cause mechanical injury.
Warning: Wet activated carbon depletes oxygen from the air and therefore dangerously low levels of oxygen may be encountered in enclosed spaces. Whenever workers enter a vessel containing activated carbon, the vessel's oxygen content should be determined and work procedures for potentially low oxygen areas should be followed.

Fire & Explosion Hazards: The adsorption of organic compounds onto activated carbon generates heat. In rare instances, adsorbed compounds may also react on the carbon surface to generate additional heat. If these heat sources are not properly dissipated, particularly in vapor-phase carbon applications, the carbon bed temperature may rise to the point where the carbon can ignite, leading to a fire or other hazardous condition.

Primary Route(s) of Exposure: Eye contact, skin contact, and inhalation.

Inhalation – Acute Effects: May be irritating to the respiratory tract and cause coughing or sneezing.

Skin Contact – Acute Effects: May cause slight skin irritation.

Eye Contact – Acute Effects: May irritate eyes or cause mechanical injury.

Ingestion – Acute Effects: May irritate the gastrointestinal tract.

SECTION 4– FIRST AID MEASURES

Inhalation First Aid: Remove affected person to fresh air. Give artificial respiration ONLY if breathing has stopped and give CPR ONLY if there is no breathing and no pulse. Obtain medical attention immediately.

Skin Contact First Aid: Wash skin for 5 minutes with flowing water and soap. Clothing should be washed before reuse. Obtain medical assistance if irritation develops.

Eye Contact First Aid: Immediately irrigate eyes with flowing water continuously for 15 minutes while holding eyelids open. Contacts should be removed before or during flushing. Get medical assistance if irritation develops.

Ingestion First Aid: Do not induce vomiting. Obtain medical attention immediately.

Medical Conditions Aggravated: Respiratory ailments may be aggravated by exposure to dusts of this material.

Note to Physician: No specific antidote. Treat symptomatically.

SECTION 5– FIRE FIGHTING MEASURES

Flash Point/Method: Nonflammable **Auto Ignition Temperature**: 840℃ (1,710℉)

Upper/Lower Explosion Limits: Not applicable.

Extinguishing Media: Water spray, carbon dioxide, foam or dry chemical

Fire Fighting Procedures: In the event of a fire, wear full protective clothing and NIOSH approved self-contained breathing apparatus with full face piece, operated in positive pressure mode.

Unusual Fire & Explosion Hazards: Avoid producing suspensions of dust during handling and avoid exposure of suspensions to sources of ignition. Suspensions of – 40 mesh particles may explode if exposed to strong ignition sources.

Hazardous Products of Decomposition and/or Combustion: Carbon oxides.

NFPA Ratings:

HEALTH- 1 FLAMMABILITY- 0 REACTIVITY- 0

SECTION 6– ACCIDENTAL RELEASE MEASURES

Spill/Leak Procedures: Clean up spills in a manner that does not disperse dust into the air.

Cleanup: Handle in accordance with good industrial hygiene and safety practices. These practices include avoiding unnecessary exposure and removal of a material from eyes, skin, and clothing.

Regulatory Requirements: Spent (used) carbon should be disposed of in accordance with applicable laws. All disposal methods must be in compliance with all Federal, State, Local and Provincial laws and regulations. Regulations may vary in different locations. Waste characterizations and compliance with applicable laws are the responsibility solely of the waste generator.

Disposal: Dispose of virgin (unused) carbon (waste or spillage) in a facility permitted for non-hazardous wastes. Spent (used) carbon should be disposed of in accordance with applicable laws. Do not reuse empty bags. Dispose of in facility permitted for non-hazardous wastes. DO NOT DUMP INTO ANY SEWERS, ON THE GROUND OR INTO ANY BODY OF WATER. All disposal methods must be in compliance with all Federal, State, Local and Provincial laws and regulations. Regulations may vary in different locations. Waste characterizations and compliance with applicable laws are the responsibility solely of the waste generator.

SECTION 7– HANDLING AND STORAGE

Handling: Avoid dispersion into air. Keep containers dry and closed. Follow good handling and housekeeping practices to minimize spills, generation of airborne dusts, and accumulation of dusts on exposed surfaces. Use with adequate exhaust ventilation to draw dust away from workers' breathing zones. Prevent or minimize exposures to dusts by using appropriate respirators, gloves and eye protection. Wash exposed skin areas thoroughly with soap and water. Use caution when pouring, using pneumatic transport, swirling, etc. as this material can become electrostatically charged and present a dust explosion hazard.

Storage: Avoid spilling material so as to avoid creating a dust suspension. Store at ambient atmospheric conditions. Product should be stored in a closed dry container. Maintain good housekeeping procedures. Store away from strong oxidizers such as ozone, liquid oxygen, chlorine, permanganate, etc.

Empty Containers: Containers of this material may be hazardous when empty since they retain product residues (dust, solids); observe all warnings and precautions listed for the product.

SECTION 8–PERSONAL PROTECTION/ EXPOSURE CONTROL

Respiratory Protection: If use conditions generate dust levels above the TLV / PEL, wear a NIOSH-approved particulate respirator or a NIOSH-approved cartridge respirator fitted with dust filters.

Skin Protection: Wear appropriate dust resistant clothing and gloves.

Eye Protection: Safety glasses with side shields. If eye contact or dusty conditions are likely, wear dust tight goggles.

Ventilation Protection: Provide ventilation if necessary to minimize exposure. General ventilation is usually acceptable, but local mechanical exhaust ventilation is preferred at sources of air contamination such as open process equipment.

Other Protection: Safety showers, with quick opening valves which stay open, and eye wash fountains, or other means of washing the eyes with a gentle flow of cool to tepid tap water,

should be readily available in all areas where this material is handled or stored. Water should be supplied through insulated and heat-traced lines to prevent freeze-ups in cold weather.

Exposure Limits:
Exposure limits have not been established for this material. However, the following are widely accepted limits for exposure to otherwise nontoxic particulates:

	OSHAPEL, 8 hr TWA mg/m^3	ACGIH TLV, 8 hr TWA mg/m^3
Particulates Not Otherwise Regulated (PNOR)	15 (total) 5 (respirable)	- - - - - -
Particulates Not Otherwise Classified (PNOC)	- - - - - -	10 (inhalable) 3 (respirable)

SECTION 9– PHYSICAL AND CHEMICAL PROPERTIES

Boiling Point: Not applicable **Melting Point**: Not applicable

Specific Gravity: 1.8 – 2.1 **Solubility in Water**: Insoluble

Volatile Percentage: Nil **pH**: Not determined

SECTION 10– STABILITY AND REACTIVITY

Stability: This product is considered stable under the specified conditions of storage, shipment and use.

Incompatibilities: Contact with strong oxidizers such as ozone, liquid oxygen, chlorine, permanganate, etc. may result in rapid combustion. Avoid contact with strong acids.

Hazardous Polymerization: Will not occur.

Hazardous Decomposition Products: Hazardous decomposition will produce carbon oxides.

Conditions to Avoid: Store away from strong oxidizers such as ozone, liquid oxygen, chlorine, permanganate, etc. Moist air will reduce the operating life.

SECTION 11 – TOXICOLOGICAL INFORMATION

Inhalation – Acute: Inhalation of carbon dust is mildly irritating to the lungs and can immediately give rise to an increased mucociliary transport and airway resistance mediated by the vagus.

Inhalation LC50 (Rat)> 64.4 mg / l.

Inhalation – Chronic: There are no known chronic inhalation effects.

Skin Contact – Acute: Skin contact is expected to be slightly irritating. The primary skin irritation index (rabbit) is 0.

Skin Contact – Chronic: There are no known chronic dermal effects.

Eye Contact – Acute: Eye contact can cause conjunctivitis, epithelial hyperplasia of the cornea, as well as eczematous inflammation of the eyelids.

Ingestion – Acute: Activated carbon is practically nontoxic. The probable oral lethal dose (human) is greater than 1 5g/kg; more than one quart (2.2 lbs) for a 150 lb person.

Ingestion – Chronic: There are no known chronic ingestion effects.

Carcinogen icity/Mutagenicity: There are no known carcinogenic/mutagenic effects.

Reproductive Effects: There are no known reproductive effects.

Neurotoxicity: There are no known neurotoxic effects.

Other Effects: No other effects of carbon are known.

Target Organs: Target organs include the respiratory system and the cardiovascular system.

SECTION 12– ECOLOGICAL INFORMATION

The material, in its original state, is not harmful to the environment.

SECTION 13– DISPOSAL CONSIDERATIONS

Spill/Leak Procedures: Clean spills in a manner that does not disperse dust into the air, preferably a wet-down procedure or vacuum.

Cleanup: If material is not contaminated, spilled media can be re-bagged. Material that cannot be used or chemically reprocessed and empty containers should be disposed of in accordance with all applicable regulations. Product containers should be thoroughly emptied before disposal.

Regulatory Requirements: Generators of waste material are required to evaluate all waste for compliance with RCRA and any local disposal procedures and regulations. NOTE: State and local regulations may be more stringent than federal regulations.

Disposal: Material that cannot be used or chemically reprocessed and empty containers should be disposed of in accordance with all applicable regulations. Product containers should be thoroughly emptied before disposal. Warning: Wet activated carbon depletes oxygen from the air and therefore dangerously low levels of oxygen may be encountered. Whenever workers enter a vessel containing activated carbon, the vessel's oxygen content should be determined and work procedures for potentially low oxygen areas should be followed.

SECTION 14– TRANSPORTATION INFORMATION

Domestic Transportation: This material is not a hazardous material for domestic transportation purposes.

International Transportation: This material is not a dangerous good for international transportation purposes.

SECTION 15– REGULATORY INFORMATION

OSHA Hazard Communication Standard: Irritant
CERCLA Section 103: No RQ: None
SARA Section 302: No SARA Section 304: No SARA Section 313: No SARA Hazard Categories, Sections 311/312:

- Acute: Yes
- Chronic: No
- Fire: No
- Reactive: No
- Sudden Pressure Release: No

OSHA Process Safety Standard: No
California Proposition 65: Not listed
TSCA: The ingredients of this product are on the TSCA Inventory List.

SECTION 16–OTHER INFORMATION

Disclaimer: The information contained herein is based on data considered accurate. However, no warranty is expressed or implied regarding the accuracy of these data or the results to be obtained from the user thereof. It is the buyer's responsibility to ensure that its activities comply with federal, state, provincial and local laws.

Revision Indicator: 18 March 2010, Revised Section 15

Material Safety Data Sheet

1. CHEMICAL PRODUCT AND COMPANY INFORMATION

Chemical Product Name	Sodium Chloride (Salt), Compressed
Chemical Family	Alkali Metal/Halide
Chemical Name	Sodium Chloride
Formula	NaCl
Molecular Weight	58.44
Commercial Name	Diamond Crystal® Bright & Soft™ Salt Pellets

Manufacturer
Cargill Incorporated
Salt Division
P. O. Box 5621
Minneapolis, MN 55440
(800) 377-1017

Emergency Telephone Numbers
CHEMTREC (800) 424-9300

2. COMPOSITION/INFORMATION ON INGREDIENTS

Description
Compressed white pellets.

Ingredient Name **CAS Number**	**Exposure Limits**	**Concentration (%)**
Sodium Chloride 7647-14-5		99.97%
Sodium Hexametaphosphate 10124-56-8		0.03%

3. HAZARDS INDENTIFICATION

EMERGENCY OVERVIEW

HMIS Health: 1, Flammability: 0, Reactivity: 0, Protective Equipment: A

Potential Health Effects

Route(s) Of Entry: Ingestion, skin/eye contact, inhalation.

Human Effects and Symptoms of Overexposure:

Acute Inhalation: Irritation of the respiratory tract.

Chronic Inhalation: No applicable information found for chronic systemic effects

Acute Skin Contact: Large amounts can cause irritation and if applied to damaged skin, absorption can occur with effects similar to those via ingestion.

Chronic Skin Contact: No applicable information found for chronic systemic effects.

Acute Eye Contact: Irritation with burning and tearing (salt concentrations greater than the normal saline present).

Chronic Eye Contact: No applicable information found for chronic systemic effects.

Acute Ingestion: Intake of large amounts has generally occurred for deliberate reasons: suicide, absorption, and to induce vomiting. The following effects were observed; nausea and vomiting, diarrhea, cramps, restlessness, irritability, dehydration, water retention, nose bleed, gastrointestinal tract damage, fever, sweating, sunken eyes, high blood pressure, muscle weakness, dry mouth and nose, shock, cerebral (fluid on brain) or pulmonary edema (fluid in lungs), blood cell shrinkage, and brain damage (due to dehydration of brain cells). Death is generally due to cardiovascular collapse or CNS damage. Less than a few grams would not be harmful. For larger quantities, drink large amounts of water or milk.

Chronic Ingestion: No applicable information found for chronic systemic effects.

Carcinogenicity

NTP: Not listed as a carcinogen or mutagen.
IARC: Not listed as a carcinogen or mutagen.
OSHA: Not listed as a carcinogen or mutagen.

Medical Conditions Aggravated by Exposure: In some cases of confirmed hypertension, ingestion may result in elevated blood pressure.

4. FIRST AID MEASURES

First Aid For Eyes: For eye contact, flush with water immediately, lifting eyelids occasionally.

First Aid For Skin: Remove clothing from affected area. Wash skin thoroughly. Rinse carefully.

First Aid For Inhalation: If person breathes large quantities, remove to fresh air at once. If breathing stops, apply artificial respiration immediately.

First Aid For Ingestion: Less than a few grams would not be harmful. For larger quantities, drink large amounts of water or milk.

5. FIRE AND MEASURES

Flash Point: N/A

Extinguishing Media: N/A. This product is nonflammable.

Special Fire Fighting Procedures: N/A.

6. ACCIDENTAL RELEASE MEASURES

Spill or Leak Procedures: Contain spills to prevent contamination of water supply or sanitary sewer system. Vacuum or sweep into containers for proper disposal.

7. HANDLING AND STORAGE

Storage Temperature (min./max.): Avoid humid or wet conditions as product will cake and become hard.

Special Sensitivity: Avoid contact with strong acids.

Handling and Storage Precautions: Becomes hygroscopic at 70% Relative Humidity

8. EXPOSURE CONTROLS/PERSONAL PROTECTION

Eye Protection Requirements: Eyeglasses or goggles should be worn in dusty areas.

Skin Protection Requirements: Protective clothing may be worn in dusty areas, but is generally not required.

Respiratory/Ventilation Requirements: NIOSH/MSHA approved respirator for particulates.

Exposure Limits: Not listed.

9. PHYSICAL AND CHEMICAL PROPERTIES

Physical Form: White crystalline solid with slight halogen odor.

Color: White crystalline solid

Odor: Halogen odor

Boiling Point (760mm Hg) (^{o}C): 760 mm Hg. 1465 degrees C.

Melt Point/Freeze Point (^{o}C): 801 degrees C.

PH: 6.7 - 7.3

Solubility In Water (g/cc, %): 26.4%

Specific Gravity ($H_2$0=1): 2.16 (H_2O)

Bulk Density: 53-83 Lbs/Ft^3

% Volatile By Weight: N/A

Vapor Pressure (mm Hg/747°C): = 2.4

Vapor Density (Air=1): (Air=1) N/A

10. REACTIVITY

Stability: Stable

Incompatibilities: Avoid contact with strong acids. Becomes corrosive to metals when wet.

Decomposition Products: May evolve chlorine gas when in contact with strong acids.

11. TOXICOLOGICAL INFORMATION

Description: Not Listed

12. ECOLOGICAL INFORMATION

Ecotoxicity: Not Listed.

Environmental Degradation: Not Listed.

13. DISPOSAL CONSIDERATIONS

Waste Disposal Method: Follow applicable Federal, state and local regulations.

14. TRANSPORTATION INFORMATION

D.O.T. Shipping Name: Not Listed

Technical Shipping Name: Not Listed

D.O.T Hazard Class: Not Listed

U.N./N.A. Number: Not Listed

Product Rq (lbs.): N/A

D.O.T. Label: Not Listed

D.O.T. Placard: N/A

Freight Class Bulk: N/A

Freight Class Package: N/A

Product Label: N/A

15. REGULATORY INFORMATION

OSHA Status: Not Listed

TSCA Status: Listed as non hazardous.

Cercla reportable Quantity
SARA Title III
Section 302 Extremely
Hazardous Substances: Not Listed

Section 311/312
Hazard categories: Not Listed

Section 313
Toxic Chemicals: Not Listed

RCRA Status: Not Listed

HMIS: 1 0 0 A

State Regulatory Information

Component Name /CAS Number	Concentration	State-Code
N/A		

16. OTHER INFORMATION

Reason For Issue: Regulatory Compliance
Prepared By: Steve Karl
Approved By: Sarah Hubert
Title: Director-Quality Administration
Approval Date: November 2012
Supersedes Date:
MSDS Number: ND14

Disclaimer: All statements, technical information and recommendations contained herein are, the best of our knowledge, reliable and accurate; however no warranty, either expressed or implied is made with respect thereto, nor will any liability be assumed for damages resultant from the use of the material described.

It is the responsibility of the user to comply with all applicable federal, state and local laws and regulations. It is also the responsibility of the user to maintain a safe workplace. The user should consider the health hazards and safety information provided herein as a guide and should take the necessary steps to instruct employees and to develop work practice procedures to ensure a safe work environment.

This information is not intended as a license to operate under, or a recommendation to practice or infringe upon any patent of this Company or others covering any process, composition of matter or use.

Material Safety Data Sheet

IDENTITY **CTI - 220**	Other Common Names: Cleaning Compound

HAZARD RATING SCALE: 4=Extreme; 3=High; 2=Moderate; 1=Insignificant
Toxicity = 1 Fire = 2 Reactivity = 0

Section I

Distributor's name	Emergency Telephone Number:	800-535-5053	
Corrosion Technology, Inc.	Telephone Number for Information:	610-429-1450	
125 Willowbrook Lane	Fax Number:	610-429-1473	
West Chester, PA 19382	Prepared By: James Kent	Date Prepared: FEB 2011	

Section II—Hazardous Ingredients/Identity Information

Hazardous Components (Specific Chemical Identity, Common Name(s))	%	CAS No.	PEL/TLV
Aromatic hydrocarbon	>35	64742-95-6	not established
Naphthalene	<4	91-20-3	TWA of 10 ppm
1,2,4 Trimethylbenzene	<1	95-63-6	TWA of 25 ppm
Potassium Hydroxide	<5	1310-58-3	PEL/TLV 2mg/mg3

Section III—Physical/Chemical Characteristics

Boiling Point (o F)	220 to 400	Specific Gravity (H_20 = 1)	.99
Vapor Pressure (mm Hg)	ND	Melting Point	N/A
Vapor Density (AIR = 1)	N/A	% Volatile	80%

Solubility in Water: emulsifies

Appearance and Odor: clear liquid with aromatic odor

Section IV—Fire and Explosion Hazard Data

Flash Point (Method Used)	160° F TCC	Flammable Limits	LEL ND	UEL ND

Extinguishing Media: Dry chemical, carbon dioxide, halon, foam or water spray is recommended.

Special Fire Fighting Procedures

Wear appropriate protective equipment including respiratory protection as conditions warrant. Water spray may be useful in minimizing vapors and cooling containers exposed to heat and flame.

Unusual Fire and Explosion Hazards

This material is combustible and may be ignited by sparks, flame or other sources of ignition.

Section V—Reactivity Data

Stability	Unstable	☐	Conditions to Avoid N/A
	Stable	☒	

Incompatibility *(Materials to Avoid)* Strong acids, bases or oxidizing agents.

Hazardous Decomposition or Byproducts Thermal decomposition may yield carbon monixide and/or carbon dioxide.

Hazardous Polymerization	May Occur	☐	Conditions to Avoid N/A
	Will Not Occur	☒	

Section VI—Health Hazard Data

Acute: Skin & Eye Irritant | Chronic: None Known

Signs and Symptoms of Exposure

INHALATION: Excessive concentration of vapors or mists may cause irritation of nose & throat and signs of nervous system depression (e.g. drowsiness, dizziness, fatigue)

SKIN: Skin irritant; prolonged or repeated contact may cause redness, burning , cracking of the skin

EYES: Eye irritant; contact with the liquid or exposure to vapors or mists may cause burning, tearing, and redness.

INGESTION: May cause irritation of digestive tract, and signs of nervous system depression.

Medical Conditions
Generally Aggravated by Exposure

Respiratory symptoms associated with pre-existing lung disorders (asthma- like conditions) may be aggravated by exposure.

Listed as potential Carcinogen? IARC? No | National Toxicology Program? No

Emergency and First Aid Procedures

INHALATION: If affected, remove person to fresh air. Seek medical assistance if irritation persists.

SKIN: Remove contaminated clothing and flush area with soap & water. Seek medical attention if irritation occurs.

EYES: If irritation from exposure develops, move victim away from exposure into fresh air. For direct contact, flush with water for 15 minutes. Seek medical attention.

INGESTION: Aspiration hazard: Do not induce vomiting or give anything by mouth because this material can enter the lungs and cause severe lung damage. If victim is drowsy or unconscious, place on the left side with the head down. If possible, do not leave victim unattended. Seek medical attention immediately.

Section VII—Precautions for Safe Handling and Use

Steps to Be Taken in Case Material Is Released or Spilled

Flush with water into retaining area or container. Avoid exposure to sparks, fire or hot metal surfaces. Small spills can be absorbed on suitable oil absorbent. Wear appropriate protective equipment. Do not allow to enter sewers or streams.

Waste Disposal Method Dispose of in accordance with all local, state and federal regulations.

Precautions to Be Taken In Handling and Storing Keep away from heat, sparks and open flames. Use with adequate ventilation. Keep out of reach of children. Keep containers tightly closed when not in use. Store in area with good ventilation. Wash thoroughly after use. "Empty containers" contain residue and can be dangerous. Do not pressurize, cut, weld, braze, solder, drill, grind or expose such containers to heat, flame, or sparks.

Section VIII—Control Measures

Respiratory Protection *(Specify Type)*

Self contained breathing apparatus for concentrations above exposure limits.

Ventilation	Local Exhaust ☐	Special
	Mechanical *(General)* ☐	Other If current ventilation practices are not adequate to maintain airborne concentrations below the established exposure limits, additional ventilation or exhaust systems may be required.

Protective Gloves rubber or neoprene | Eye Protection goggles and /or face shield

Other Protective Clothing or Equipment rubber apron, eye wash and safety shower.

Work/Hygienic Practices

N/A = Not Applicable **ND = Not Determined** **< = Less Than** **> = Greater Than**

The information provided in this Material Safety Data Sheet has been obtained from sources believed to be reliable and is offered in good faith as accurate, but without guarantee. Conditions of use and suitability of the product for particular uses are beyond our control. All risks of use of the product are therefore assumed by the user and we expressly disclaim all warranties of every kind and nature, including warranties of merchantability and fitness for a particular purpose in respect to the use or suitability of the product.

Material Safety Data Sheet
Diesel Low Sulfur (LSD) and Ultra Low Sulfur Diesel (ULSD)

NFPA:

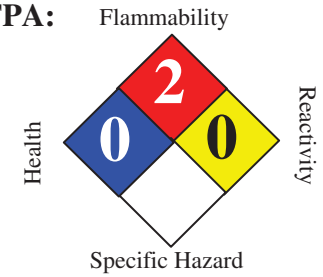

HMIS III:

HEALTH	1
FLAMMABILITY	2
PHYSICAL	0

0 = Insignificant, 1 = Slight, 2 = Moderate, 3 = High, 4 = Extreme

SECTION 1. PRODUCT AND COMPANY IDENTIFICATION

Product name	:	Diesel Low Sulfur (LSD) and Ultra Low Sulfur Diesel (ULSD)			
Synonyms	:	CARB Diesel, 888100004478			
MSDS Number	:	888100004478	**Version**	:	2.19
Product Use Description	:	Fuel			
Company	:	For: Tesoro Refining & Marketing Co. 19100 Ridgewood Parkway, San Antonio, TX 78259			
Tesoro Call Center	:	(877) 783-7676	**Chemtrec (Emergency Contact)**	:	(800) 424-9300

SECTION 2. HAZARDS IDENTIFICATION

Emergency Overview

Regulatory status : This material is considered hazardous by the Occupational Safety and Health Administration (OSHA) Hazard Communication Standard (29 CFR 1910.1200).

Signal Word : WARNING

Hazard Summary : Toxic. Combustible Liquid

Potential Health Effects

Eyes : Eye irritation may result from contact with liquid, mists, and/or vapors.

Inhalation : Vapors or mists from this material can irritate the nose, throat, and lungs, and can cause signs and symptoms of central nervous system depression, depending on the concentration and duration of exposure.

Skin : Skin irritation leading to dermatitis may occur upon prolonged or repeated contact. Liquid may be absorbed through the skin in toxic amounts if large areas of skin are repeatedly exposed. Long-term, repeated skin contact may cause skin cancer

Ingestion : Harmful or fatal if swallowed. Do NOT induce vomiting. This material can irritate the mouth, throat, stomach, and cause nausea, vomiting, diarrhea and restlessness Aspiration hazard if liquid is inhaled into lungs, particularly from vomiting after ingestion. Aspiration may result in chemical pneumonia, severe lung damage, respiratory failure and even death.

Target Organs : Central nervous system, Eyes, Skin, Kidney, Liver

SECTION 3. COMPOSITION/INFORMATION ON INGREDIENTS

Component	CAS-No.	Weight %
Fuels, diesel, No 2; Gasoil - unspecified	68476-34-6	100%
Nonane	111-84-2	0 - 5%
Naphthalene	91-20-3	0 - 1%
1,2,4-Trimethylbenzene	95-63-6	0 - 2%
Xylene	1330-20-7	0 - 2%
Sulfur	7704-34-9	15 ppm maximum

SECTION 4. FIRST AID MEASURES

Inhalation : Move to fresh air. Give oxygen. If breathing is irregular or stopped, administer artificial respiration. Seek medical attention immediately.

Skin contact : Take off all contaminated clothing immediately. Wash off immediately with soap and plenty of water. Wash contaminated clothing before re-use. If skin irritation persists, seek medical attention immediately.

Eye contact : Remove contact lenses. Rinse thoroughly with plenty of water for at least 15 minutes. If symptoms persist, seek medical attention.

Ingestion : Do not induce vomiting without medical advice. If a person vomits when lying on his back, place him in the recovery position. Seek medical attention immediately.

Notes to physician : Symptoms: Dizziness, Discomfort, Headache, Nausea, Disorder, Vomiting, Lung edema, Aspiration may cause pulmonary edema and pneumonitis, Liver disorders, Kidney disorders.

SECTION 5. FIRE-FIGHTING MEASURES

Form : Liquid

Flash point : 38℃ Minimum for #1 Diesel, 52℃ Minimum for #2 Diesel

Auto Ignition temperature : 257 ℃ (495 ℉)

Lower explosive limit : 0.6 %(V)

Upper explosive limit : 4.7 %(V)

Suitable extinguishing media : Carbon dioxide (CO_2), Water spray, Dry chemical, Foam, Keep containers and surroundings cool with water spray.

Specific hazards during fire fighting : Fire Hazard Do not use a solid water stream as it may scatter and spread fire. Cool closed containers exposed to fire with water spray.

Special protective equipment for fire-fighters : Wear self-contained breathing apparatus and protective suit. Use personal protective equipment.

Further information : Exposure to decomposition products may be a hazard to health. Isolate area around container involved in fire. Cool tanks, shells, and containers exposed to fire and excessive heat with water. For massive fires the use of unmanned hose holders or monitor nozzles may be advantageous to further minimize personnel exposure. Major fires may require withdrawal, allowing the tank to burn. Large storage tank fires typically require specially trained personnel and equipment to extinguish the fire, often including the need for properly applied fire fighting foam.

SECTION 6. ACCIDENTAL RELEASE MEASURES

Personal precautions : Evacuate nonessential personnel and remove or secure all ignition sources. Consider wind direction; stay upwind and uphill, if possible. Evaluate the direction of product travel, diking, sewers, etc. to contain spill areas. Spills may infiltrate subsurface soil and groundwater; professional assistance may be necessary to determine the extent of subsurface impact. Ensure adequate ventilation. Use personal protective equipment.

Environmental precautions : Carefully contain and stop the source of the spill, if safe to do so. Protect bodies of water by diking, absorbents, or absorbent boom, if possible. Do not flush down sewer or drainage systems, unless system is designed and permitted to handle such material. The use of fire fighting foam may be useful in certain situations to reduce vapors. The proper use of water spray may effectively disperse product vapors or the liquid itself, preventing contact with ignition sources or areas/equipment that require protection. Discharge into the environment must be avoided. If the product contaminates rivers and lakes or drains inform respective authorities.

Methods for cleaning up : Take up with sand or oil absorbing materials. Carefully shovel, scoop or sweep up into a waste container for reclamation or disposal - caution, flammable vapors may accumulate in closed containers. Response and clean-up crews must be properly trained and must utilize proper protective equipment (see Section 8).

SECTION 7. HANDLING AND STORAGE

Handling : Keep away from fire, sparks and heated surfaces. No smoking near areas where material is stored or handled. The product should only be stored and handled in areas with intrinsically safe electrical classification.

Advice on protection against fire and explosion : Hydrocarbon liquids including this product can act as a non-conductive flammable liquid (or static accumulators), and may form ignitable vapor-air mixtures in storage tanks or other containers. Precautions to prevent static-initated fire or explosion during transfer, storage or handling, include but are not limited to these examples:

(1) Ground and bond containers during product transfers. Grounding and bonding may not be adequate protection to prevent ignition or explosion of hydrocarbon liquids and vapors that are static accumulators.
(2) Special slow load procedures for "switch loading" must be followed to avoid the static ignition hazard that can exist when higher flash point material (such as fuel oil or diesel) is loaded into tanks previously containing low flash point products (such gasoline or naphtha).
(3) Storage tank level floats must be effectively bonded.

For more information on precautions to prevent static-initated fire or explosion, see NFPA 77, Recommended Practice on Static Electricity (2007), and API

Recommended Practice 2003, Protection Against Ignitions Arising Out of Static, Lightning, and Stray Currents (2008).

Dust explosion class : Not applicable

Requirements for storage areas and containers : Keep away from flame, sparks, excessive temperatures and open flame. Use approved containers. Keep containers closed and clearly labeled. Empty or partially full product containers or vessels may contain explosive vapors. Do not pressurize, cut, heat, weld or expose containers to sources of ignition. Store in a well-ventilated area. The storage area should comply with NFPA 30 "Flammable and Combustible Liquid Code". The cleaning of tanks previously containing this product should follow API Recommended Practice (RP) 2013 "Cleaning Mobile Tanks In Flammable and Combustible Liquid Service" and API RP 2015 "Cleaning Petroleum Storage Tanks".

Other data : Emergency eye wash capability should be available in the near proximity to operations presenting a potential splash exposure.

Advice on common storage Keep away from food, drink and animal feed. Incompatible with oxidizing agents. Incompatible with acids.

SECTION 8. EXPOSURE CONTROLS / PERSONAL PROTECTION

Exposure Guidelines

List	Components	CAS-No.	Type:	Value
OSHA Z1	Xylene	1330-20-7	PEL	100 ppm 435 mg/m3
	Naphthalene	91-20-3	PEL	10 ppm 50 mg/m3
ACGIH	Diesel Fuel	68476-30-2	TWA	100 mg/m3
	Xylene	1330-20-7	TWA	100 ppm
		1330-20-7	STEL	150 ppm
	Naphthalene	91-20-3	TWA	10 ppm
		91-20-3	STEL	15 ppm
	Nonane	111-84-2	TWA	200 ppm

Engineering measures : Use adequate ventilation to keep gas and vapor concentrations of this product below occupational exposure and flammability limits, particularly in confined spaces. Use only intrinsically safe electrical equipment approved for use in classified areas.

Eye protection : Safety glasses or goggles are recommended where there is a possibility of splashing or spraying.

Hand protection : Gloves constructed of nitrile, neoprene, or PVC are recommended. Consult manufacturer specifications for further information.

Skin and body protection : If needed to prevent skin contact, chemical protective clothing such as of DuPont

		TyChem®, Saranex or equivalent recommended based on degree of exposure. The resistance of specific material may vary from product to product as well as with degree of exposure.
Respiratory protection	:	A NIOSH/ MSHA-approved air-purifying respirator with organic vapor cartridges or canister may be permissible under certain circumstances where airborne concentrations are or may be expected to exceed exposure limits or for odor or irritation. Protection provided by air-purifying respirators is limited. Refer to OSHA 29 CFR 1910.134, ANSI Z88.2-1992, NIOSH Respirator Decision Logic, and the manufacturer for additional guidance on respiratory protection selection. Use a NIOSH/ MSHA-approved positive-pressure supplied-air respirator if there is a potential for uncontrolled release, exposure levels are not known, in oxygen-deficient atmospheres, or any other circumstance where an air-purifying respirator may not provide adequate protection.
Work / Hygiene practices	:	Emergency eye wash capability should be available in the near proximity to operations presenting a potential splash exposure. Use good personal hygiene practices. Avoid repeated and/or prolonged skin exposure. Wash hands before eating, drinking, smoking, or using toilet facilities. Do not use as a cleaning solvent on the skin. Do not use solvents or harsh abrasive skin cleaners for washing this product from exposed skin areas. Waterless hand cleaners are effective. Promptly remove contaminated clothing and launder before reuse. Use care when laundering to prevent the formation of flammable vapors which could ignite via washer or dryer. Consider the need to discard contaminated leather shoes and gloves.

SECTION 9. PHYSICAL AND CHEMICAL PROPERTIES

Form	:	Liquid
Appearance	:	Clear, straw colored
Odor	:	Characteristic petroleum (kerosene) odor
Flash point - typical	:	38℃ Minimum for #1 Diesel, 52℃ Minimum for #2 Diesel
Auto Ignition temperature	:	257 ℃ (495 ℉)
Thermal decomposition	:	No decomposition if stored and applied as directed.
Lower explosive limit	:	0.6 %(V)
Upper explosive limit	:	4.7 %(V)
pH	:	Not applicable
Freezing point	:	No data available
Boiling point	:	154 - 372 ℃(310° - 702 ℉)
Vapor Pressure	:	< 2 mm Hg at 20 ℃
Density	:	**0.86** g/cm3
Water solubility	:	Negligible
Viscosity, dynamic	:	1.7 - 40 mPa.s at 37.8 ℃ (100.0 ℉)

Percent Volatiles	:	100 %
Conductivity (conductivity can be reduced by environmental factors such as a decrease in temperature		Diesel Fuel Oils at terminal load rack: At least 25 pS/m Ultra Low Sulfur Diesel (ULSD) without conductivity additive: 0 pS/m to 5 pS/m ULSD at terminal load rack with conductivity additive: At least 50 pS/m but conductivity may decrease from environmental factors such as temperature drop. JP-8 at terminal load rack: 150 pS/m to 600 pS/m

SECTION 10. STABILITY AND REACTIVITY

Conditions to avoid	:	Avoid high temperatures, open flames, sparks, welding, smoking and other ignition sources. Keep away from strong oxidizers. Viton ® ; Fluorel ®
Materials to avoid	:	Strong oxidizing agents. Peroxides
Hazardous decomposition products	:	Carbon monoxide, carbon dioxide and noncombusted hydrocarbons (smoke). Diesel exhaust particulates may be a lung hazard - see Section 11.
Thermal decomposition	:	No decomposition if stored and applied as directed.
Hazardous reactions	:	Keep away from oxidizing agents, and acidic or alkaline products.

SECTION 11. TOXICOLOGICAL INFORMATION

Carcinogenicity

NTP	:	Naphthalene (CAS-No.: 91-20-3)
IARC	:	Naphthalene (CAS-No.: 91-20-3)
OSHA	:	No component of this product which is present at levels greater than or equal to 0.1 % is identified as a carcinogen or potential carcinogen by OSHA.
CA Prop 65	:	WARNING! This product contains a chemical known to the State of California to cause cancer. naphthalene (CAS-No.: 91-20-3)
Skin irritation	:	Irritating to skin.
Eye irritation	:	Irritating to eyes.
Further information	:	Studies have shown that similar products produce skin cancer or skin tumors in laboratory animals following repeated applications without washing or removal. The significance of this finding to human exposure has not been determined. Other studies with active skin carcinogens have shown that washing the animal's skin with soap and water between applications reduced tumor formation. Positive mutagenicity results have been reported. Repeated over-exposure may cause liver and kidney injury IARC classifies whole diesel fuel exhaust particulates as probably carcinogenic to humans (Group 2A). NIOSH regards whole diesel fuel exhaust particulates as a potential cause of occupational lung cancer based on animal studies and limited evidence in humans.

Component:

Fuels, diesel, No 2; Gasoil - unspecified	68476-34-6	Acute oral toxicity: LD50 rat Dose: 5,001 mg/kg Acute dermal toxicity: LD50 rabbit

		Dose: 2,001 mg/kg Acute inhalation toxicity: LC50 rat Dose: 7.64 mg/l Exposure time: 4 h Skin irritation: Classification: Irritating to skin. Result: Severe skin irritation Eye irritation: Classification: Irritating to eyes. Result: Mild eye irritation
Nonane	111-84-2	Acute oral toxicity: LD50 mouse Dose: 218 mg/kg Acute inhalation toxicity: LC50 rat Exposure time: 4 h
Naphthalene	91-20-3	Acute oral toxicity: LD50 rat Dose: 2,001 mg/kg Acute dermal toxicity: LD50 rat Dose: 2,501 mg/kg Acute inhalation toxicity: LC50 rat Dose: 101 mg/l Exposure time: 4 h Skin irritation: Classification: Irritating to skin. Result: Mild skin irritation Eye irritation: Classification: Irritating to eyes. Result: Mild eye irritation Carcinogenicity: N11.00422130
1,2,4-Trimethylbenzene	95-63-6	Acute inhalation toxicity: LC50 rat Dose: 18 mg/l Exposure time: 4 h Skin irritation: Classification: Irritating to skin. Result: Skin irritation Eye irritation: Classification: Irritating to eyes. Result: Eye irritation
Xylene	1330-20-7	Acute oral toxicity: LD50 rat Dose: 2,840 mg/kg Acute dermal toxicity: LD50 rabbit Dose: ca. 4,500 mg/kg Acute inhalation toxicity: LC50 rat Dose: 6,350 mg/l Exposure time: 4 h Skin irritation: Classification: Irritating to skin. Result: Mild skin irritation Repeated or prolonged exposure may cause skin irritation and dermatitis, due to degreasing properties of the product. Eye irritation: Classification: Irritating to eyes. Result: Mild eye irritation

SECTION 12. ECOLOGICAL INFORMATION

Additional ecological : Keep out of sewers, drainage areas, and waterways. Report spills and releases, as

information applicable, under Federal and State regulations.

Component:

Naphthalene	91-20-3	Toxicity to algae: EC50 Species: Dose: 33 mg/l Exposure time: 24 h
1,2,4-Trimethylbenzene	95-63-6	Toxicity to fish: LC50 Species: Pimephales promelas (fathead minnow) Dose: 7.72 mg/l Exposure time: 96 h Acute and prolonged toxicity for aquatic invertebrates: EC50 Species: Daphnia Dose: 3.6 mg/l Exposure time: 48 h

SECTION 13. DISPOSAL CONSIDERATIONS

Disposal : In accordance with local and national regulations.

SECTION 14. TRANSPORT INFORMATION

CFR

Proper shipping name	: DIESEL FUEL
UN-No.	: UN1202 (NA 1993)
Class	: 3
Packing group	: III

TDG

Proper shipping name	: DIESEL FUEL
UN-No.	: UN1202 (NA 1993)
Class	: 3
Packing group	: III

IATA Cargo Transport

UN UN-No.	: UN1202 (NA 1993)
Description of the goods	: DIESEL FUEL
Class	: 3
Packaging group	: III
ICAO-Labels	: 3
Packing instruction (cargo aircraft)	: 366
Packing instruction (cargo aircraft)	: Y344

IATA Passenger Transport

UN UN-No.	: UN1202 (NA 1993)
Description of the goods	: DIESEL FUEL
Class	: 3
Packaging group	: III

ICAO-Labels	:	3
Packing instruction (passenger aircraft)	:	355
Packing instruction (passenger aircraft)	:	Y344

IMDG-Code

UN-No.	:	UN 1202 (NA 1993)
Description of the goods	:	DIESEL FUEL
Class	:	3
Packaging group	:	III
IMDG-Labels	:	3
EmS Number	:	F-E S-E
Marine pollutant	:	No

SECTION 15. REGULATORY INFORMATION

OSHA Hazards : Combustible Liquid
Moderate skin irritant
Moderate eye irritant
Toxic by ingestion
POSSIBLE CANCER HAZARD

CERCLA SECTION 103 and SARA SECTION 304 (RELEASE TO THE ENVIROMENT)
The CERCLA definition of hazardous substances contains a "petroleum exclusion" clause which exempts crude oil. Fractions of crude oil, and products (both finished and intermediate) from the crude oil refining process and any indigenous components of such from the CERCLA Section 103 reporting requirements. However, other federal reporting requirements, including SARA Section 304, as well as the Clean Water Act may still apply.

TSCA Status : On TSCA Inventory

DSL Status : All components of this product are on the Canadian DSL list.

SARA 311/312 Hazards : Fire Hazard
Acute Health Hazard
Chronic Health Hazard

SARA III US. EPA Emergency Planning and Community Right-To-Know Act (EPCRA) SARA Title III Section 313 Toxic Chemicals (40 CFR 372.65) - Supplier Notification Required

Components	CAS-No.
Xylene	1330-20-7
1,2,4-Trimethylbenzene	95-63-6
Naphthalene	91-20-3

PENN RTK US. Pennsylvania Worker and Community Right-to-Know Law (34 Pa. Code Chap. 301-323)

Components	CAS-No.
Nonane	111-84-2

Naphthalene	91-20-3
1,2,4-Trimethylbenzene	95-63-6
xylene	1330-20-7
Fuels, diesel, No 2; Gasoil - unspecified	68476-34-6

MASS RTK — US. Massachusetts Commonwealth's Right-to-Know Law (Appendix A to 105 Code of Massachusetts Regulations Section 670.000)

Components	CAS-No.
Xylene	1330-20-7
1,2,4-Trimethylbenzene	95-63-6
Naphthalene	91-20-3
Nonane	111-84-2

NJ RTK — US. New Jersey Worker and Community Right-to-Know Act (New Jersey Statute Annotated Section 34:5A-5)

Components	CAS-No.
Nonane	111-84-2
Naphthalene	91-20-3
1,2,4-Trimethylbenzene	95-63-6
Xylene	1330-20-7
Fuels, diesel, No 2; Gasoil - unspecified	68476-34-6

California Prop. 65 : WARNING! This product contains a chemical known to the State of California to cause cancer.

Naphthalene 91-20-3

SECTION 16. OTHER INFORMATION

Further information

The information provided in this Safety Data Sheet is correct to the best of our knowledge, information and belief at the date of its publication. The information given is designed only as guidance for safe handling, use, processing, storage, transportation, disposal and release and is not to be considered a warranty or quality specification. The information relates only to the specific material designated and may not be valid for such material used in combination with any other materials or in any process, unless specified in the text.

Template Prepared by : GWU mbH
Birlenbacher Str. 18
D-57078 Siegen

Germany

Telephone: +49-(0)271-88072-0

12/01/2011

1153, 1250, 1443, 1454, 1814, 1815, 1866, 1925

MATERIAL SAFETY DATA SHEET — 16 Sections

SECTION 1 — CHEMICAL PRODUCT AND COMPANY IDENTIFICATION

Product Identifier **MetalRx Leaf Media**		[WHMIS Classification] Not controlled	
Product Use Adsorbent, filtration media			
Manufacturer's Name Contech Construction Products Inc.		Supplier's Name Contech Construction Products Inc.	
Street Address 9025 Centre Pointe Dr. Suite 400		Street Address 9025 Centre Pointe Dr. Suite 400	
City West Chester	State OH	City West Chester	State OH
Postal Code 45069	Emergency Telephone 1-800-338-1122	Postal Code 45069	Emergency Telephone 1-800-338-1122
Date MSDS Prepared 06/04/2010	MSDS Prepared By Jia Ma	Phone Number 503-408-5268	

SECTION 2 — COMPOSITION/INFORMATION ON INGREDIENTS

Hazardous Ingredients *(specific)*	%	CAS Number	LD_{50} of Ingredient *(specify species and route*	LC_{50} of Ingredient *(specify species)*
Earth-Wise Certified Compost	100	N/A	Unknown	Unknown

SECTION 3 — HAZARDS IDENTIFICATION

Route of Entry ❒ Skin Contact ❒ Skin Absorption ❒ Eye Contact ☒ Inhalation ❒ Ingestion

Emergency Overview

WHMIS Symbols]: Not controlled

Potential Health Effects

Swallowing is unlikely under normal conditions. If so, it may cause abdominal discomfort and increase the risk of gastro-intestinal infections. The dust may be irritating to the eyes resulting in redness and watering, or eye infection. Skin contact with the product and its dusts may result in skin irritation. Inhalation of dusts may irritate the nose, throat and lungs, and aggravate pre-existing conditions such as asthma and bronchitis. Excessive inhalation over long period may cause harmful coughing and irritation; use mask suitable for nuisance dust.

SECTION 4 — FIRST AID MEASURES

Skin Contact: Wash skin thoroughly with mild soap and water.

Eye Contact: Flush eyes thoroughly with water, taking care to rinse under eyelids. If irritation persists, continue flushing for 15 minutes, rinsing from time to time under eyelids. If discomfort continues, consult a physician. Do not scrub, since the abrasion may cause irritation.

Inhalation: If overcome by high dust concentration, remove to a ventilated area.

Ingestion: Give water to drink. Seek medical attention if any abdominal symptoms.

Please continue on reverse side

Blank form provided courtesy of www.ehso.com/msdscreate.php

SECTION 5 — FIRE FIGHTING MEASURES

Flammable ❒ Yes × No	If yes, under which conditions?	
Means of Extinction Not applicable		
Flashpoint (°C) and Method Not applicable	Upper Flammable Limit (% by volume) Not applicable	Lower Flammable Limit (% by volume) Not applicable
Autoignition Temperature (°C) Not applicable	Explosion Data — Sensitivity to Impact Not applicable	Explosion Data — Sensitivity to Static Discharge Not applicable
Hazardous Combustion Products Not applicable		
[NFPA] Not applicable		

SECTION 6 — ACCIDENTAL RELEASE MEASURES

Leak and Spill Procedures
Sweep up using dust suppressant such as water. Uncontaminated materials may be reused.

SECTION 7 — HANDLING AND STORAGE

Handling Procedures and Equipment
No special transport requirement are necessary. Avoid generating dust during handling. Masks suitable for nuisance dust.
Storage Requirements
A cool and dry area is preferred.

SECTION 8 — EXPOSURE CONTROL / PERSONAL PROTECTION

Exposure Limits × ACGIH TLV		× OSHA PEL		❒ Other *(specify)*	
Specific Engineering Controls *(such as ventilation, enclosed process)* Adequate Ventilation.					
Maintain dust level below TLV/PEL. Perlite/ Respirable Dust	TLV 10 mg/M3	PEL 15 mg/M3			
Personal Protective Equipment ❒ Gloves	× Respirator	× Eye	❒ Footwear	× Clothing	× Other
If checked, please specify type	MSHA/NIOSH approved respirator.	Protective/safety goggles		Use good housekeeping to avoid transient	Masks suitable for nuisance dust

SECTION 9 — PHYSICAL AND CHEMICAL PROPERTIES

Physical State Granules, pellets	Odor and Appearance Earthy/Brown granules	Odor Threshold (ppm)
Specific Gravity >1 (granules)	Vapor Density (air = 1) N/A	Vapor Pressure (mmHg) N/A
Evaporation Rate N/A	Boiling Point (°C) N/A	Freezing Point (°C) N/A
pH 5-9 (Dissolved in water)	Coefficient of Water/Oil Distribution N/A	[Solubility in Water] Negligible

SECTION 10 — STABILITY AND REACTIVITY

Chemical Stability: × Yes ❒ No	If no, under which conditions?
Incompatibility with Other Substances ❒ Yes × No	If yes, which ones?

Reactivity, and under what conditions?

Not available.

Hazardous Decomposition Products

Not available.

SECTION 11 — TOXICOLOGICAL INFORMATION

Effects of Acute Exposure	
None	
Effects of chronic exposure	
Inhalation of high concentrations of inert nuisance particulates could result in mild irritation of the respiratory tract.	
Skin contact and eye contact may cause irritation through mechanical abrasion.	
Irritancy of Product	
Skin sensitization	Respiratory sensitization
Carcinogenicity-IARC: No..	Carcinogenicity - ACGIH
Reproductive toxicity	Teratogenicity
Embrotoxicity	Mutagenicity
Name of synergistic products/effects	

Blank form provided courtesy of www.ehso.com/msdscreate.php

Please continue on reverse side

SECTION 12 — ECOLOGICAL INFORMATION

[Aquatic Toxicity]

No effects are tested from this insoluble product.

SECTION 13 — DISPOSAL CONSIDERATIONS

Waste Disposal

Recycle if possible. This product contains organic leaves and does not require special disposal methods. Dispose of waste in accordance with federal, state, or local regulations.

SECTION 14 — TRANSPORT INFORMATION

Special Shipping Information			
			PIN
TDG	Not regulated	[DOT]	Not regulated
[IMO]	Not regulated	[ICAO]	Not regulated

SECTION 15 — REGULATORY INFORMATION

[WHMIS Classification] *Not controlled*	[OSHA]
[SERA]	[TSCA] This substance and all the ingredients of this product are on the Chemical Substances Inventory of the Toxic Substances Control Act (USA). The presence on these lists does not require any legal reporting.

This product has been classified in accordance with the hazard criteria of the Controlled Products Regulations (CPR) and the MSDS contains all of the information required by CPR.

SECTION 16 — OTHER INFORMATION

National Fire Protection Agency (NFPA) codes – (health, flammability, reactivity): 1, 0, 0
Hazardous Material Information System (HMIS) – (health, flammability, reactivity): 1, 0, 0

Blank form provided courtesy of www.ehso.com/msdscreate.php

MATERIAL SAFETY DATA SHEET

SECTION 1 PRODUCT AND COMPANY IDENTIFICATION

PRODUCT

Product Name: **ACTREL 1138L CLEANER**
Product Description: Dearomatized Hydrocarbons

Intended Use: Cleaner/degreaser

COMPANY IDENTIFICATION

Supplier: **EXXONMOBIL CHEMICAL COMPANY**
P.O. BOX 3272
HOUSTON, TX. 77253-3272 USA

24 Hour Health Emergency (800) 726-2015
Transportation Emergency Phone (800) 424-9300 or (703) 527-3887 CHEMTREC
Product Technical Information (281) 870-6000/Health & Medical (281) 870-6884
Supplier General Contact (281) 870-6000

SECTION 2 COMPOSITION / INFORMATION ON INGREDIENTS

Reportable Hazardous Substance(s) or Complex Substance(s)

Name	CAS#	Concentration*
DISTILLATES (PETROLEUM), HYDROTREATED LIGHT	64742-47-8	100 %

Hazardous Constituent(s) Contained in Complex Substance(s)

Name	CAS#	Concentration*
NONANE	111-84-2	1 - 5%

* All concentrations are percent by weight unless material is a gas. Gas concentrations are in percent by volume. Concentration values may vary.

SECTION 3 HAZARDS IDENTIFICATION

This material is considered to be hazardous according to regulatory guidelines (see (M)SDS Section 15).

POTENTIAL PHYSICAL / CHEMICAL EFFECTS

Combustible. Material can release vapors that readily form flammable mixtures. Vapor accumulation could flash and/or explode if ignited. Material can accumulate static charges which may cause an ignition.

POTENTIAL HEALTH EFFECTS

Repeated exposure may cause skin dryness or cracking. If swallowed, may be aspirated and cause lung damage. May be irritating to the eyes, nose, throat, and lungs. Vapors may cause drowsiness and dizziness.

NFPA Hazard ID:	Health:	1	Flammability:	2	Reactivity:	0
HMIS Hazard ID:	Health:	1	Flammability:	2	Reactivity:	0

NOTE: This material should not be used for any other purpose than the intended use in Section 1 without expert advice. Health studies have shown that chemical exposure may cause potential human health risks which may vary from person to person.

SECTION 4 FIRST AID MEASURES

INHALATION

Remove from further exposure. For those providing assistance, avoid exposure to yourself or others. Use adequate respiratory protection. If respiratory irritation, dizziness, nausea, or unconsciousness occurs, seek immediate medical assistance. If breathing has stopped, assist ventilation with a mechanical device or use mouth-to-mouth resuscitation.

SKIN CONTACT

Wash contact areas with soap and water. Remove contaminated clothing. Launder contaminated clothing before reuse.

EYE CONTACT

Flush thoroughly with water. If irritation occurs, get medical assistance.

INGESTION

Seek immediate medical attention. Do not induce vomiting.

NOTE TO PHYSICIAN

If ingested, material may be aspirated into the lungs and cause chemical pneumonitis. Treat appropriately.

SECTION 5 FIRE FIGHTING MEASURES

EXTINGUISHING MEDIA

Appropriate Extinguishing Media: Use water fog, foam, dry chemical or carbon dioxide (CO_2) to extinguish flames.

Inappropriate Extinguishing Media: Straight Streams of Water

FIRE FIGHTING

Fire Fighting Instructions: Flammable. Evacuate area. Prevent runoff from fire control or dilution from entering streams, sewers, or drinking water supply. Firefighters should use standard protective equipment and in enclosed spaces, self-contained breathing apparatus (SCBA). Use water spray to cool fire exposed surfaces and to protect personnel.

Unusual Fire Hazards: Combustible. Vapors are flammable and heavier than air. Vapors may travel across the ground and reach remote ignition sources causing a flashback fire danger. Hazardous material. Firefighters should consider protective equipment indicated in Section 8.

Hazardous Combustion Products: Smoke, Fume, Incomplete combustion products, Oxides of carbon

FLAMMABILITY PROPERTIES

Flash Point [Method]: >38°C (100°F) [ASTM D-56]
Flammable Limits (Approximate volume % in air): LEL: 0.8 UEL: 5.7
Autoignition Temperature: 258°C (496°F)

SECTION 6 ACCIDENTAL RELEASE MEASURES

NOTIFICATION PROCEDURES

In the event of a spill or accidental release, notify relevant authorities in accordance with all applicable regulations. US regulations require reporting releases of this material to the environment which exceed the applicable reportable quantity or oil spills which could reach any waterway including intermittent dry creeks. The National Response Center can be reached at (800)424-8802.

PROTECTIVE MEASURES

Avoid contact with spilled material. Warn or evacuate occupants in surrounding and downwind areas if required due to toxicity or flammability of the material. See Section 5 for fire fighting information. See the Hazard Identification Section for Significant Hazards. See Section 4 for First Aid Advice. See Section 8 for advice on the minimum requirements for personal protective equipment. Additional protective measures may be necessary, depending on the specific circumstances and/or the expert judgment of the emergency responders. For emergency responders: Respiratory protection: half-face or full-face respirator with filter(s) for organic vapor and, when applicable, H2S, or Self Contained Breathing Apparatus (SCBA) can be used depending on the size of spill and potential level of exposure. If the exposure cannot be completely characterized or an oxygen deficient atmosphere is possible or anticipated, SCBA is recommended. Work gloves that are resistant to aromatic hydrocarbons are recommended. Note: gloves made of polyvinyl acetate (PVA) are not water-resistant and are not suitable for emergency use. Chemical goggles are recommended if splashes or contact with eyes is possible. Small spills: normal antistatic work clothes are usually adequate. Large spills: full body suit of chemical resistant, antistatic material is recommended.

SPILL MANAGEMENT

Land Spill: Eliminate all ignition sources (no smoking, flares, sparks or flames in immediate area). Stop leak if you can do it without risk. All equipment used when handling the product must be grounded. Do not touch or walk through spilled material. Prevent entry into waterways, sewer, basements or confined areas. A vapor suppressing foam may be used to reduce vapors. Use clean non-sparking tools to collect absorbed material. Absorb or cover with dry earth, sand or other non-combustible material and transfer to containers. Large Spills: Water spray may reduce vapor; but may not prevent ignition in closed spaces.

Water Spill: Stop leak if you can do it without risk. Eliminate sources of ignition. Warn other shipping. If the Flash Point exceeds the Ambient Temperature by 10 degrees C or more, use containment booms and remove from the surface by skimming or with suitable absorbents when conditions permit. If the Flash Point does not exceed the Ambient Air Temperature by at least 10C, use booms as a barrier to protect shorelines and allow material to evaporate. Seek the advice of a specialist before using dispersants.

Water spill and land spill recommendations are based on the most likely spill scenario for this material; however, geographic conditions, wind, temperature, (and in the case of a water spill) wave and current direction and speed may greatly influence the appropriate action to be taken. For this reason, local experts should be consulted. Note: Local regulations may prescribe or limit action to be taken.

ENVIRONMENTAL PRECAUTIONS

Large Spills: Dike far ahead of liquid spill for later recovery and disposal. Prevent entry into waterways, sewers, basements or confined areas.

SECTION 7 HANDLING AND STORAGE

HANDLING

Avoid contact with skin. Prevent small spills and leakage to avoid slip hazard. Material can accumulate static charges which may cause an electrical spark (ignition source). Use proper bonding and/or ground procedures. However, bonding and grounds may not eliminate the hazard from static accumulation. Consult local applicable standards for guidance. Additional references include American Petroleum Institute 2003 (Protection Against Ignitions Arising out of Static, Lightning and Stray Currents) or National Fire Protection Agency 77 (Recommended Practice on Static Electricity) or CENELEC CLC/TR 50404 (Electrostatics - Code of practice for the avoidance of hazards due to static electricity).

Loading/Unloading Temperature: [Ambient]

Transport Temperature: [Ambient]
Transport Pressure: [Ambient]

Static Accumulator: This material is a static accumulator. A liquid is typically considered a nonconductive, static accumulator if its conductivity is below 100 pS/m (100x10E-12 Siemens per meter) and is considered a semiconductive, static accumulator if its conductivity is below 10,000 pS/m. Whether a liquid is nonconductive or semiconductive, the precautions are the same. A number of factors, for example liquid temperature, presence of contaminants, anti-static additives and filtration can greatly influence the conductivity of a liquid.

STORAGE

The container choice, for example storage vessel, may effect static accumulation and dissipation. Keep container closed. Handle containers with care. Open slowly in order to control possible pressure release. Store in a cool, well-ventilated area. Storage containers should be grounded and bonded. Fixed storage containers, transfer containers and associated equipment should be grounded and bonded to prevent accumulation of static charge.
Storage Temperature: [Ambient]
Storage Pressure: [Ambient]

Suitable Containers/Packing: Tank Cars; Tank Trucks; Drums
Suitable Materials and Coatings (Chemical Compatibility): Stainless Steel; Carbon Steel; Polypropylene; Polyethylene; Teflon
Unsuitable Materials and Coatings: Natural Rubber; Butyl Rubber; Ethylene-proplyene-diene monomer (EPDM); Polystyrene

SECTION 8 EXPOSURE CONTROLS / PERSONAL PROTECTION

EXPOSURE LIMIT VALUES

Exposure limits/standards (Note: Exposure limits are not additive)

Source	Form	Limit / Standard			NOTE	Source
DISTILLATES (PETROLEUM), HYDROTREATED LIGHT	Vapor.	RCP - TWA	1200 mg/m3	213 ppm	Total Hydrocarbons	ExxonMobil
NONANE		TWA	200 ppm		N/A	ACGIH

NOTE: Limits/standards shown for guidance only. Follow applicable regulations.

ENGINEERING CONTROLS

The level of protection and types of controls necessary will vary depending upon potential exposure conditions. Control measures to consider:
Adequate ventilation should be provided so that exposure limits are not exceeded. Use explosion-proof ventilation equipment.

PERSONAL PROTECTION

Personal protective equipment selections vary based on potential exposure conditions such as applications, handling practices, concentration and ventilation. Information on the selection of protective equipment for use with this material, as provided below, is based upon intended, normal usage.

Respiratory Protection: If engineering controls do not maintain airborne contaminant concentrations at a level which is adequate to protect worker health, an approved respirator may be appropriate. Respirator selection, use, and maintenance must be in accordance with regulatory requirements, if applicable. Types of respirators to be considered for this material include:
Half-face filter respirator

For high airborne concentrations, use an approved supplied-air respirator, operated in positive pressure mode. Supplied air respirators with an escape bottle may be appropriate when oxygen levels are inadequate, gas/vapor warning properties are poor, or if air purifying filter capacity/rating may be exceeded.

Hand Protection: Any specific glove information provided is based on published literature and glove manufacturer data. Glove suitability and breakthrough time will differ depending on the specific use conditions. Contact the glove manufacturer for specific advice on glove selection and breakthrough times for your use conditions. Inspect and replace worn or damaged gloves. The types of gloves to be considered for this material include:
Chemical resistant gloves are recommended.

Eye Protection: If contact is likely, safety glasses with side shields are recommended.

Skin and Body Protection: Any specific clothing information provided is based on published literature or manufacturer data. The types of clothing to be considered for this material include:
Chemical/oil resistant clothing is recommended.

Specific Hygiene Measures: Always observe good personal hygiene measures, such as washing after handling the material and before eating, drinking, and/or smoking. Routinely wash work clothing and protective equipment to remove contaminants. Discard contaminated clothing and footwear that cannot be cleaned. Practice good housekeeping.

ENVIRONMENTAL CONTROLS

Comply with applicable environmental regulations limiting discharge to air, water and soil. Protect the environment by applying appropriate control measures to prevent or limit emissions.

SECTION 9 PHYSICAL AND CHEMICAL PROPERTIES

Note: Physical and chemical properties are provided for safety, health and environmental considerations only and may not fully represent product specifications. Contact the Supplier for additional information.

GENERAL INFORMATION

Physical State: Liquid
Form: Clear
Color: Colorless
Odor: Mild Petroleum/Solvent
Odor Threshold: N/D

IMPORTANT HEALTH, SAFETY, AND ENVIRONMENTAL INFORMATION

Relative Density (at 15.6 °C): 0.772
Density (at 15 ºC): 773 kg/m³ (6.45 lbs/gal, 0.77 kg/dm³)
Flash Point [Method]: >38°C (100°F) [ASTM D-56]
Flammable Limits (Approximate volume % in air): LEL: 0.8 UEL: 5.7
Autoignition Temperature: 258°C (496°F)
Boiling Point / Range: 161°C (322°F) - 176°C (349°F)
Vapor Density (Air = 1): 4.7 at 101 kPa
Vapor Pressure: 0.262 kPa (1.97 mm Hg) at 20 °C
Evaporation Rate (n-butyl acetate = 1): 0.26
pH: N/A
Log Pow (n-Octanol/Water Partition Coefficient): N/D
Solubility in Water: Negligible
Viscosity: 1.01 cSt (1.01 mm2/sec) at 40 °C | 1.17 cSt (1.17 mm2/sec) at 25°C
Oxidizing Properties: See Hazards Identification Section.

OTHER INFORMATION

Freezing Point: -59°C (-74°F)
Melting Point: N/A
Pour Point: < 60°C (140°F)
Molecular Weight: 137
Hygroscopic: No
Coefficient of Thermal Expansion: 0.00078 V/VDEGC

SECTION 10 STABILITY AND REACTIVITY

STABILITY: Material is stable under normal conditions.

CONDITIONS TO AVOID: Avoid heat, sparks, open flames and other ignition sources.

MATERIALS TO AVOID: Strong oxidizers

HAZARDOUS DECOMPOSITION PRODUCTS: Material does not decompose at ambient temperatures.

HAZARDOUS POLYMERIZATION: Will not occur.

SECTION 11 TOXICOLOGICAL INFORMATION

ACUTE TOXICITY

Route of Exposure	Conclusion / Remarks
Inhalation	
Toxicity: Data available.	May cause central nervous system effects.
Irritation: Data available.	Negligible hazard at ambient/normal handling temperatures.
Ingestion	
Toxicity: LD50 > 15000 mg/kg	Minimally Toxic. Based on test data for structurally similar

	materials.
Skin	
Toxicity: LD50 > 3160 mg/kg	Minimally Toxic. Based on test data for structurally similar materials.
Irritation: Data available.	Mildly irritating to skin with prolonged exposure.
Eye	
Irritation: Data available.	May cause mild, short-lasting discomfort to eyes.

CHRONIC/OTHER EFFECTS

For the product itself:

Vapor/aerosol concentrations above recommended exposure levels are irritating to the eyes and respiratory tract, may cause headaches, dizziness, anesthesia, drowsiness, unconsciousness and other central nervous system effects including death.
Prolonged and/or repeated skin contact with low viscosity materials may defat the skin resulting in possible irritation and dermatitis.
Small amounts of liquid aspirated into the lungs during ingestion or from vomiting may cause chemical pneumonitis or pulmonary edema.

Additional information is available by request.

The following ingredients are cited on the lists below: None.

--REGULATORY LISTS SEARCHED--

1 = NTP CARC	3 = IARC 1	5 = IARC 2B
2 = NTP SUS	4 = IARC 2A	6 = OSHA CARC

SECTION 12 ECOLOGICAL INFORMATION

The information given is based on data available for the material, the components of the material, and similar materials.

ECOTOXICITY

Material -- Not expected to be harmful to aquatic organisms.
Material -- Not expected to demonstrate chronic toxicity to aquatic organisms.

PERSISTENCE AND DEGRADABILITY

Biodegradation:

Material -- Expected to be readily biodegradable.

Hydrolysis:

Material -- Transformation due to hydrolysis not expected to be significant.

Photolysis:

Material -- Transformation due to photolysis not expected to be significant.

Atmospheric Oxidation:

Material -- Expected to degrade rapidly in air

OTHER ECOLOGICAL INFORMATION

VOC (EPA Method 24): 6.442 lbs/gal

SECTION 13 DISPOSAL CONSIDERATIONS

Disposal recommendations based on material as supplied. Disposal must be in accordance with current applicable laws and regulations, and material characteristics at time of disposal.

DISPOSAL RECOMMENDATIONS

Product is suitable for burning in an enclosed controlled burner for fuel value or disposal by supervised incineration at very high temperatures to prevent formation of undesirable combustion products.

REGULATORY DISPOSAL INFORMATION

RCRA Information: Disposal of unused product may be subject to RCRA regulations (40 CFR 261). Disposal of the used product may also be regulated due to ignitability, corrosivity, reactivity or toxicity as determined by the Toxicity Characteristic Leaching Procedure (TCLP). Potential RCRA characteristics: IGNITABILITY.

Empty Container Warning Empty Container Warning (where applicable): Empty containers may contain residue and can be dangerous. Do not attempt to refill or clean containers without proper instructions. Empty drums should be completely drained and safely stored until appropriately reconditioned or disposed. Empty containers should be taken for recycling, recovery, or disposal through suitably qualified or licensed contractor and in accordance with governmental regulations. DO NOT PRESSURISE, CUT, WELD, BRAZE, SOLDER, DRILL, GRIND, OR EXPOSE SUCH CONTAINERS TO HEAT, FLAME, SPARKS, STATIC ELECTRICITY, OR OTHER SOURCES OF IGNITION. THEY MAY EXPLODE AND CAUSE INJURY OR DEATH.

SECTION 14 TRANSPORT INFORMATION

LAND (DOT)

Proper Shipping Name: PETROLEUM DISTILLATES, N.O.S.
Hazard Class & Division: 3
ID Number: 1268
Packing Group: III
ERG Number: 128
Label(s): 3
Transport Document Name: UN1268, PETROLEUM DISTILLATES, N.O.S., 3, PG III

Footnote: The flash point of this material is greater than 100 F. Regulatory classification of this material varies. DOT: Flammable liquid or combustible liquid. OSHA: Combustible liquid. IATA/IMO: Flammable liquid.

LAND (TDG)

Proper Shipping Name: PETROLEUM DISTILLATES, N.O.S.
Hazard Class & Division: 3
UN Number: 1268
Packing Group: III

SEA (IMDG)

Proper Shipping Name: PETROLEUM DISTILLATES, N.O.S.
Hazard Class & Division: 3
EMS Number: F-E, S-E
UN Number: 1268

Packing Group: III
Label(s): 3
Transport Document Name: UN1268, PETROLEUM DISTILLATES, N.O.S., 3, PG III, (>38°C c.c.)

AIR (IATA)
Proper Shipping Name: PETROLEUM DISTILLATES, N.O.S.
Hazard Class & Division: 3
UN Number: 1268
Packing Group: III
Label(s) / Mark(s): 3
Transport Document Name: UN1268, PETROLEUM DISTILLATES, N.O.S., 3, PG III

SECTION 15 REGULATORY INFORMATION

OSHA HAZARD COMMUNICATION STANDARD: When used for its intended purpose, this material is classified as hazardous in accordance with OSHA 29CFR 1910.1200.

Complies with the following national/regional chemical inventory requirements:: ENCS, IECSC, DSL, AICS, TSCA, KECI, PICCS

EPCRA: This material contains no extremely hazardous substances.

CERCLA: This material is not subject to any special reporting under the requirements of the Comprehensive Environmental Response, Compensation and Liability Act (CERCLA). CERCLA petroleum exclusion applies for this product. Contact local authorities to determine if other reporting requirements apply.

CWA / OPA: This product is classified as an oil under Section 311 of the Clean Water Act (40 CFR 110) and the Oil Pollution Act of 1990. Discharge or spills which produce a visible sheen on either surface water, or in waterways/sewers which lead to surface water, must be reported to the National Response Center at 800-424-8802.

SARA (311/312) REPORTABLE HAZARD CATEGORIES: Fire.

SARA (313) TOXIC RELEASE INVENTORY: This material contains no chemicals subject to the supplier notification requirements of the SARA 313 Toxic Release Program.

The following ingredients are cited on the lists below:

Chemical Name	CAS Number	List Citations
DISTILLATES (PETROLEUM), HYDROTREATED LIGHT	64742-47-8	17, 18, 19
NONANE	111-84-2	1, 5, 9, 13, 16, 17, 18, 19

--REGULATORY LISTS SEARCHED--

1 = ACGIH ALL	6 = TSCA 5a2	11 = CA P65 REPRO	16 = MN RTK
2 = ACGIH A1	7 = TSCA 5e	12 = CA RTK	17 = NJ RTK
3 = ACGIH A2	8 = TSCA 6	13 = IL RTK	18 = PA RTK
4 = OSHA Z	9 = TSCA 12b	14 = LA RTK	19 = RI RTK
5 = TSCA 4	10 = CA P65 CARC	15 = MI 293	

Code key: CARC=Carcinogen; REPRO=Reproductive

SECTION 16 OTHER INFORMATION

N/D = Not determined, N/A = Not applicable

THIS SAFETY DATA SHEET CONTAINS THE FOLLOWING REVISIONS:
Revision Changes:
Section 09: Phys/Chem Properties Note was modified.
Section 09: Boiling Point C(F) was modified.
Section 08: Comply with applicable regulations phrase was modified.
Section 09: Vapor Pressure was modified.
Section 09: Relative Density - Header was modified.
Section 09: Flash Point C(F) was modified.
Section 09: Viscosity was modified.
Section 09: Viscosity was modified.
Section 15: List Citations Table was modified.
Section 15: National Chemical Inventory Listing was modified.
Composition: Concentration Footnote was modified.
Section 08: Exposure Limits Table was modified.
Composition: Primary Ingredient Name was added.
Composition: CAS Number was added.
Composition: Concentration - Header was added.
Composition: Constituents Table - Header was added.
Composition: Component table was added.

PRECAUTIONARY LABEL TEXT:
Contains: DISTILLATES (PETROLEUM), HYDROTREATED LIGHT
CAUTION!
HEALTH HAZARDS
Repeated exposure may cause skin dryness or cracking. If swallowed, may be aspirated and cause lung damage.
PHYSICAL HAZARDS
Combustible. Material can accumulate static charges which may cause an ignition.

PRECAUTIONS
Avoid contact with skin. Use proper bonding and/or ground procedures. However, bonding and grounds may not eliminate the hazard from static accumulation.

FIRST AID
Inhalation: Remove from further exposure. For those providing assistance, avoid exposure to yourself or others. Use adequate respiratory protection. If respiratory irritation, dizziness, nausea, or unconsciousness occurs, seek immediate medical assistance. If breathing has stopped, assist ventilation with a mechanical device or use mouth-to-mouth resuscitation.

Eye: Flush thoroughly with water. If irritation occurs, get medical assistance.

Oral: Seek immediate medical attention. Do not induce vomiting.

Skin: Wash contact areas with soap and water. Remove contaminated clothing. Launder contaminated clothing before reuse.

FIRE FIGHTING MEDIA

Use water fog, foam, dry chemical or carbon dioxide (CO_2) to extinguish flames.

SPILL/LEAK

Land Spill: Eliminate all ignition sources (no smoking, flares, sparks or flames in immediate area). Stop leak if you can do it without risk. Prevent entry into waterways, sewer, basements or confined areas. A vapor suppressing foam may be used to reduce vapors. Absorb or cover with dry earth, sand or other non-combustible material and transfer to containers.

Water Spill: Stop leak if you can do it without risk. Eliminate sources of ignition. Warn other shipping. Report spills as required to appropriate authorities. If the Flash Point exceeds the Ambient Temperature by 10 degrees C or more, use containment booms and remove from the surface by skimming or with suitable absorbents when conditions permit. If the Flash Point does not exceed the Ambient Air Temperature by at least 10C, use booms as a barrier to protect shorelines and allow material to evaporate. Seek the advice of a specialist before using dispersants.

The information and recommendations contained herein are, to the best of ExxonMobil's knowledge and belief, accurate and reliable as of the date issued. You can contact ExxonMobil to insure that this document is the most current available from ExxonMobil. The information and recommendations are offered for the user's consideration and examination. It is the user's responsibility to satisfy itself that the product is suitable for the intended use. If buyer repackages this product, it is the user's responsibility to insure proper health, safety and other necessary information is included with and/or on the container. Appropriate warnings and safe-handling procedures should be provided to handlers and users. Alteration of this document is strictly prohibited. Except to the extent required by law, re-publication or retransmission of this document, in whole or in part, is not permitted. The term, "ExxonMobil" is used for convenience, and may include any one or more of ExxonMobil Chemical Company, Exxon Mobil Corporation, or any affiliates in which they directly or indirectly hold any interest.

Internal Use Only
MHC: 1A, 0, 1, 0, 2, 0

DGN: 4400252HUS (1007642)

Copyright 2002 Exxon Mobil Corporation, All rights reserved

MATERIAL SAFETY DATA SHEET

SECTION 1 PRODUCT AND COMPANY IDENTIFICATION

PRODUCT

Product Name: **MOBIL DELVAC ELITE 15W-40**
Product Description: Base Oil and Additives
Product Code: 201520508530, 444604-00, 97AJ90
Intended Use: Engine oil

COMPANY IDENTIFICATION

Supplier: **EXXON MOBIL CORPORATION**
3225 GALLOWS RD.
FAIRFAX, VA. 22037 USA

24 Hour Health Emergency	609-737-4411
Transportation Emergency Phone	800-424-9300
ExxonMobil Transportation No.	281-834-3296
Product Technical Information	800-662-4525, 800-947-9147
MSDS Internet Address	http://www.exxon.com, http://www.mobil.com

SECTION 2 COMPOSITION / INFORMATION ON INGREDIENTS

Reportable Hazardous Substance(s) or Complex Substance(s)

Name	CAS#	Concentration*
ZINC DITHIOPHOSPHATE	68649-42-3	< 2.5%

* All concentrations are percent by weight unless material is a gas. Gas concentrations are in percent by volume.

SECTION 3 HAZARDS IDENTIFICATION

This material is not considered to be hazardous according to regulatory guidelines (see (M)SDS Section 15).

POTENTIAL HEALTH EFFECTS

Low order of toxicity. Excessive exposure may result in eye, skin, or respiratory irritation. High-pressure injection under skin may cause serious damage.

NFPA Hazard ID:	Health: 0	Flammability: 1	Reactivity: 0
HMIS Hazard ID:	Health: 0	Flammability: 1	Reactivity: 0

NOTE: This material should not be used for any other purpose than the intended use in Section 1 without expert advice. Health studies have shown that chemical exposure may cause potential human health risks which may vary from person to person.

SECTION 4 FIRST AID MEASURES

INHALATION

Remove from further exposure. For those providing assistance, avoid exposure to yourself or others. Use adequate respiratory protection. If respiratory irritation, dizziness, nausea, or unconsciousness occurs, seek immediate medical assistance. If breathing has stopped, assist ventilation with a mechanical device or use mouth-to-mouth resuscitation.

SKIN CONTACT

Wash contact areas with soap and water. If product is injected into or under the skin, or into any part of the body, regardless of the appearance of the wound or its size, the individual should be evaluated immediately by a physician as a surgical emergency. Even though initial symptoms from high pressure injection may be minimal or absent, early surgical treatment within the first few hours may significantly reduce the ultimate extent of injury.

EYE CONTACT

Flush thoroughly with water. If irritation occurs, get medical assistance.

INGESTION

First aid is normally not required. Seek medical attention if discomfort occurs.

SECTION 5 FIRE FIGHTING MEASURES

EXTINGUISHING MEDIA

Appropriate Extinguishing Media: Use water fog, foam, dry chemical or carbon dioxide (CO2) to extinguish flames.

Inappropriate Extinguishing Media: Straight Streams of Water

FIRE FIGHTING

Fire Fighting Instructions: Evacuate area. Prevent runoff from fire control or dilution from entering streams, sewers, or drinking water supply. Firefighters should use standard protective equipment and in enclosed spaces, self-contained breathing apparatus (SCBA). Use water spray to cool fire exposed surfaces and to protect personnel.

Hazardous Combustion Products: Smoke, Fume, Aldehydes, Sulfur oxides, Incomplete combustion products, Oxides of carbon

FLAMMABILITY PROPERTIES

Flash Point [Method]: >215°C (419°F) [ASTM D-92]
Flammable Limits (Approximate volume % in air): LEL: 0.9 UEL: 7.0
Autoignition Temperature: N/D

SECTION 6 ACCIDENTAL RELEASE MEASURES

NOTIFICATION PROCEDURES

In the event of a spill or accidental release, notify relevant authorities in accordance with all applicable

regulations. US regulations require reporting releases of this material to the environment which exceed the applicable reportable quantity or oil spills which could reach any waterway including intermittent dry creeks. The National Response Center can be reached at (800)424-8802.

PROTECTIVE MEASURES

Avoid contact with spilled material. See Section 5 for fire fighting information. See the Hazard Identification Section for Significant Hazards. See Section 4 for First Aid Advice. See Section 8 for advice on the minimum requirements for personal protective equipment. Additional protective measures may be necessary, depending on the specific circumstances and/or the expert judgment of the emergency responders. For emergency responders: Respiratory protection: respiratory protection will be necessary only in special cases, e.g., formation of mists. Half-face or full-face respirator with filter(s) for dust/organic vapor or Self Contained Breathing Apparatus (SCBA) can be used depending on the size of spill and potential level of exposure. If the exposure cannot be completely characterized or an oxygen deficient atmosphere is possible or anticipated, SCBA is recommended. Work gloves that are resistant to hydrocarbons are recommended. Gloves made of polyvinyl acetate (PVA) are not water-resistant and are not suitable for emergency use. Chemical goggles are recommended if splashes or contact with eyes is possible. Small spills: normal antistatic work clothes are usually adequate. Large spills: full body suit of chemical resistant, antistatic material is recommended.

SPILL MANAGEMENT

Land Spill: Stop leak if you can do it without risk. Recover by pumping or with suitable absorbent.

Water Spill: Stop leak if you can do it without risk. Confine the spill immediately with booms. Warn other shipping. Remove from the surface by skimming or with suitable absorbents. Seek the advice of a specialist before using dispersants.

Water spill and land spill recommendations are based on the most likely spill scenario for this material; however, geographic conditions, wind, temperature, (and in the case of a water spill) wave and current direction and speed may greatly influence the appropriate action to be taken. For this reason, local experts should be consulted. Note: Local regulations may prescribe or limit action to be taken.

ENVIRONMENTAL PRECAUTIONS

Large Spills: Dike far ahead of liquid spill for later recovery and disposal. Prevent entry into waterways, sewers, basements or confined areas.

SECTION 7 HANDLING AND STORAGE

HANDLING

Avoid contact with used product. Prevent small spills and leakage to avoid slip hazard. Material can accumulate static charges which may cause an electrical spark (ignition source). When the material is handled in bulk, an electrical spark could ignite any flammable vapors from liquids or residues that may be present (e.g., during switch-loading operations). Use proper bonding and/or ground procedures. However, bonding and grounds may not eliminate the hazard from static accumulation. Consult local applicable standards for guidance. Additional references include American Petroleum Institute 2003 (Protection Against Ignitions Arising out of Static, Lightning and Stray Currents) or National Fire Protection Agency 77 (Recommended Practice on Static Electricity) or CENELEC CLC/TR 50404 (Electrostatics - Code of practice for the avoidance of hazards due to static electricity).

Static Accumulator: This material is a static accumulator.

STORAGE

The container choice, for example storage vessel, may effect static accumulation and dissipation. Do not store

in open or unlabelled containers.

SECTION 8 EXPOSURE CONTROLS / PERSONAL PROTECTION

EXPOSURE LIMIT VALUES

Exposure limits/standards for materials that can be formed when handling this product: When mists/aerosols can occur the following are recommended: 5 mg/m³ - ACGIH TLV (inhalable fraction), 5 mg/m³ - OSHA PEL.

NOTE: Limits/standards shown for guidance only. Follow applicable regulations.

ENGINEERING CONTROLS

The level of protection and types of controls necessary will vary depending upon potential exposure conditions. Control measures to consider:
No special requirements under ordinary conditions of use and with adequate ventilation.

PERSONAL PROTECTION

Personal protective equipment selections vary based on potential exposure conditions such as applications, handling practices, concentration and ventilation. Information on the selection of protective equipment for use with this material, as provided below, is based upon intended, normal usage.

Respiratory Protection: If engineering controls do not maintain airborne contaminant concentrations at a level which is adequate to protect worker health, an approved respirator may be appropriate. Respirator selection, use, and maintenance must be in accordance with regulatory requirements, if applicable. Types of respirators to be considered for this material include:
No special requirements under ordinary conditions of use and with adequate ventilation.

For high airborne concentrations, use an approved supplied-air respirator, operated in positive pressure mode. Supplied air respirators with an escape bottle may be appropriate when oxygen levels are inadequate, gas/vapor warning properties are poor, or if air purifying filter capacity/rating may be exceeded.

Hand Protection: Any specific glove information provided is based on published literature and glove manufacturer data. Glove suitability and breakthrough time will differ depending on the specific use conditions. Contact the glove manufacturer for specific advice on glove selection and breakthrough times for your use conditions. Inspect and replace worn or damaged gloves. The types of gloves to be considered for this material include:
No protection is ordinarily required under normal conditions of use.

Eye Protection: If contact is likely, safety glasses with side shields are recommended.

Skin and Body Protection: Any specific clothing information provided is based on published literature or manufacturer data. The types of clothing to be considered for this material include:
No skin protection is ordinarily required under normal conditions of use. In accordance with good industrial hygiene practices, precautions should be taken to avoid skin contact.

Specific Hygiene Measures: Always observe good personal hygiene measures, such as washing after handling the material and before eating, drinking, and/or smoking. Routinely wash work clothing and protective

equipment to remove contaminants. Discard contaminated clothing and footwear that cannot be cleaned. Practice good housekeeping.

ENVIRONMENTAL CONTROLS

Comply with applicable environmental regulations limiting discharge to air, water and soil. Protect the environment by applying appropriate control measures to prevent or limit emissions.

SECTION 9 PHYSICAL AND CHEMICAL PROPERTIES

Note: Physical and chemical properties are provided for safety, health and environmental considerations only and may not fully represent product specifications. Contact the Supplier for additional information.

GENERAL INFORMATION

Physical State: Liquid
Color: Amber
Odor: Characteristic
Odor Threshold: N/D

IMPORTANT HEALTH, SAFETY, AND ENVIRONMENTAL INFORMATION

Relative Density (at 15 °C): 0.875
Flash Point [Method]: >215°C (419°F) [ASTM D-92]
Flammable Limits (Approximate volume % in air): LEL: 0.9 UEL: 7.0
Autoignition Temperature: N/D
Boiling Point / Range: > 316°C (600°F) [Estimated]
Vapor Density (Air = 1): N/D
Vapor Pressure: < 0.013 kPa (0.1 mm Hg) at 20 °C [Estimated]
Evaporation Rate (n-butyl acetate = 1): N/D
pH: N/A
Log Pow (n-Octanol/Water Partition Coefficient): > 3.5 [Estimated]
Solubility in Water: Negligible
Viscosity: 111 cSt (111 mm2/sec) at 40 °C | 15 cSt (15 mm2/sec) at 100°C
Oxidizing Properties: See Hazards Identification Section.

OTHER INFORMATION

Freezing Point: N/D
Melting Point: N/A
Pour Point: -27°C (-17°F)
DMSO Extract (mineral oil only), IP-346: < 3 %wt
Decomposition Temperature: N/D

SECTION 10 STABILITY AND REACTIVITY

STABILITY: Material is stable under normal conditions.

CONDITIONS TO AVOID: Excessive heat. High energy sources of ignition.

MATERIALS TO AVOID: Strong oxidizers

HAZARDOUS DECOMPOSITION PRODUCTS: Material does not decompose at ambient temperatures.

HAZARDOUS POLYMERIZATION: Will not occur.

SECTION 11 TOXICOLOGICAL INFORMATION

ACUTE TOXICITY

Route of Exposure	Conclusion / Remarks
Inhalation	
Toxicity (Rat): LC50 > 5000 mg/m3	Minimally Toxic. Based on test data for structurally similar materials.
Irritation: No end point data.	Negligible hazard at ambient/normal handling temperatures. Based on assessment of the components.
Ingestion	
Toxicity (Rat): LD50 > 5000 mg/kg	Minimally Toxic. Based on test data for structurally similar materials.
Skin	
Toxicity (Rabbit): LD50 > 5000 mg/kg	Minimally Toxic. Based on test data for structurally similar materials.
Irritation (Rabbit): Data available.	Negligible irritation to skin at ambient temperatures. Based on test data for structurally similar materials.
Eye	
Irritation (Rabbit): Data available.	May cause mild, short-lasting discomfort to eyes. Based on test data for structurally similar materials.

CHRONIC/OTHER EFFECTS

For the product itself:

Diesel engine oils: Not carcinogenic in animals tests. Used and unused diesel engine oils did not produce any carcinogenic effects in chronic mouse skin painting studies.
Oils that are used in gasoline engines may become hazardous and display the following properties: Carcinogenic in animal tests. Caused mutations in vitro. Possible allergen and photoallergen. Contains polycyclic aromatic compounds (PAC) from combustion products of gasoline and/or thermal degradation products.

Contains:

Base oil severely refined: Not carcinogenic in animal studies. Representative material passes IP-346, Modified Ames test, and/or other screening tests. Dermal and inhalation studies showed minimal effects; lung non-specific infiltration of immune cells, oil deposition and minimal granuloma formation. Not sensitizing in test animals.

Additional information is available by request.

The following ingredients are cited on the lists below: None.

--REGULATORY LISTS SEARCHED--

1 = NTP CARC	3 = IARC 1	5 = IARC 2B
2 = NTP SUS	4 = IARC 2A	6 = OSHA CARC

SECTION 12 ECOLOGICAL INFORMATION

The information given is based on data available for the material, the components of the material, and similar materials.

ECOTOXICITY

Material -- Not expected to be harmful to aquatic organisms.

MOBILITY

Base oil component -- Low solubility and floats and is expected to migrate from water to the land. Expected to partition to sediment and wastewater solids.

PERSISTENCE AND DEGRADABILITY

Biodegradation:

Base oil component -- Expected to be inherently biodegradable

BIOACCUMULATION POTENTIAL

Base oil component -- Has the potential to bioaccumulate, however metabolism or physical properties may reduce the bioconcentration or limit bioavailability.

SECTION 13 DISPOSAL CONSIDERATIONS

Disposal recommendations based on material as supplied. Disposal must be in accordance with current applicable laws and regulations, and material characteristics at time of disposal.

DISPOSAL RECOMMENDATIONS

Product is suitable for burning in an enclosed controlled burner for fuel value or disposal by supervised incineration at very high temperatures to prevent formation of undesirable combustion products. Protect the environment. Dispose of used oil at designated sites. Minimize skin contact. Do not mix used oils with solvents, brake fluids or coolants.

REGULATORY DISPOSAL INFORMATION

RCRA Information: The unused product, in our opinion, is not specifically listed by the EPA as a hazardous waste (40 CFR, Part 261D), nor is it formulated to contain materials which are listed as hazardous wastes. It does not exhibit the hazardous characteristics of ignitability, corrositivity or reactivity and is not formulated with contaminants as determined by the Toxicity Characteristic Leaching Procedure (TCLP). However, used product may be regulated.

Empty Container Warning Empty Container Warning (where applicable): Empty containers may contain residue and can be dangerous. Do not attempt to refill or clean containers without proper instructions. Empty drums should be completely drained and safely stored until appropriately reconditioned or disposed. Empty containers should be taken for recycling, recovery, or disposal through suitably qualified or licensed contractor and in accordance with governmental regulations. DO NOT PRESSURISE, CUT, WELD, BRAZE, SOLDER, DRILL, GRIND, OR EXPOSE SUCH CONTAINERS TO HEAT, FLAME, SPARKS, STATIC ELECTRICITY, OR OTHER SOURCES OF IGNITION. THEY MAY EXPLODE AND CAUSE INJURY OR DEATH.

SECTION 14 TRANSPORT INFORMATION

LAND (DOT): Not Regulated for Land Transport

LAND (TDG): Not Regulated for Land Transport

SEA (IMDG): Not Regulated for Sea Transport according to IMDG-Code

AIR (IATA): Not Regulated for Air Transport

SECTION 15 REGULATORY INFORMATION

OSHA HAZARD COMMUNICATION STANDARD: When used for its intended purposes, this material is not classified as hazardous in accordance with OSHA 29 CFR 1910.1200.

Complies with the following national/regional chemical inventory requirements:: KECI, TSCA, DSL
Special Cases:

Inventory	Status
AICS	Restrictions Apply
ELINCS	Restrictions Apply
IECSC	Restrictions Apply

EPCRA: This material contains no extremely hazardous substances.

SARA (311/312) REPORTABLE HAZARD CATEGORIES: None.

SARA (313) TOXIC RELEASE INVENTORY:

Chemical Name	CAS Number	Typical Value
ZINC DITHIOPHOSPHATE	68649-42-3	< 2.5%

The following ingredients are cited on the lists below:

Chemical Name	CAS Number	List Citations
ZINC DITHIOPHOSPHATE	68649-42-3	13, 15, 17

--REGULATORY LISTS SEARCHED--

1 = ACGIH ALL	6 = TSCA 5a2	11 = CA P65 REPRO	16 = MN RTK
2 = ACGIH A1	7 = TSCA 5e	12 = CA RTK	17 = NJ RTK
3 = ACGIH A2	8 = TSCA 6	13 = IL RTK	18 = PA RTK
4 = OSHA Z	9 = TSCA 12b	14 = LA RTK	19 = RI RTK
5 = TSCA 4	10 = CA P65 CARC	15 = MI 293	

Code key: CARC=Carcinogen; REPRO=Reproductive

SECTION 16 OTHER INFORMATION

N/D = Not determined, N/A = Not applicable

THIS SAFETY DATA SHEET CONTAINS THE FOLLOWING REVISIONS:
Revision Changes:
Section 06: Notification Procedures - Header was modified.
Section 13: Disposal Considerations - Disposal Recommendations was modified.
Section 01: Product Code was modified.
Section 10 Stability and Reactivity - Header was modified.
Section 13: Disposal Recommendations - Note was modified.
Section 13: Empty Container Warning was modified.
Section 09: Phys/Chem Properties Note was modified.
Section 09: Boiling Point C(F) was modified.
Section 09: n-Octanol/Water Partition Coefficient was modified.
Section 08: Comply with applicable regulations phrase was modified.
Section 08: Personal Protection was modified.
Section 08: Hand Protection was modified.
Section 09: Vapor Pressure was modified.
Section 07: Handling and Storage - Handling was modified.
Section 07: Handling and Storage - Storage Phrases was modified.
Section 11: Dermal Lethality Test Data was modified.
Section 11: Oral Lethality Test Data was modified.
Section 05: Hazardous Combustion Products was modified.
Section 06: Accidental Release - Spill Management - Water was modified.
Section 09: Relative Density - Header was modified.
Section 09: Flash Point C(F) was modified.
Section 09: Viscosity was modified.
Section 09: Viscosity was modified.
Section 14: Sea (IMDG) - Header was modified.
Section 14: Air (IATA) - Header was modified.
Section 14: LAND (TDG) - Header was modified.
Section 14: LAND (DOT) - Header was modified.
Section 15: List Citations Table was modified.
Section 15: List Citation Table - Header was modified.
Section 14: LAND (DOT) - Default was modified.
Section 14: LAND (TDG) Default was modified.
Section 14: Sea (IMDG) - Default was modified.
Section 14: Air (IATA) - Default was modified.
Section 15: National Chemical Inventory Listing - Header was modified.
Section 15: National Chemical Inventory Listing was modified.
Section 16: Code to MHCs was modified.
Section 08: Exposure limits/standards was modified.
Section 15: Special Cases Table was modified.
Hazard Identification: OSHA - May be Hazardous Statement was modified.
Section 06: Notification Procedures was modified.
Section 09: Oxidizing Properties was modified.
Section 01: Company Contact Methods Sorted by Priority was modified.
Section 06: Protective Measures was added.
Section 06: Accidental Release - Protective Measures - Header was added.
Section 09: Decomposition Temperature was added.
Section 09: Decomposition Temp - Header was added.
Section 09: Vapor Pressure was added.

The information and recommendations contained herein are, to the best of ExxonMobil's knowledge and belief, accurate and reliable as of the date issued. You can contact ExxonMobil to insure that this document is the most current available from ExxonMobil. The information and recommendations are offered for the user's consideration and examination. It is the user's responsibility to satisfy itself that the product is suitable for the intended use. If buyer repackages this product, it is the user's responsibility to insure proper health, safety and other necessary information is included with and/or on the container. Appropriate warnings and safe-handling procedures should be provided to handlers and users. Alteration of this document is strictly prohibited. Except to the extent required by law, re-publication or retransmission of this document, in whole or in part, is not permitted. The term, "ExxonMobil" is used for convenience, and may include any one or more of ExxonMobil Chemical Company, Exxon Mobil Corporation, or any affiliates in which they directly or indirectly hold any interest.

Internal Use Only
MHC: 0B, 0B, 0, 0, 0, 0 PPEC: A

DGN: 7082558XUS (1013321)

Copyright 2002 Exxon Mobil Corporation, All rights reserved

MATERIAL SAFETY DATA SHEET

SECTION 1 PRODUCT AND COMPANY IDENTIFICATION

PRODUCT

Product Name: **MOBIL DELVAC EXTENDED LIFE 50/50 PREDILUTED COOLANT/ANTIFREEZE**
Product Description: Glycol
Product Code: 351010101596, 840439-00, 97AA97
Intended Use: Antifreeze/coolant

COMPANY IDENTIFICATION

Supplier: **EXXON MOBIL CORPORATION**
3225 GALLOWS RD.
FAIRFAX, VA. 22037 USA

24 Hour Health Emergency	609-737-4411
Transportation Emergency Phone	800-424-9300
ExxonMobil Transportation No.	281-834-3296
Product Technical Information	800-662-4525, 800-947-9147
MSDS Internet Address	http://www.exxon.com, http://www.mobil.com

SECTION 2 COMPOSITION / INFORMATION ON INGREDIENTS

Reportable Hazardous Substance(s) or Complex Substance(s)

Name	CAS#	Concentration*
DIETHYLENE GLYCOL	111-46-6	1 - 5%
ETHYLENE GLYCOL	107-21-1	40 - 50%
INORGANIC SALTS AND ORGANIC ACID SALTS		< 2%

* All concentrations are percent by weight unless material is a gas. Gas concentrations are in percent by volume.

SECTION 3 HAZARDS IDENTIFICATION

This material is considered to be hazardous according to regulatory guidelines (see (M)SDS Section 15).

POTENTIAL HEALTH EFFECTS

May cause harm to the unborn child. Harmful or fatal if swallowed. Ingestion may cause serious adverse effects and may be fatal. May cause kidney failure and central nervous system effects. Prolonged exposure to elevated concentrations of mist or liquid may cause irritation of the skin, eyes, and respiratory tract. High-pressure injection under skin may cause serious damage.

Target Organs: Kidney | Reproductive system |

NFPA Hazard ID:	Health:	1	Flammability:	1	Reactivity:	0
HMIS Hazard ID:	Health:	2*	Flammability:	0	Reactivity:	0

NOTE: This material should not be used for any other purpose than the intended use in Section 1 without expert advice. Health studies have shown that chemical exposure may cause potential human health risks which may vary from person to person.

SECTION 4 FIRST AID MEASURES

INHALATION

Remove from further exposure. For those providing assistance, avoid exposure to yourself or others. Use adequate respiratory protection. If respiratory irritation, dizziness, nausea, or unconsciousness occurs, seek immediate medical assistance. If breathing has stopped, assist ventilation with a mechanical device or use mouth-to-mouth resuscitation.

SKIN CONTACT

Wash contact areas with soap and water. If product is injected into or under the skin, or into any part of the body, regardless of the appearance of the wound or its size, the individual should be evaluated immediately by a physician as a surgical emergency. Even though initial symptoms from high pressure injection may be minimal or absent, early surgical treatment within the first few hours may significantly reduce the ultimate extent of injury.

EYE CONTACT

Flush thoroughly with water. If irritation occurs, get medical assistance.

INGESTION

Seek immediate medical attention.

NOTE TO PHYSICIAN

This product contains ethylene glycol and/or diethylene glycol which, if ingested, are metabolized to toxic metabolites by the enzyme alcohol dehydrogenase, for which ethanol and 4-methylpyrazole {U.S. drug name Fomepizole, trade name Antizol} are antagonists. Administration of oral or intravenous ethanol or intravenous 4-methylpyrazole may arrest further metabolism of this material and thereby ameliorate the toxicity. Use of ethanol or 4-methylpyrazole does not affect toxic metabolites that are already present and is not a substitute for hemodialysis.

SECTION 5 FIRE FIGHTING MEASURES

EXTINGUISHING MEDIA

Appropriate Extinguishing Media: Use water fog, alcohol-resistant foam, dry chemical or carbon dioxide (CO_2) to extinguish flames.

Inappropriate Extinguishing Media: Straight Streams of Water or Regular Foam

FIRE FIGHTING

Fire Fighting Instructions: Material will not burn. Prevent runoff from fire control or dilution from entering streams, sewers, or drinking water supply.

Unusual Fire Hazards: Hazardous material. Firefighters should consider protective equipment indicated in Section 8.

Hazardous Combustion Products: Smoke, Fume, Aldehydes, Incomplete combustion products, Oxides of carbon

FLAMMABILITY PROPERTIES

Flash Point [Method]: N/A
Flammable Limits (Approximate volume % in air): LEL: N/D UEL: N/D
Autoignition Temperature: >371°C (700°F)

SECTION 6 ACCIDENTAL RELEASE MEASURES

NOTIFICATION PROCEDURES

In the event of a spill or accidental release, notify relevant authorities in accordance with all applicable regulations. US regulations require reporting releases of this material to the environment which exceed the applicable reportable quantity or oil spills which could reach any waterway including intermittent dry creeks. The National Response Center can be reached at (800)424-8802.

PROTECTIVE MEASURES

Avoid contact with spilled material. Warn or evacuate occupants in surrounding and downwind areas if required due to toxicity or flammability of the material. See Section 5 for fire fighting information. See the Hazard Identification Section for Significant Hazards. See Section 4 for First Aid Advice. See Section 8 for advice on the minimum requirements for personal protective equipment. Additional protective measures may be necessary, depending on the specific circumstances and/or the expert judgment of the emergency responders.

SPILL MANAGEMENT

Land Spill: Stop leak if you can do it without risk. Do not touch or walk through spilled material. Small Spills: Absorb with earth, sand or other non-combustible material and transfer to containers for later disposal. Recover by pumping or with suitable absorbent.

Water Spill: Stop leak if you can do it without risk. Consult an expert. Warn other shipping. Material will sink. Remove material, as much as possible, using mechanical equipment.

Water spill and land spill recommendations are based on the most likely spill scenario for this material; however, geographic conditions, wind, temperature, (and in the case of a water spill) wave and current direction and speed may greatly influence the appropriate action to be taken. For this reason, local experts should be consulted. Note: Local regulations may prescribe or limit action to be taken.

ENVIRONMENTAL PRECAUTIONS

Remove debris in path of spill and remove contaminated debris from shoreline and water surface and dispose of according to local regulations. Large Spills: Dike far ahead of liquid spill for later recovery and disposal. Prevent entry into waterways, sewers, basements or confined areas.

SECTION 7 HANDLING AND STORAGE

HANDLING

Avoid breathing mists or vapors. Avoid contact with skin. Prevent small spills and leakage to avoid slip hazard.

Static Accumulator: This material is not a static accumulator.

STORAGE

Do not store in open or unlabelled containers.

SECTION 8 EXPOSURE CONTROLS / PERSONAL PROTECTION

EXPOSURE LIMIT VALUES

Exposure limits/standards (Note: Exposure limits are not additive)

Source	Form	Limit / Standard			NOTE	Source
DIETHYLENE GLYCOL		TWA	10 mg/m3		N/A	AIHA WEEL
ETHYLENE GLYCOL	Aerosol.	Ceiling	100 mg/m3		N/A	ACGIH

NOTE: Limits/standards shown for guidance only. Follow applicable regulations.

ENGINEERING CONTROLS

The level of protection and types of controls necessary will vary depending upon potential exposure conditions. Control measures to consider:

No special requirements under ordinary conditions of use and with adequate ventilation.

PERSONAL PROTECTION

Personal protective equipment selections vary based on potential exposure conditions such as applications, handling practices, concentration and ventilation. Information on the selection of protective equipment for use with this material, as provided below, is based upon intended, normal usage.

Respiratory Protection: If engineering controls do not maintain airborne contaminant concentrations at a level which is adequate to protect worker health, an approved respirator may be appropriate. Respirator selection, use, and maintenance must be in accordance with regulatory requirements, if applicable. Types of respirators to be considered for this material include:

No protection is ordinarily required under normal conditions of use and with adequate ventilation.

For high airborne concentrations, use an approved supplied-air respirator, operated in positive pressure mode. Supplied air respirators with an escape bottle may be appropriate when oxygen levels are inadequate, gas/vapor warning properties are poor, or if air purifying filter capacity/rating may be exceeded.

Hand Protection: Any specific glove information provided is based on published literature and glove manufacturer data. Glove suitability and breakthrough time will differ depending on the specific use conditions. Contact the glove manufacturer for specific advice on glove selection and breakthrough times for your use

conditions. Inspect and replace worn or damaged gloves. The types of gloves to be considered for this material include:

If prolonged or repeated contact is likely, chemical resistant gloves are recommended. If contact with forearms is likely, wear gauntlet style gloves.

Eye Protection: If contact is likely, safety glasses with side shields are recommended.

Skin and Body Protection: Any specific clothing information provided is based on published literature or manufacturer data. The types of clothing to be considered for this material include:

If prolonged or repeated contact is likely, chemical, and oil resistant clothing is recommended.

Specific Hygiene Measures: Always observe good personal hygiene measures, such as washing after handling the material and before eating, drinking, and/or smoking. Routinely wash work clothing and protective equipment to remove contaminants. Discard contaminated clothing and footwear that cannot be cleaned. Practice good housekeeping.

ENVIRONMENTAL CONTROLS

See Sections 6, 7, 12, 13.

SECTION 9 PHYSICAL AND CHEMICAL PROPERTIES

Typical physical and chemical properties are given below. Consult the Supplier in Section 1 for additional data.

GENERAL INFORMATION

Physical State: Liquid
Color: Orange
Odor: Characteristic
Odor Threshold: N/D

IMPORTANT HEALTH, SAFETY, AND ENVIRONMENTAL INFORMATION

Relative Density (at 15 C): 1.07
Flash Point [Method]: N/A
Flammable Limits (Approximate volume % in air): LEL: N/D UEL: N/D
Autoignition Temperature: >371°C (700°F)
Boiling Point / Range: 106C (223F) - 108C (226F)
Vapor Density (Air = 1): 2.1 at 101 kPa [n-Butyl Acetate]
Vapor Pressure: < 0.013 kPa (0.1 mm Hg) at 20 C
Evaporation Rate (n-butyl acetate = 1): N/D
pH: 8.6
Log Pow (n-Octanol/Water Partition Coefficient): < 2
Solubility in Water: Complete
Viscosity: <15.6 cSt (15.6 mm2/sec) at 40 C
Oxidizing Properties: See Hazards Identification Section.

OTHER INFORMATION

Freezing Point: -37°C (-35°F)
Melting Point: N/D

SECTION 10 STABILITY AND REACTIVITY

STABILITY: Material is stable under normal conditions.

CONDITIONS TO AVOID: High energy sources of ignition.

MATERIALS TO AVOID: Strong oxidizers, Strong Acids

HAZARDOUS DECOMPOSITION PRODUCTS: Material does not decompose at ambient temperatures.

HAZARDOUS POLYMERIZATION: Will not occur.

SECTION 11 TOXICOLOGICAL INFORMATION

ACUTE TOXICITY

Route of Exposure	Conclusion / Remarks
Inhalation	
Toxicity (Rat): LC50 > 5000 mg/m3	Minimally Toxic. Based on test data for structurally similar materials.
Irritation: Data available.	Negligible hazard at ambient/normal handling temperatures. Based on test data for structurally similar materials.
Ingestion	
Toxicity (Human): LDLo 100 ml	Moderately toxic. Based on test data for structurally similar materials.
Skin	
Toxicity (Rabbit): LD50 > 2000 mg/kg	Minimally Toxic. Based on test data for structurally similar materials.
Irritation (Rabbit): Data available.	Negligible irritation to skin at ambient temperatures. Based on test data for structurally similar materials.
Eye	
Irritation (Rabbit): Data available.	May cause mild, short-lasting discomfort to eyes. Based on test data for structurally similar materials.

CHRONIC/OTHER EFFECTS

Contains:

DIETHYLENE GLYCOL (DEG): Orally, DEG is more toxic to humans than animal test data indicate. Probable lethal dose for an adult is about 50 ml (2 oz.), or 2 -3 swallows. Smaller amounts may cause kidney degeneration and failure. Benign urinary bladder tumors were observed in rats, no tumors were observed in mice.

ETHYLENE GLYCOL (EG): Repeated high oral exposure has caused kidney damage, neurological effects, degeneration of the liver and changes in blood chemistry and circulating blood cells in laboratory animals. Repeated overexposure has the potential to cause similar toxic effects in humans. EG causes developmental and reproductive effects at high dose levels in laboratory animals. The relevance of these findings to humans is uncertain.

Additional information is available by request.

The following ingredients are cited on the lists below: None.

--REGULATORY LISTS SEARCHED--

1 = NTP CARC 3 = IARC 1 5 = IARC 2B

2 = NTP SUS 4 = IARC 2A 6 = OSHA CARC

SECTION 12 ECOLOGICAL INFORMATION

The information given is based on data available for the material, the components of the material, and similar materials.

ECOTOXICITY

Material -- Not expected to be harmful to aquatic organisms.

MOBILITY

Material -- Expected to remain in water or migrate through soil.

PERSISTENCE AND DEGRADABILITY

Biodegradation:

Material -- Expected to be readily biodegradable.

Atmospheric Oxidation:

Material -- Expected to degrade rapidly in air

BIOACCUMULATION POTENTIAL

Material -- Potential to bioaccumulate is low.

SECTION 13 DISPOSAL CONSIDERATIONS

Disposal recommendations based on material as supplied. Disposal must be in accordance with current applicable laws and regulations, and material characteristics at time of disposal.

DISPOSAL RECOMMENDATIONS

Even though this product is biodegradable, it must not be indiscriminately discarded into the environment. Product is suitable for burning in an enclosed controlled burner for fuel value or disposal by supervised incineration at very high temperatures to prevent formation of undesirable combustion products.

REGULATORY DISPOSAL INFORMATION

RCRA Information: The unused product, in our opinion, is not specifically listed by the EPA as a hazardous waste (40 CFR, Part 261D), nor is it formulated to contain materials which are listed as hazardous wastes. It does not exhibit the hazardous characteristics of ignitability, corrosivity or reactivity and is not formulated with contaminants as determined by the Toxicity Characteristic Leaching Procedure (TCLP). However, used product may be regulated.

Empty Container Warning Empty Container Warning (where applicable): Empty containers may contain residue and can be dangerous. Do not attempt to refill or clean containers without proper instructions. Empty drums should be completely drained and safely stored until appropriately reconditioned or disposed. Empty containers should be taken for recycling, recovery, or disposal through suitably qualified or licensed contractor and in accordance with governmental regulations. DO NOT PRESSURISE, CUT, WELD, BRAZE, SOLDER, DRILL, GRIND, OR EXPOSE SUCH CONTAINERS TO HEAT, FLAME, SPARKS, STATIC ELECTRICITY, OR OTHER SOURCES OF IGNITION. THEY MAY EXPLODE AND CAUSE INJURY OR DEATH.

SECTION 14 TRANSPORT INFORMATION

LAND (DOT)

Proper Shipping Name: ENVIRONMENTALLY HAZARDOUS SUBSTANCES, LIQUID, N.O.S. (Ethylene Glycol)

Hazard Class & Division: 9

ID Number: 3082

Packing Group: III

Product RQ: 10638.3 LBS - ETHYLENE GLYCOL

ERG Number: 171

Label(s): 9

Transport Document Name: UN3082, ENVIRONMENTALLY HAZARDOUS SUBSTANCES, LIQUID, N.O.S. (Ethylene Glycol), 9, PG III, RQ

Footnote: This material is not regulated under 49 CFR when the quantity in a package is less than the Product RQ.

LAND (TDG): Not Regulated for Land Transport

SEA (IMDG): Not Regulated for Sea Transport according to IMDG-Code

AIR (IATA): Not Regulated for Air Transport

SECTION 15 REGULATORY INFORMATION

OSHA HAZARD COMMUNICATION STANDARD: When used for its intended purpose, this material is classified as hazardous in accordance with OSHA 29CFR 1910.1200.

Complies with the following national/regional chemical inventory requirements:: TSCA

EPCRA: This material contains no extremely hazardous substances.

CERCLA:

Chemical Name	CAS Number	Typical Value	Component RQ	Product RQ
ETHYLENE GLYCOL	107-21-1	40 - 50%	5000 LBS	10638.3 LBS

SARA (311/312) REPORTABLE HAZARD CATEGORIES: Immediate Health. Delayed Health.

SARA (313) TOXIC RELEASE INVENTORY:

Chemical Name	CAS Number	Typical Value
ETHYLENE GLYCOL	107-21-1	40 - 50%

The following ingredients are cited on the lists below:

Chemical Name	CAS Number	List Citations
DIETHYLENE GLYCOL	111-46-6	16, 19
ETHYLENE GLYCOL	107-21-1	1, 13, 16, 17, 18, 19

--REGULATORY LISTS SEARCHED--

1 = ACGIH ALL	6 = TSCA 5a2	11 = CA P65 REPRO	16 = MN RTK
2 = ACGIH A1	7 = TSCA 5e	12 = CA RTK	17 = NJ RTK
3 = ACGIH A2	8 = TSCA 6	13 = IL RTK	18 = PA RTK
4 = OSHA Z	9 = TSCA 12b	14 = LA RTK	19 = RI RTK
5 = TSCA 4	10 = CA P65 CARC	15 = MI 293	

Code key: CARC=Carcinogen; REPRO=Reproductive

SECTION 16 OTHER INFORMATION

N/D = Not determined, N/A = Not applicable

THIS SAFETY DATA SHEET CONTAINS THE FOLLOWING REVISIONS:

Revision Changes:
Section 04: First Aid Inhalation - Header was modified.
Section 04: First Aid Ingestion - Header was modified.
Section 06: Protective Measures was modified.
Section 09: Color was modified.
Section 09: Evaporation Rate - Header was modified.
Hazard Identification: Health Hazards was modified.
Hazard Identification: NFPA Flammability was modified.
Section 11: Inhalation Lethality Test Data was modified.
Section 09: Viscosity was modified.
Section 14: Product RQ was modified.
Hazard Identification: Health Hazards was modified.
Composition: Component table was modified.
Section 15: List Citations Table was modified.
Section 15: CERCLA Table was modified.
Section 15: National Chemical Inventory Listing - Header was modified.
Section 15: SARA (313) TOXIC RELEASE INVENTORY - Table was modified.
Section 16: NA Contains was modified.
Section 08: Exposure Limits Table was modified.

PRECAUTIONARY LABEL TEXT:

Contains: ETHYLENE GLYCOL

DANGER!

HEALTH HAZARDS

May cause harm to the unborn child. Harmful or fatal if swallowed.

Target Organs: Kidney | Reproductive system |

FIRST AID

Inhalation: Remove from further exposure. For those providing assistance, avoid exposure to yourself or others. Use adequate respiratory protection. If respiratory irritation, dizziness, nausea, or unconsciousness occurs, seek immediate medical assistance. If breathing has stopped, assist ventilation with a mechanical device or use mouth-to-mouth resuscitation.

Eye: Flush thoroughly with water. If irritation occurs, get medical assistance.

Oral: Seek immediate medical attention.

Skin: Wash contact areas with soap and water. If product is injected into or under the skin, or into any part of the body, regardless of the appearance of the wound or its size, the individual should be evaluated immediately by a physician as a surgical emergency. Even though initial symptoms from high pressure injection may be minimal or absent, early surgical treatment within the first few hours may significantly reduce the ultimate extent of injury.

FIRE FIGHTING MEDIA

Use water fog, alcohol-resistant foam, dry chemical or carbon dioxide (CO_2) to extinguish flames.

SPILL/LEAK

Land Spill: Stop leak if you can do it without risk. Small Spills: Absorb with earth, sand or other non-combustible material and transfer to containers for later disposal. Recover by pumping or with suitable absorbent. Do not touch or walk through spilled material.

Water Spill: Stop leak if you can do it without risk. Report spills as required to appropriate authorities. Material will sink. This product emulsifies, disperses or is miscible in water. Consult an expert.

The information and recommendations contained herein are, to the best of ExxonMobil's knowledge and belief, accurate and reliable as of the date issued. You can contact ExxonMobil to insure that this document is the most current available from ExxonMobil. The information and recommendations are offered for the user's consideration and examination. It is the user's responsibility to satisfy itself that the product is suitable for the intended use. If buyer repackages this product, it is the user's responsibility to insure proper health, safety and other necessary information is included with and/or on the container. Appropriate warnings and safe-handling procedures should be provided to handlers and users. Alteration of this document is strictly prohibited. Except to the extent required by law, re-publication or retransmission of this document, in whole or in part, is not permitted. The term, "ExxonMobil" is used for convenience, and may include any one or more of ExxonMobil Chemical Company, Exxon Mobil Corporation, or any affiliates in which they directly or indirectly hold any interest.

Internal Use Only
MHC: 2, 0, 0, 0, 0, 0 PPEC: C

DGN: 7074341XUS (1011503)

Copyright 2002 Exxon Mobil Corporation, All rights reserved

MATERIAL SAFETY DATA SHEET

SECTION 1 PRODUCT AND COMPANY IDENTIFICATION

PRODUCT

Product Name: **MOBILGREASE CM-P**
Product Description: Base Oil and Additives
Product Code: 2015A0106050, 530147-00
Intended Use: Grease

COMPANY IDENTIFICATION

Supplier: **EXXON MOBIL CORPORATION**
3225 GALLOWS RD.
FAIRFAX, VA. 22037 USA

24 Hour Health Emergency	609-737-4411
Transportation Emergency Phone	800-424-9300
ExxonMobil Transportation No.	281-834-3296
Product Technical Information	800-662-4525, 800-947-9147
MSDS Internet Address	http://www.exxon.com, http://www.mobil.com

SECTION 2 COMPOSITION / INFORMATION ON INGREDIENTS

Reportable Hazardous Substance(s) or Complex Substance(s)

Name	CAS#	Concentration*
MOLYBDENUM (IV) SULFIDE	1317-33-5	1 - 5%
PHOSPHORODITHOIC ACID, O,O-DI C1-14-ALKYL ESTERS, ZINC SALTS (2:1) (ZDDP)	68649-42-3	1 - 2.5%

* All concentrations are percent by weight unless material is a gas. Gas concentrations are in percent by volume.

SECTION 3 HAZARDS IDENTIFICATION

This material is not considered to be hazardous according to regulatory guidelines (see (M)SDS Section 15).

POTENTIAL HEALTH EFFECTS

Low order of toxicity. Excessive exposure may result in eye, skin, or respiratory irritation. High-pressure injection under skin may cause serious damage.

NFPA Hazard ID:	Health:	0	Flammability:	1	Reactivity:	0
HMIS Hazard ID:	Health:	0	Flammability:	1	Reactivity:	0

NOTE: This material should not be used for any other purpose than the intended use in Section 1 without expert advice. Health studies have shown that chemical exposure may cause potential human health risks which may vary from person to person.

SECTION 4 FIRST AID MEASURES

INHALATION
Under normal conditions of intended use, this material is not expected to be an inhalation hazard.

SKIN CONTACT
Wash contact areas with soap and water. If product is injected into or under the skin, or into any part of the body, regardless of the appearance of the wound or its size, the individual should be evaluated immediately by a physician as a surgical emergency. Even though initial symptoms from high pressure injection may be minimal or absent, early surgical treatment within the first few hours may significantly reduce the ultimate extent of injury.

EYE CONTACT
Flush thoroughly with water. If irritation occurs, get medical assistance.

INGESTION
First aid is normally not required. Seek medical attention if discomfort occurs.

SECTION 5 FIRE FIGHTING MEASURES

EXTINGUISHING MEDIA
Appropriate Extinguishing Media: Use water fog, foam, dry chemical or carbon dioxide (CO2) to extinguish flames.

Inappropriate Extinguishing Media: Straight Streams of Water

FIRE FIGHTING
Fire Fighting Instructions: Evacuate area. Prevent runoff from fire control or dilution from entering streams, sewers, or drinking water supply. Firefighters should use standard protective equipment and in enclosed spaces, self-contained breathing apparatus (SCBA). Use water spray to cool fire exposed surfaces and to protect personnel.

Hazardous Combustion Products: Smoke, Fume, Aldehydes, Sulfur oxides, Incomplete combustion products, Oxides of carbon

FLAMMABILITY PROPERTIES
Flash Point [Method]: >204C (400F) [EST. FOR OIL, ASTM D-92 (COC)]
Flammable Limits (Approximate volume % in air): LEL: N/D UEL: N/D
Autoignition Temperature: N/D

SECTION 6 ACCIDENTAL RELEASE MEASURES

NOTIFICATION PROCEDURES
In the event of a spill or accidental release, notify relevant authorities in accordance with all applicable regulations. US regulations require reporting releases of this material to the environment which exceed the applicable reportable quantity or oil spills which could reach any waterway including intermittent dry creeks. The

National Response Center can be reached at (800)424-8802.

PROTECTIVE MEASURES

Avoid contact with spilled material. See Section 5 for fire fighting information. See the Hazard Identification Section for Significant Hazards. See Section 4 for First Aid Advice. See Section 8 for advice on the minimum requirements for personal protective equipment. Additional protective measures may be necessary, depending on the specific circumstances and/or the expert judgment of the emergency responders. For emergency responders: Respiratory protection: respiratory protection will be necessary only in special cases, e.g., formation of mists. Half-face or full-face respirator with filter(s) for dust/organic vapor or Self Contained Breathing Apparatus (SCBA) can be used depending on the size of spill and potential level of exposure. If the exposure cannot be completely characterized or an oxygen deficient atmosphere is possible or anticipated, SCBA is recommended. Work gloves that are resistant to hydrocarbons are recommended. Gloves made of polyvinyl acetate (PVA) are not water-resistant and are not suitable for emergency use. Chemical goggles are recommended if splashes or contact with eyes is possible. Small spills: normal antistatic work clothes are usually adequate. Large spills: full body suit of chemical resistant, antistatic material is recommended.

SPILL MANAGEMENT

Land Spill: Scrape up spilled material with shovels into a suitable container for recycle or disposal.

Water Spill: Stop leak if you can do it without risk. Confine the spill immediately with booms. Warn other shipping. Skim from surface.

Water spill and land spill recommendations are based on the most likely spill scenario for this material; however, geographic conditions, wind, temperature, (and in the case of a water spill) wave and current direction and speed may greatly influence the appropriate action to be taken. For this reason, local experts should be consulted. Note: Local regulations may prescribe or limit action to be taken.

ENVIRONMENTAL PRECAUTIONS

Prevent entry into waterways, sewers, basements or confined areas.

SECTION 7 HANDLING AND STORAGE

HANDLING

Prevent small spills and leakage to avoid slip hazard.

Static Accumulator: This material is not a static accumulator.

STORAGE

Do not store in open or unlabelled containers.

SECTION 8 EXPOSURE CONTROLS / PERSONAL PROTECTION

EXPOSURE LIMIT VALUES

Exposure limits/standards (Note: Exposure limits are not additive)

Source	Form	Limit / Standard			NOTE	Source
MOLYBDENUM (IV) SULFIDE [as Mo]	Total dust.	TWA	15 mg/m3		N/A	OSHA Z1
MOLYBDENUM (IV) SULFIDE [as Mo]	Inhalable fraction.	TWA	10 mg/m3		N/A	ACGIH
MOLYBDENUM (IV) SULFIDE [as Mo]	Respirable	TWA	3 mg/m3		N/A	ACGIH

	fraction.					

NOTE: Limits/standards shown for guidance only. Follow applicable regulations.

ENGINEERING CONTROLS

The level of protection and types of controls necessary will vary depending upon potential exposure conditions. Control measures to consider:
No special requirements under ordinary conditions of use and with adequate ventilation.

PERSONAL PROTECTION

Personal protective equipment selections vary based on potential exposure conditions such as applications, handling practices, concentration and ventilation. Information on the selection of protective equipment for use with this material, as provided below, is based upon intended, normal usage.

Respiratory Protection: If engineering controls do not maintain airborne contaminant concentrations at a level which is adequate to protect worker health, an approved respirator may be appropriate. Respirator selection, use, and maintenance must be in accordance with regulatory requirements, if applicable. Types of respirators to be considered for this material include:
No protection is ordinarily required under normal conditions of use and with adequate ventilation.

For high airborne concentrations, use an approved supplied-air respirator, operated in positive pressure mode. Supplied air respirators with an escape bottle may be appropriate when oxygen levels are inadequate, gas/vapor warning properties are poor, or if air purifying filter capacity/rating may be exceeded.

Hand Protection: Any specific glove information provided is based on published literature and glove manufacturer data. Glove suitability and breakthrough time will differ depending on the specific use conditions. Contact the glove manufacturer for specific advice on glove selection and breakthrough times for your use conditions. Inspect and replace worn or damaged gloves. The types of gloves to be considered for this material include:
No protection is ordinarily required under normal conditions of use.

Eye Protection: If contact is likely, safety glasses with side shields are recommended.

Skin and Body Protection: Any specific clothing information provided is based on published literature or manufacturer data. The types of clothing to be considered for this material include:
No skin protection is ordinarily required under normal conditions of use. In accordance with good industrial hygiene practices, precautions should be taken to avoid skin contact.

Specific Hygiene Measures: Always observe good personal hygiene measures, such as washing after handling the material and before eating, drinking, and/or smoking. Routinely wash work clothing and protective equipment to remove contaminants. Discard contaminated clothing and footwear that cannot be cleaned. Practice good housekeeping.

ENVIRONMENTAL CONTROLS
See Sections 6, 7, 12, 13.

SECTION 9 PHYSICAL AND CHEMICAL PROPERTIES

Note: Physical and chemical properties are provided for safety, health and environmental considerations only and may not fully represent product specifications. Contact the Supplier for additional information.

GENERAL INFORMATION

Physical State: Solid
Form: Semi-fluid
Color: Gray
Odor: Characteristic
Odor Threshold: N/D

IMPORTANT HEALTH, SAFETY, AND ENVIRONMENTAL INFORMATION

Relative Density (at 15 C): 0.919
Flash Point [Method]: >204C (400F) [EST. FOR OIL, ASTM D-92 (COC)]
Flammable Limits (Approximate volume % in air): LEL: N/D UEL: N/D
Autoignition Temperature: N/D
Boiling Point / Range: > 316C (600F) [Estimated]
Vapor Density (Air = 1): N/D
Vapor Pressure: < 0.013 kPa (0.1 mm Hg) at 20 C [Estimated]
Evaporation Rate (n-butyl acetate = 1): N/D
pH: N/A
Log Pow (n-Octanol/Water Partition Coefficient): > 3.5 [Estimated]
Solubility in Water: Negligible
Viscosity: 320 cSt (320 mm2/sec) at 40 C
Oxidizing Properties: See Hazards Identification Section.

OTHER INFORMATION

Freezing Point: N/D
Melting Point: 260°C (500°F)
DMSO Extract (mineral oil only), IP-346: < 3 %wt
Decomposition Temperature: N/D

NOTE: Most physical properties above are for the oil component in the material.

SECTION 10 STABILITY AND REACTIVITY

STABILITY: Material is stable under normal conditions.

CONDITIONS TO AVOID: Excessive heat. High energy sources of ignition.

MATERIALS TO AVOID: Strong oxidizers

HAZARDOUS DECOMPOSITION PRODUCTS: Material does not decompose at ambient temperatures.

HAZARDOUS POLYMERIZATION: Will not occur.

SECTION 11 TOXICOLOGICAL INFORMATION

ACUTE TOXICITY

Route of Exposure	Conclusion / Remarks

Inhalation	
Toxicity: No end point data.	Minimally Toxic. Based on assessment of the components.
Irritation: No end point data.	Negligible hazard at ambient/normal handling temperatures. Based on assessment of the components.
Ingestion	
Toxicity (Rat): LD50 > 5000 mg/kg	Minimally Toxic. Based on test data for structurally similar materials.
Skin	
Toxicity (Rabbit): LD50 > 5000 mg/kg	Minimally Toxic. Based on test data for structurally similar materials.
Irritation (Rabbit): Data available.	Negligible irritation to skin at ambient temperatures. Based on assessment of the components.
Eye	
Irritation (Rabbit): Data available.	May cause mild, short-lasting discomfort to eyes. Based on assessment of the components.

CHRONIC/OTHER EFFECTS

Contains:

Base oil severely refined: Not carcinogenic in animal studies. Representative material passes IP-346, Modified Ames test, and/or other screening tests. Dermal and inhalation studies showed minimal effects; lung non-specific infiltration of immune cells, oil deposition and minimal granuloma formation. Not sensitizing in test animals.

Additional information is available by request.

The following ingredients are cited on the lists below: None.

--REGULATORY LISTS SEARCHED--

1 = NTP CARC	3 = IARC 1	5 = IARC 2B
2 = NTP SUS	4 = IARC 2A	6 = OSHA CARC

SECTION 12 ECOLOGICAL INFORMATION

The information given is based on data available for the material, the components of the material, and similar materials.

ECOTOXICITY

Material -- Not expected to be harmful to aquatic organisms.

MOBILITY

Base oil component -- Low solubility and floats and is expected to migrate from water to the land. Expected to partition to sediment and wastewater solids.

PERSISTENCE AND DEGRADABILITY

Biodegradation:

Base oil component -- Expected to be inherently biodegradable

BIOACCUMULATION POTENTIAL

Base oil component -- Has the potential to bioaccumulate, however metabolism or physical properties may reduce the bioconcentration or limit bioavailability.

OTHER ECOLOGICAL INFORMATION

VOC (EPA Method 24): 0.077 lbs/gal

SECTION 13 DISPOSAL CONSIDERATIONS

Disposal recommendations based on material as supplied. Disposal must be in accordance with current applicable laws and regulations, and material characteristics at time of disposal.

DISPOSAL RECOMMENDATIONS

Product is suitable for burning in an enclosed controlled burner for fuel value or disposal by supervised incineration at very high temperatures to prevent formation of undesirable combustion products.

REGULATORY DISPOSAL INFORMATION

RCRA Information: The unused product, in our opinion, is not specifically listed by the EPA as a hazardous waste (40 CFR, Part 261D), nor is it formulated to contain materials which are listed as hazardous wastes. It does not exhibit the hazardous characteristics of ignitability, corrositivity or reactivity and is not formulated with contaminants as determined by the Toxicity Characteristic Leaching Procedure (TCLP). However, used product may be regulated.

Empty Container Warning Empty Container Warning (where applicable): Empty containers may contain residue and can be dangerous. Do not attempt to refill or clean containers without proper instructions. Empty drums should be completely drained and safely stored until appropriately reconditioned or disposed. Empty containers should be taken for recycling, recovery, or disposal through suitably qualified or licensed contractor and in accordance with governmental regulations. DO NOT PRESSURISE, CUT, WELD, BRAZE, SOLDER, DRILL, GRIND, OR EXPOSE SUCH CONTAINERS TO HEAT, FLAME, SPARKS, STATIC ELECTRICITY, OR OTHER SOURCES OF IGNITION. THEY MAY EXPLODE AND CAUSE INJURY OR DEATH.

SECTION 14 TRANSPORT INFORMATION

LAND (DOT): Not Regulated for Land Transport

LAND (TDG): Not Regulated for Land Transport

SEA (IMDG): Not Regulated for Sea Transport according to IMDG-Code

AIR (IATA): Not Regulated for Air Transport

SECTION 15 REGULATORY INFORMATION

OSHA HAZARD COMMUNICATION STANDARD: When used for its intended purposes, this material is not classified as hazardous in accordance with OSHA 29 CFR 1910.1200.

Complies with the following national/regional chemical inventory requirements:: ENCS, AICS, TSCA, EINECS,

IECSC, DSL

EPCRA: This material contains no extremely hazardous substances.

SARA (311/312) REPORTABLE HAZARD CATEGORIES: None.

SARA (313) TOXIC RELEASE INVENTORY:

Chemical Name	CAS Number	Typical Value
PHOSPHORODITHOIC ACID, O,O-DI C1-14-ALKYL ESTERS, ZINC SALTS (2:1) (ZDDP)	68649-42-3	1 - 2.5%

The following ingredients are cited on the lists below:

Chemical Name	CAS Number	List Citations
HYDRO TREATED HEAVY NAPHTHENIC DISTILLATE	64742-52-5	13, 16, 17, 18, 19
HYDROTREATED LIGHT NAPHTHENIC DISTILLATE (PETROLEUM)	64742-53-6	16, 17
MOLYBDENUM (IV) SULFIDE	1317-33-5	1, 4, 13, 16, 19
PHOSPHORODITHOIC ACID, O,O-DI C1-14-ALKYL ESTERS, ZINC SALTS (2:1) (ZDDP)	68649-42-3	13, 15, 17
ZINC DINONYLNAPHTHALENE SULFONATE	28016-00-4	15

--REGULATORY LISTS SEARCHED--

1 = ACGIH ALL	6 = TSCA 5a2	11 = CA P65 REPRO	16 = MN RTK
2 = ACGIH A1	7 = TSCA 5e	12 = CA RTK	17 = NJ RTK
3 = ACGIH A2	8 = TSCA 6	13 = IL RTK	18 = PA RTK
4 = OSHA Z	9 = TSCA 12b	14 = LA RTK	19 = RI RTK
5 = TSCA 4	10 = CA P65 CARC	15 = MI 293	

Code key: CARC=Carcinogen; REPRO=Reproductive

SECTION 16 OTHER INFORMATION

N/D = Not determined, N/A = Not applicable

THIS SAFETY DATA SHEET CONTAINS THE FOLLOWING REVISIONS:
Revision Changes:
Section 04: First Aid Skin was modified.
Section 04: First Aid Inhalation was modified.
Section 06: Notification Procedures - Header was modified.

Section 01: Product Code was modified.
Section 10 Stability and Reactivity - Header was modified.
Section 13: Disposal Recommendations - Note was modified.
Section 13: Empty Container Warning was modified.
Section 09: Phys/Chem Properties Note was modified.
Section 09: Boiling Point C(F) was modified.
Section 09: n-Octanol/Water Partition Coefficient was modified.
Section 08: Personal Protection was modified.
Section 08: Hand Protection was modified.
Section 09: Vapor Pressure was modified.
Section 07: Handling and Storage - Handling was modified.
Section 11: Dermal Lethality Test Data was modified.
Section 11: Oral Lethality Test Data was modified.
Section 11: Inhalation Lethality Test Data was modified.
Section 05: Hazardous Combustion Products was modified.
Section 06: Accidental Release - Spill Management - Land was modified.
Section 06: Accidental Release - Spill Management - Water was modified.
Section 09: Relative Density - Header was modified.
Section 09: Flash Point C(F) was modified.
Section 09: Viscosity was modified.
Section 14: Sea (IMDG) - Header was modified.
Section 14: Air (IATA) - Header was modified.
Section 14: LAND (TDG) - Header was modified.
Section 14: LAND (DOT) - Header was modified.
Composition: Component table was modified.
Section 15: List Citations Table was modified.
Section 15: List Citation Table - Header was modified.
Section 14: LAND (DOT) - Default was modified.
Section 14: LAND (TDG) Default was modified.
Section 14: Sea (IMDG) - Default was modified.
Section 14: Air (IATA) - Default was modified.
Section 11: Skin Irritation Conclusion was modified.
Section 11: Inhalation Lethality Test Comment was modified.
Section 15: National Chemical Inventory Listing - Header was modified.
Section 15: SARA (313) TOXIC RELEASE INVENTORY - Table was modified.
Section 15: National Chemical Inventory Listing was modified.
Section 16: Code to MHCs was modified.
Section 08: Exposure limits/standards was modified.
Section 15: OSHA Hazard Communication Standard was modified.
Hazard Identification: OSHA - May be Hazardous Statement was modified.
Section 06: Notification Procedures was modified.
Section 08: Exposure Limits Table was modified.
Section 09: Oxidizing Properties was modified.
Section 08: OEL Table - Notation Column - Header was modified.
Section 08: Exposure Limit Values - Header was modified.
Section 01: Company Contact Methods Sorted by Priority was modified.
Section 06: Protective Measures was added.
Section 06: Accidental Release - Protective Measures - Header was added.
Section 09: Decomposition Temperature was added.
Section 09: Decomposition Temp - Header was added.
Section 09: Vapor Pressure was added.
Section 15: TSCA Class 2 Statement was deleted.

The information and recommendations contained herein are, to the best of ExxonMobil's knowledge and belief, accurate and reliable as of the date issued. You can contact ExxonMobil to insure that this document is the most current available from ExxonMobil. The information and recommendations are offered for the user's consideration and examination. It is the user's responsibility to satisfy itself that the product is suitable for the intended use. If buyer repackages this product, it is the user's responsibility to insure proper health, safety and other necessary information is included with and/or on the container. Appropriate warnings and safe-handling procedures should be provided to handlers and users. Alteration of this document is strictly prohibited. Except to the extent required by law, re-publication or retransmission of this document, in whole or in part, is not permitted. The term, "ExxonMobil" is used for convenience, and may include any one or more of ExxonMobil Chemical Company, Exxon Mobil Corporation, or any affiliates in which they directly or indirectly hold any interest.

Internal Use Only
MHC: 0B, 0B, 0, 0, 0, 0 PPEC: A

DGN: 2006083XUS (550247)

Copyright 2002 Exxon Mobil Corporation, All rights reserved

MATERIAL SAFETY DATA SHEET

SECTION 1 PRODUCT AND COMPANY IDENTIFICATION

PRODUCT

Product Name: **MOBILGREASE XHP 462**
Product Description: Base Oil and Additives
Product Code: 2015A0202527, 642538-00, 97AB14
Intended Use: Grease

COMPANY IDENTIFICATION

Supplier: **EXXON MOBIL CORPORATION**
3225 GALLOWS RD.
FAIRFAX, VA. 22037 USA

24 Hour Health Emergency	609-737-4411
Transportation Emergency Phone	800-424-9300
ExxonMobil Transportation No.	281-834-3296
Product Technical Information	800-662-4525, 800-947-9147
MSDS Internet Address	http://www.exxon.com, http://www.mobil.com

SECTION 2 COMPOSITION / INFORMATION ON INGREDIENTS

Reportable Hazardous Substance(s) or Complex Substance(s)

Name	CAS#	Concentration*
ZINC DITHIOPHOSPHATE	68649-42-3	1 - 2.5%

* All concentrations are percent by weight unless material is a gas. Gas concentrations are in percent by volume.

SECTION 3 HAZARDS IDENTIFICATION

This material is not considered to be hazardous according to regulatory guidelines (see (M)SDS Section 15).

POTENTIAL HEALTH EFFECTS

Low order of toxicity. Excessive exposure may result in eye, skin, or respiratory irritation. High-pressure injection under skin may cause serious damage.

NFPA Hazard ID:	Health: 0	Flammability: 1	Reactivity: 0
HMIS Hazard ID:	Health: 0	Flammability: 1	Reactivity: 0

NOTE: This material should not be used for any other purpose than the intended use in Section 1 without expert advice. Health studies have shown that chemical exposure may cause potential human health risks which may vary

from person to person.

SECTION 4 FIRST AID MEASURES

INHALATION

Under normal conditions of intended use, this material is not expected to be an inhalation hazard.

SKIN CONTACT

Wash contact areas with soap and water. If product is injected into or under the skin, or into any part of the body, regardless of the appearance of the wound or its size, the individual should be evaluated immediately by a physician as a surgical emergency. Even though initial symptoms from high pressure injection may be minimal or absent, early surgical treatment within the first few hours may significantly reduce the ultimate extent of injury.

EYE CONTACT

Flush thoroughly with water. If irritation occurs, get medical assistance.

INGESTION

First aid is normally not required. Seek medical attention if discomfort occurs.

SECTION 5 FIRE FIGHTING MEASURES

EXTINGUISHING MEDIA

Appropriate Extinguishing Media: Use water fog, foam, dry chemical or carbon dioxide (CO2) to extinguish flames.

Inappropriate Extinguishing Media: Straight Streams of Water

FIRE FIGHTING

Fire Fighting Instructions: Evacuate area. Prevent runoff from fire control or dilution from entering streams, sewers, or drinking water supply. Firefighters should use standard protective equipment and in enclosed spaces, self-contained breathing apparatus (SCBA). Use water spray to cool fire exposed surfaces and to protect personnel.

Hazardous Combustion Products: Smoke, Fume, Aldehydes, Sulfur oxides, Incomplete combustion products, Oxides of carbon

FLAMMABILITY PROPERTIES

Flash Point [Method]: >294C (561F) [EST. FOR OIL, ASTM D-92 (COC)]
Flammable Limits (Approximate volume % in air): LEL: N/D UEL: N/D
Autoignition Temperature: N/D

SECTION 6 ACCIDENTAL RELEASE MEASURES

NOTIFICATION PROCEDURES

In the event of a spill or accidental release, notify relevant authorities in accordance with all applicable

regulations. US regulations require reporting releases of this material to the environment which exceed the applicable reportable quantity or oil spills which could reach any waterway including intermittent dry creeks. The National Response Center can be reached at (800)424-8802.

PROTECTIVE MEASURES

Avoid contact with spilled material. See Section 5 for fire fighting information. See the Hazard Identification Section for Significant Hazards. See Section 4 for First Aid Advice. See Section 8 for advice on the minimum requirements for personal protective equipment. Additional protective measures may be necessary, depending on the specific circumstances and/or the expert judgment of the emergency responders. For emergency responders: Respiratory protection: respiratory protection will be necessary only in special cases, e.g., formation of mists. Half-face or full-face respirator with filter(s) for dust/organic vapor or Self Contained Breathing Apparatus (SCBA) can be used depending on the size of spill and potential level of exposure. If the exposure cannot be completely characterized or an oxygen deficient atmosphere is possible or anticipated, SCBA is recommended. Work gloves that are resistant to hydrocarbons are recommended. Gloves made of polyvinyl acetate (PVA) are not water-resistant and are not suitable for emergency use. Chemical goggles are recommended if splashes or contact with eyes is possible. Small spills: normal antistatic work clothes are usually adequate. Large spills: full body suit of chemical resistant, antistatic material is recommended.

SPILL MANAGEMENT

Land Spill: Scrape up spilled material with shovels into a suitable container for recycle or disposal.

Water Spill: Stop leak if you can do it without risk. Confine the spill immediately with booms. Warn other shipping. Skim from surface.

Water spill and land spill recommendations are based on the most likely spill scenario for this material; however, geographic conditions, wind, temperature, (and in the case of a water spill) wave and current direction and speed may greatly influence the appropriate action to be taken. For this reason, local experts should be consulted. Note: Local regulations may prescribe or limit action to be taken.

ENVIRONMENTAL PRECAUTIONS

Prevent entry into waterways, sewers, basements or confined areas.

SECTION 7 HANDLING AND STORAGE

HANDLING

Prevent small spills and leakage to avoid slip hazard.

Static Accumulator: This material is not a static accumulator.

STORAGE

Do not store in open or unlabelled containers.

SECTION 8 EXPOSURE CONTROLS / PERSONAL PROTECTION

EXPOSURE LIMIT VALUES

NOTE: Limits/standards shown for guidance only. Follow applicable regulations.

ENGINEERING CONTROLS

The level of protection and types of controls necessary will vary depending upon potential exposure conditions. Control measures to consider:
No special requirements under ordinary conditions of use and with adequate ventilation.

PERSONAL PROTECTION

Personal protective equipment selections vary based on potential exposure conditions such as applications, handling practices, concentration and ventilation. Information on the selection of protective equipment for use with this material, as provided below, is based upon intended, normal usage.

Respiratory Protection: If engineering controls do not maintain airborne contaminant concentrations at a level which is adequate to protect worker health, an approved respirator may be appropriate. Respirator selection, use, and maintenance must be in accordance with regulatory requirements, if applicable. Types of respirators to be considered for this material include:
No protection is ordinarily required under normal conditions of use and with adequate ventilation.

For high airborne concentrations, use an approved supplied-air respirator, operated in positive pressure mode. Supplied air respirators with an escape bottle may be appropriate when oxygen levels are inadequate, gas/vapor warning properties are poor, or if air purifying filter capacity/rating may be exceeded.

Hand Protection: Any specific glove information provided is based on published literature and glove manufacturer data. Glove suitability and breakthrough time will differ depending on the specific use conditions. Contact the glove manufacturer for specific advice on glove selection and breakthrough times for your use conditions. Inspect and replace worn or damaged gloves. The types of gloves to be considered for this material include:
No protection is ordinarily required under normal conditions of use.

Eye Protection: If contact is likely, safety glasses with side shields are recommended.

Skin and Body Protection: Any specific clothing information provided is based on published literature or manufacturer data. The types of clothing to be considered for this material include:
No skin protection is ordinarily required under normal conditions of use. In accordance with good industrial hygiene practices, precautions should be taken to avoid skin contact.

Specific Hygiene Measures: Always observe good personal hygiene measures, such as washing after handling the material and before eating, drinking, and/or smoking. Routinely wash work clothing and protective equipment to remove contaminants. Discard contaminated clothing and footwear that cannot be cleaned. Practice good housekeeping.

ENVIRONMENTAL CONTROLS

See Sections 6, 7, 12, 13.

SECTION 9 PHYSICAL AND CHEMICAL PROPERTIES

Note: Physical and chemical properties are provided for safety, health and environmental considerations only and may not fully represent product specifications. Contact the Supplier for additional information.

GENERAL INFORMATION

Physical State: Solid
Form: Semi-fluid
Color: Blue
Odor: Characteristic
Odor Threshold: N/D

IMPORTANT HEALTH, SAFETY, AND ENVIRONMENTAL INFORMATION

Relative Density (at 15 C): 0.9
Flash Point [Method]: >294C (561F) [EST. FOR OIL, ASTM D-92 (COC)]
Flammable Limits (Approximate volume % in air): LEL: N/D UEL: N/D
Autoignition Temperature: N/D
Boiling Point / Range: > 316C (600F) [Estimated]
Vapor Density (Air = 1): N/D
Vapor Pressure: < 0.013 kPa (0.1 mm Hg) at 20 C [Estimated]
Evaporation Rate (n-butyl acetate = 1): N/D
pH: N/A
Log Pow (n-Octanol/Water Partition Coefficient): > 3.5 [Estimated]
Solubility in Water: Negligible
Viscosity: 460 cSt (460 mm2/sec) at 40 C
Oxidizing Properties: See Hazards Identification Section.

OTHER INFORMATION

Freezing Point: N/D
Melting Point: N/D
DMSO Extract (mineral oil only), IP-346: < 3 %wt
Decomposition Temperature: N/D

NOTE: Most physical properties above are for the oil component in the material.

SECTION 10 STABILITY AND REACTIVITY

STABILITY: Material is stable under normal conditions.

CONDITIONS TO AVOID: Excessive heat. High energy sources of ignition.

MATERIALS TO AVOID: Strong oxidizers

HAZARDOUS DECOMPOSITION PRODUCTS: Material does not decompose at ambient temperatures.

HAZARDOUS POLYMERIZATION: Will not occur.

SECTION 11 TOXICOLOGICAL INFORMATION

ACUTE TOXICITY

Route of Exposure	Conclusion / Remarks
Inhalation	
Toxicity: No end point data.	Minimally Toxic. Based on assessment of the components.
Irritation: No end point data.	Negligible hazard at ambient/normal handling temperatures. Based on assessment of the components.
Ingestion	
Toxicity (Rat): LD50 > 5000 mg/kg	Minimally Toxic. Based on test data for structurally similar materials.
Skin	
Toxicity (Rabbit): LD50 > 5000 mg/kg	Minimally Toxic. Based on test data for structurally similar materials.
Irritation (Rabbit): Data available.	Negligible irritation to skin at ambient temperatures. Based on assessment of the components.
Eye	
Irritation (Rabbit): Data available.	May cause mild, short-lasting discomfort to eyes. Based on assessment of the components.

CHRONIC/OTHER EFFECTS

Contains:

Base oil severely refined: Not carcinogenic in animal studies. Representative material passes IP-346, Modified Ames test, and/or other screening tests. Dermal and inhalation studies showed minimal effects; lung non-specific infiltration of immune cells, oil deposition and minimal granuloma formation. Not sensitizing in test animals.

Additional information is available by request.

The following ingredients are cited on the lists below: None.

--REGULATORY LISTS SEARCHED--

1 = NTP CARC	3 = IARC 1	5 = IARC 2B
2 = NTP SUS	4 = IARC 2A	6 = OSHA CARC

SECTION 12 ECOLOGICAL INFORMATION

The information given is based on data available for the material, the components of the material, and similar materials.

ECOTOXICITY

Material -- Not expected to be harmful to aquatic organisms.

MOBILITY

Base oil component -- Low solubility and floats and is expected to migrate from water to the land. Expected to partition to sediment and wastewater solids.

PERSISTENCE AND DEGRADABILITY

Biodegradation:

Base oil component -- Expected to be inherently biodegradable

BIOACCUMULATION POTENTIAL

Base oil component -- Has the potential to bioaccumulate, however metabolism or physical properties may reduce the bioconcentration or limit bioavailability.

SECTION 13 DISPOSAL CONSIDERATIONS

Disposal recommendations based on material as supplied. Disposal must be in accordance with current applicable laws and regulations, and material characteristics at time of disposal.

DISPOSAL RECOMMENDATIONS

Product is suitable for burning in an enclosed controlled burner for fuel value or disposal by supervised incineration at very high temperatures to prevent formation of undesirable combustion products.

REGULATORY DISPOSAL INFORMATION

RCRA Information: The unused product, in our opinion, is not specifically listed by the EPA as a hazardous waste (40 CFR, Part 261D), nor is it formulated to contain materials which are listed as hazardous wastes. It does not exhibit the hazardous characteristics of ignitability, corrositivity or reactivity and is not formulated with contaminants as determined by the Toxicity Characteristic Leaching Procedure (TCLP). However, used product may be regulated.

Empty Container Warning Empty Container Warning (where applicable): Empty containers may contain residue and can be dangerous. Do not attempt to refill or clean containers without proper instructions. Empty drums should be completely drained and safely stored until appropriately reconditioned or disposed. Empty containers should be taken for recycling, recovery, or disposal through suitably qualified or licensed contractor and in accordance with governmental regulations. DO NOT PRESSURISE, CUT, WELD, BRAZE, SOLDER, DRILL, GRIND, OR EXPOSE SUCH CONTAINERS TO HEAT, FLAME, SPARKS, STATIC ELECTRICITY, OR OTHER SOURCES OF IGNITION. THEY MAY EXPLODE AND CAUSE INJURY OR DEATH.

SECTION 14 TRANSPORT INFORMATION

LAND (DOT): Not Regulated for Land Transport

LAND (TDG): Not Regulated for Land Transport

SEA (IMDG): Not Regulated for Sea Transport according to IMDG-Code

AIR (IATA): Not Regulated for Air Transport

SECTION 15 REGULATORY INFORMATION

OSHA HAZARD COMMUNICATION STANDARD: When used for its intended purposes, this material is not classified as hazardous in accordance with OSHA 29 CFR 1910.1200.

Complies with the following national/regional chemical inventory requirements:: PICCS, KECI, TSCA, AICS, EINECS, IECSC

Special Cases:

Inventory	Status
ENCS	Restrictions Apply
NDSL	Restrictions Apply

EPCRA: This material contains no extremely hazardous substances.

SARA (311/312) REPORTABLE HAZARD CATEGORIES: None.

SARA (313) TOXIC RELEASE INVENTORY:

Chemical Name	CAS Number	Typical Value
ZINC DITHIOPHOSPHATE	68649-42-3	1 - 2.5%

The following ingredients are cited on the lists below:

Chemical Name	CAS Number	List Citations
NAPHTHENIC ACIDS, ZINC SALTS	12001-85-3	15
ZINC DITHIOPHOSPHATE	68649-42-3	13, 15, 17
ZINC NEODECANOATE	27253-29-8	15

--REGULATORY LISTS SEARCHED--

1 = ACGIH ALL	6 = TSCA 5a2	11 = CA P65 REPRO	16 = MN RTK
2 = ACGIH A1	7 = TSCA 5e	12 = CA RTK	17 = NJ RTK
3 = ACGIH A2	8 = TSCA 6	13 = IL RTK	18 = PA RTK
4 = OSHA Z	9 = TSCA 12b	14 = LA RTK	19 = RI RTK
5 = TSCA 4	10 = CA P65 CARC	15 = MI 293	

Code key: CARC=Carcinogen; REPRO=Reproductive

SECTION 16	OTHER INFORMATION

N/D = Not determined, N/A = Not applicable

THIS SAFETY DATA SHEET CONTAINS THE FOLLOWING REVISIONS:

Revision Changes:
Section 06: Notification Procedures - Header was modified.
Section 01: Product Code was modified.
Section 10 Stability and Reactivity - Header was modified.
Section 13: Disposal Recommendations - Note was modified.
Section 09: Phys/Chem Properties Note was modified.
Section 09: Boiling Point C(F) was modified.

Section 09: n-Octanol/Water Partition Coefficient was modified.
Section 08: Personal Protection was modified.
Section 07: Handling and Storage - Handling was modified.
Section 11: Dermal Lethality Test Data was modified.
Section 11: Oral Lethality Test Data was modified.
Section 11: Inhalation Lethality Test Data was modified.
Section 05: Hazardous Combustion Products was modified.
Section 06: Accidental Release - Spill Management - Water was modified.
Section 09: Relative Density - Header was modified.
Section 09: Flash Point C(F) was modified.
Section 09: Viscosity was modified.
Section 14: Sea (IMDG) - Header was modified.
Section 14: Air (IATA) - Header was modified.
Section 14: LAND (TDG) - Header was modified.
Section 14: LAND (DOT) - Header was modified.
Composition: Component table was modified.
Section 15: List Citations Table was modified.
Section 15: List Citation Table - Header was modified.
Section 14: LAND (DOT) - Default was modified.
Section 14: LAND (TDG) Default was modified.
Section 14: Sea (IMDG) - Default was modified.
Section 14: Air (IATA) - Default was modified.
Section 15: National Chemical Inventory Listing - Header was modified.
Section 15: SARA (313) TOXIC RELEASE INVENTORY - Table was modified.
Section 15: National Chemical Inventory Listing was modified.
Section 16: Code to MHCs was modified.
Section 08: Exposure limits/standards was modified.
Section 15: OSHA Hazard Communication Standard was modified.
Section 15: Special Cases Table was modified.
Hazard Identification: OSHA - May be Hazardous Statement was modified.
Section 06: Notification Procedures was modified.
Section 09: Oxidizing Properties was modified.
Section 01: Company Contact Methods Sorted by Priority was modified.
Section 06: Protective Measures was added.
Section 06: Accidental Release - Protective Measures - Header was added.
Section 09: Decomposition Temperature was added.
Section 09: Decomposition Temp - Header was added.
Section 09: Vapor Pressure was added.

The information and recommendations contained herein are, to the best of ExxonMobil's knowledge and belief, accurate and reliable as of the date issued. You can contact ExxonMobil to insure that this document is the most current available from ExxonMobil. The information and recommendations are offered for the user's consideration and examination. It is the user's responsibility to satisfy itself that the product is suitable for the intended use. If buyer repackages this product, it is the user's responsibility to insure proper health, safety and other necessary information is included with and/or on the container. Appropriate warnings and safe-handling procedures should be provided to handlers and users. Alteration of this document is strictly prohibited. Except to the extent required by law, re-publication or retransmission of this document, in whole or in part, is not permitted. The term, "ExxonMobil" is used for convenience, and may include any one or more of ExxonMobil Chemical Company, Exxon Mobil Corporation, or any affiliates in which they directly or indirectly hold any interest.

Internal Use Only

MHC: 0B, 0B, 0, 0, 0, 0 PPEC: A

DGN: 7049658XUS (1009426)

Copyright 2002 Exxon Mobil Corporation, All rights reserved

MATERIAL SAFETY DATA SHEET

SECTION 1 PRODUCT AND COMPANY IDENTIFICATION

PRODUCT

Product Name: **MOBIL HYDRAULIC AW 68**
Product Description: Base Oil and Additives
Product Code: 201560106520, 583039-49, 970557
Intended Use: Hydraulic fluid

COMPANY IDENTIFICATION

Supplier: **EXXON MOBIL CORPORATION**
3225 GALLOWS RD.
FAIRFAX, VA. 22037 USA

24 Hour Health Emergency	609-737-4411
Transportation Emergency Phone	800-424-9300
ExxonMobil Transportation No.	281-834-3296
Product Technical Information	800-662-4525, 800-947-9147
MSDS Internet Address	http://www.exxon.com, http://www.mobil.com

SECTION 2 COMPOSITION / INFORMATION ON INGREDIENTS

No Reportable Hazardous Substance(s) or Complex Substance(s).

SECTION 3 HAZARDS IDENTIFICATION

This material is not considered to be hazardous according to regulatory guidelines (see (M)SDS Section 15).

POTENTIAL HEALTH EFFECTS

Excessive exposure may result in eye, skin, or respiratory irritation. High-pressure injection under skin may cause serious damage.

NFPA Hazard ID:	Health:	0	Flammability:	1	Reactivity:	0
HMIS Hazard ID:	Health:	0	Flammability:	1	Reactivity:	0

NOTE: This material should not be used for any other purpose than the intended use in Section 1 without expert advice. Health studies have shown that chemical exposure may cause potential human health risks which may vary from person to person.

SECTION 4 FIRST AID MEASURES

INHALATION

Remove from further exposure. For those providing assistance, avoid exposure to yourself or others. Use

adequate respiratory protection. If respiratory irritation, dizziness, nausea, or unconsciousness occurs, seek immediate medical assistance. If breathing has stopped, assist ventilation with a mechanical device or use mouth-to-mouth resuscitation.

SKIN CONTACT

Wash contact areas with soap and water. If product is injected into or under the skin, or into any part of the body, regardless of the appearance of the wound or its size, the individual should be evaluated immediately by a physician as a surgical emergency. Even though initial symptoms from high pressure injection may be minimal or absent, early surgical treatment within the first few hours may significantly reduce the ultimate extent of injury.

EYE CONTACT

Flush thoroughly with water. If irritation occurs, get medical assistance.

INGESTION

First aid is normally not required. Seek medical attention if discomfort occurs.

SECTION 5 FIRE FIGHTING MEASURES

EXTINGUISHING MEDIA

Appropriate Extinguishing Media: Use water fog, foam, dry chemical or carbon dioxide (CO2) to extinguish flames.

Inappropriate Extinguishing Media: Straight Streams of Water

FIRE FIGHTING

Fire Fighting Instructions: Evacuate area. Prevent runoff from fire control or dilution from entering streams, sewers, or drinking water supply. Firefighters should use standard protective equipment and in enclosed spaces, self-contained breathing apparatus (SCBA). Use water spray to cool fire exposed surfaces and to protect personnel.

Unusual Fire Hazards: Pressurized mists may form a flammable mixture.

Hazardous Combustion Products: Smoke, Fume, Aldehydes, Sulfur oxides, Incomplete combustion products, Oxides of carbon

FLAMMABILITY PROPERTIES

Flash Point [Method]: >218°C (424°F) [ASTM D-92]
Flammable Limits (Approximate volume % in air): LEL: 0.9 UEL: 7.0
Autoignition Temperature: N/D

SECTION 6 ACCIDENTAL RELEASE MEASURES

NOTIFICATION PROCEDURES

In the event of a spill or accidental release, notify relevant authorities in accordance with all applicable regulations. US regulations require reporting releases of this material to the environment which exceed the applicable reportable quantity or oil spills which could reach any waterway including intermittent dry creeks. The

National Response Center can be reached at (800)424-8802.

PROTECTIVE MEASURES

Avoid contact with spilled material. See Section 5 for fire fighting information. See the Hazard Identification Section for Significant Hazards. See Section 4 for First Aid Advice. See Section 8 for advice on the minimum requirements for personal protective equipment. Additional protective measures may be necessary, depending on the specific circumstances and/or the expert judgment of the emergency responders. For emergency responders: Respiratory protection: respiratory protection will be necessary only in special cases, e.g., formation of mists. Half-face or full-face respirator with filter(s) for dust/organic vapor or Self Contained Breathing Apparatus (SCBA) can be used depending on the size of spill and potential level of exposure. If the exposure cannot be completely characterized or an oxygen deficient atmosphere is possible or anticipated, SCBA is recommended. Work gloves that are resistant to hydrocarbons are recommended. Gloves made of polyvinyl acetate (PVA) are not water-resistant and are not suitable for emergency use. Chemical goggles are recommended if splashes or contact with eyes is possible. Small spills: normal antistatic work clothes are usually adequate. Large spills: full body suit of chemical resistant, antistatic material is recommended.

SPILL MANAGEMENT

Land Spill: Stop leak if you can do it without risk. Recover by pumping or with suitable absorbent.

Water Spill: Stop leak if you can do it without risk. Confine the spill immediately with booms. Warn other shipping. Remove from the surface by skimming or with suitable absorbents. Seek the advice of a specialist before using dispersants.

Water spill and land spill recommendations are based on the most likely spill scenario for this material; however, geographic conditions, wind, temperature, (and in the case of a water spill) wave and current direction and speed may greatly influence the appropriate action to be taken. For this reason, local experts should be consulted. Note: Local regulations may prescribe or limit action to be taken.

ENVIRONMENTAL PRECAUTIONS

Large Spills: Dike far ahead of liquid spill for later recovery and disposal. Prevent entry into waterways, sewers, basements or confined areas.

SECTION 7 HANDLING AND STORAGE

HANDLING

Prevent small spills and leakage to avoid slip hazard. Material can accumulate static charges which may cause an electrical spark (ignition source). When the material is handled in bulk, an electrical spark could ignite any flammable vapors from liquids or residues that may be present (e.g., during switch-loading operations). Use proper bonding and/or ground procedures. However, bonding and grounds may not eliminate the hazard from static accumulation. Consult local applicable standards for guidance. Additional references include American Petroleum Institute 2003 (Protection Against Ignitions Arising out of Static, Lightning and Stray Currents) or National Fire Protection Agency 77 (Recommended Practice on Static Electricity) or CENELEC CLC/TR 50404 (Electrostatics - Code of practice for the avoidance of hazards due to static electricity).

Static Accumulator: This material is a static accumulator.

STORAGE

The container choice, for example storage vessel, may effect static accumulation and dissipation. Do not store in open or unlabelled containers.

SECTION 8 EXPOSURE CONTROLS / PERSONAL PROTECTION

Exposure limits/standards for materials that can be formed when handling this product: When mists/aerosols can occur the following are recommended: 5 mg/m³ - ACGIH TLV (inhalable fraction), 5 mg/m³ - OSHA PEL.

NOTE: Limits/standards shown for guidance only. Follow applicable regulations.

ENGINEERING CONTROLS

The level of protection and types of controls necessary will vary depending upon potential exposure conditions. Control measures to consider:
No special requirements under ordinary conditions of use and with adequate ventilation.

PERSONAL PROTECTION

Personal protective equipment selections vary based on potential exposure conditions such as applications, handling practices, concentration and ventilation. Information on the selection of protective equipment for use with this material, as provided below, is based upon intended, normal usage.

Respiratory Protection: If engineering controls do not maintain airborne contaminant concentrations at a level which is adequate to protect worker health, an approved respirator may be appropriate. Respirator selection, use, and maintenance must be in accordance with regulatory requirements, if applicable. Types of respirators to be considered for this material include:
No special requirements under ordinary conditions of use and with adequate ventilation.

For high airborne concentrations, use an approved supplied-air respirator, operated in positive pressure mode. Supplied air respirators with an escape bottle may be appropriate when oxygen levels are inadequate, gas/vapor warning properties are poor, or if air purifying filter capacity/rating may be exceeded.

Hand Protection: Any specific glove information provided is based on published literature and glove manufacturer data. Glove suitability and breakthrough time will differ depending on the specific use conditions. Contact the glove manufacturer for specific advice on glove selection and breakthrough times for your use conditions. Inspect and replace worn or damaged gloves. The types of gloves to be considered for this material include:
No protection is ordinarily required under normal conditions of use.

Eye Protection: If contact is likely, safety glasses with side shields are recommended.

Skin and Body Protection: Any specific clothing information provided is based on published literature or manufacturer data. The types of clothing to be considered for this material include:
No skin protection is ordinarily required under normal conditions of use. In accordance with good industrial hygiene practices, precautions should be taken to avoid skin contact.

Specific Hygiene Measures: Always observe good personal hygiene measures, such as washing after handling the material and before eating, drinking, and/or smoking. Routinely wash work clothing and protective equipment to remove contaminants. Discard contaminated clothing and footwear that cannot be cleaned. Practice good housekeeping.

ENVIRONMENTAL CONTROLS

Comply with applicable environmental regulations limiting discharge to air, water and soil. Protect the environment by applying appropriate control measures to prevent or limit emissions.

SECTION 9 PHYSICAL AND CHEMICAL PROPERTIES

Note: Physical and chemical properties are provided for safety, health and environmental considerations only and may not fully represent product specifications. Contact the Supplier for additional information.

GENERAL INFORMATION

Physical State: Liquid
Color: Amber
Odor: Characteristic
Odor Threshold: N/D

IMPORTANT HEALTH, SAFETY, AND ENVIRONMENTAL INFORMATION

Relative Density (at 15 °C): 0.883
Flash Point [Method]: >218°C (424°F) [ASTM D-92]
Flammable Limits (Approximate volume % in air): LEL: 0.9 UEL: 7.0
Autoignition Temperature: N/D
Boiling Point / Range: > 316°C (600°F)
Vapor Density (Air = 1): > 2 at 101 kPa
Vapor Pressure: < 0.013 kPa (0.1 mm Hg) at 20 °C
Evaporation Rate (n-butyl acetate = 1): N/D
pH: N/A
Log Pow (n-Octanol/Water Partition Coefficient): > 3.5
Solubility in Water: Negligible
Viscosity: 68 cSt (68 mm2/sec) at 40 °C | 8.5 cSt (8.5 mm2/sec) at 100°C
Oxidizing Properties: See Hazards Identification Section.

OTHER INFORMATION

Freezing Point: N/D
Melting Point: N/A
Pour Point: -12°C (10°F)
DMSO Extract (mineral oil only), IP-346: < 3 %wt

SECTION 10 STABILITY AND REACTIVITY

STABILITY: Material is stable under normal conditions.

CONDITIONS TO AVOID: Excessive heat. High energy sources of ignition.

MATERIALS TO AVOID: Strong oxidizers

HAZARDOUS DECOMPOSITION PRODUCTS: Material does not decompose at ambient temperatures.

HAZARDOUS POLYMERIZATION: Will not occur.

SECTION 11 TOXICOLOGICAL INFORMATION

ACUTE TOXICITY

Route of Exposure	Conclusion / Remarks
Inhalation	
Toxicity: No end point data for material.	Minimally Toxic. Based on assessment of the components.
Irritation: No end point data for material.	Negligible hazard at ambient/normal handling temperatures. Based on assessment of the components.
Ingestion	
Toxicity: No end point data for material.	Minimally Toxic. Based on assessment of the components.
Skin	
Toxicity: No end point data for material.	Minimally Toxic. Based on assessment of the components.
Irritation: No end point data for material.	Negligible irritation to skin at ambient temperatures. Based on assessment of the components.
Eye	
Irritation: No end point data for material.	May cause mild, short-lasting discomfort to eyes. Based on assessment of the components.

CHRONIC/OTHER EFFECTS

Contains:

Base oil severely refined: Not carcinogenic in animal studies. Representative material passes IP-346, Modified Ames test, and/or other screening tests. Dermal and inhalation studies showed minimal effects; lung non-specific infiltration of immune cells, oil deposition and minimal granuloma formation. Not sensitizing in test animals.

Additional information is available by request.

The following ingredients are cited on the lists below: None.

--REGULATORY LISTS SEARCHED--

1 = NTP CARC	3 = IARC 1	5 = IARC 2B
2 = NTP SUS	4 = IARC 2A	6 = OSHA CARC

SECTION 12 ECOLOGICAL INFORMATION

The information given is based on data available for the material, the components of the material, and similar materials.

ECOTOXICITY

Material -- Not expected to be harmful to aquatic organisms.

MOBILITY

Base oil component -- Low solubility and floats and is expected to migrate from water to the land. Expected to partition to sediment and wastewater solids.

PERSISTENCE AND DEGRADABILITY

Biodegradation:

Base oil component -- Expected to be inherently biodegradable

BIOACCUMULATION POTENTIAL

Base oil component -- Has the potential to bioaccumulate, however metabolism or physical properties may reduce the bioconcentration or limit bioavailability.

OTHER ECOLOGICAL INFORMATION

VOC: 0 G/L [ASTM E1868-10]

SECTION 13 DISPOSAL CONSIDERATIONS

Disposal recommendations based on material as supplied. Disposal must be in accordance with current applicable laws and regulations, and material characteristics at time of disposal.

DISPOSAL RECOMMENDATIONS

Product is suitable for burning in an enclosed controlled burner for fuel value or disposal by supervised incineration at very high temperatures to prevent formation of undesirable combustion products. Protect the environment. Dispose of used oil at designated sites. Minimize skin contact. Do not mix used oils with solvents, brake fluids or coolants.

REGULATORY DISPOSAL INFORMATION

RCRA Information: The unused product, in our opinion, is not specifically listed by the EPA as a hazardous waste (40 CFR, Part 261D), nor is it formulated to contain materials which are listed as hazardous wastes. It does not exhibit the hazardous characteristics of ignitability, corrositivity or reactivity and is not formulated with contaminants as determined by the Toxicity Characteristic Leaching Procedure (TCLP). However, used product may be regulated.

Empty Container Warning Empty Container Warning (where applicable): Empty containers may contain residue and can be dangerous. Do not attempt to refill or clean containers without proper instructions. Empty drums should be completely drained and safely stored until appropriately reconditioned or disposed. Empty containers should be taken for recycling, recovery, or disposal through suitably qualified or licensed contractor and in accordance with governmental regulations. DO NOT PRESSURISE, CUT, WELD, BRAZE, SOLDER, DRILL, GRIND, OR EXPOSE SUCH CONTAINERS TO HEAT, FLAME, SPARKS, STATIC ELECTRICITY, OR OTHER SOURCES OF IGNITION. THEY MAY EXPLODE AND CAUSE INJURY OR DEATH.

SECTION 14 TRANSPORT INFORMATION

LAND (DOT): Not Regulated for Land Transport

LAND (TDG): Not Regulated for Land Transport

SEA (IMDG): Not Regulated for Sea Transport according to IMDG-Code

AIR (IATA): Not Regulated for Air Transport

SECTION 15 REGULATORY INFORMATION

OSHA HAZARD COMMUNICATION STANDARD: When used for its intended purposes, this material is not classified as hazardous in accordance with OSHA 29 CFR 1910.1200.

Complies with the following national/regional chemical inventory requirements:: AICS, DSL, IECSC, PICCS, TSCA

EPCRA SECTION 302: This material contains no extremely hazardous substances.

SARA (311/312) REPORTABLE HAZARD CATEGORIES: None.

SARA (313) TOXIC RELEASE INVENTORY: This material contains no chemicals subject to the supplier notification requirements of the SARA 313 Toxic Release Program.

The following ingredients are cited on the lists below:

Chemical Name	CAS Number	List Citations
ZINC ALKYLDITHIOPHOSPHATE	68649-42-3	15

--REGULATORY LISTS SEARCHED--

1 = ACGIH ALL	6 = TSCA 5a2	11 = CA P65 REPRO	16 = MN RTK
2 = ACGIH A1	7 = TSCA 5e	12 = CA RTK	17 = NJ RTK
3 = ACGIH A2	8 = TSCA 6	13 = IL RTK	18 = PA RTK
4 = OSHA Z	9 = TSCA 12b	14 = LA RTK	19 = RI RTK
5 = TSCA 4	10 = CA P65 CARC	15 = MI 293	

Code key: CARC=Carcinogen; REPRO=Reproductive

SECTION 16 OTHER INFORMATION

N/D = Not determined, N/A = Not applicable

THIS SAFETY DATA SHEET CONTAINS THE FOLLOWING REVISIONS:
Revision Changes:
Section 04: First Aid Inhalation - Header was modified.
Section 04: First Aid Ingestion - Header was modified.
Section 13: Disposal Considerations - Disposal Recommendations was modified.
Section 09: Phys/Chem Properties Note was modified.
Section 09: Boiling Point C(F) was modified.
Section 09: Evaporation Rate - Header was modified.
Section 08: Comply with applicable regulations phrase was modified.
Section 09: Vapor Pressure was modified.
Section 07: Handling and Storage - Handling was modified.
Section 07: Handling and Storage - Storage Phrases was modified.
Hazard Identification: Health Hazards was modified.

Section 11: Dermal Lethality Test Data was modified.
Section 11: Dermal Lethality Test Comment was modified.
Section 11: Oral Lethality Test Data was modified.
Section 11: Inhalation Lethality Test Data was modified.
Section 11: Dermal Irritation Test Data was modified.
Section 11: Eye Irritation Test Data was modified.
Section 11: Oral Lethality Test Comment was modified.
Section 11: Inhalation Irritation Test Data was modified.
Section 05: Hazardous Combustion Products was modified.
Section 06: Accidental Release - Spill Management - Water was modified.
Section 09: Relative Density - Header was modified.
Section 09: Flash Point C(F) was modified.
Section 09: Viscosity was modified.
Section 09: Viscosity was modified.
Section 14: Sea (IMDG) - Header was modified.
Section 14: Air (IATA) - Header was modified.
Section 14: LAND (TDG) - Header was modified.
Section 14: LAND (DOT) - Header was modified.
Section 15: List Citation Table - Header was modified.
Section 14: LAND (DOT) - Default was modified.
Section 14: LAND (TDG) Default was modified.
Section 14: Sea (IMDG) - Default was modified.
Section 14: Air (IATA) - Default was modified.
Section 15: National Chemical Inventory Listing - Header was modified.
Section 15: National Chemical Inventory Listing was modified.
Section 09: Relative Density was modified.
Section 15: Community RTK - Header was modified.
Section 16: MSN, MAT ID was modified.
Section 08: Exposure limits/standards was modified.
Section 09: Oxidizing Properties was modified.
Section 06: Protective Measures was added.
Section 06: Accidental Release - Protective Measures - Header was added.
Section 12: Other Ecological Information - Header was added.
Section 15: Chemical Name - Header was added.
Section 15: CAS Number - Header was added.
Section 15: List Citations - Header was added.
Section 15: List Citations Table was added.
Section 12: California VOC was added.
Section 12: California VOC was added.
Section 15: Special Cases - Header was deleted.
Section 15: Special Cases Table was deleted.
Section 15: Inventory - Header was deleted.
Section 15: Status - Header was deleted.

The information and recommendations contained herein are, to the best of ExxonMobil's knowledge and belief, accurate and reliable as of the date issued. You can contact ExxonMobil to insure that this document is the most current available from ExxonMobil. The information and recommendations are offered for the user's consideration and examination. It is the user's responsibility to satisfy itself that the product is suitable for the intended use. If buyer repackages this product, it is the user's responsibility to insure proper health, safety and other necessary information is included with and/or on the container. Appropriate warnings and safe-handling procedures should be provided to handlers and users. Alteration of this document is strictly prohibited. Except to the extent required by law,

re-publication or retransmission of this document, in whole or in part, is not permitted. The term, "ExxonMobil" is used for convenience, and may include any one or more of ExxonMobil Chemical Company, Exxon Mobil Corporation, or any affiliates in which they directly or indirectly hold any interest.

Internal Use Only

MHC: 0B, 0B, 0, 0, 0, 0 PPEC: A

DGN: 2006835XUS (1012737)

Copyright 2002 Exxon Mobil Corporation, All rights reserved

MATERIAL SAFETY DATA SHEET

SECTION 1 PRODUCT AND COMPANY IDENTIFICATION

PRODUCT

Product Name: **MOBIL POLYREX EM**
Product Description: Base Oil and Additives
Product Code: 2015A020G010, 641688-00, 97Y278
Intended Use: Grease

COMPANY IDENTIFICATION

Supplier: **EXXON MOBIL CORPORATION**
3225 GALLOWS RD.
FAIRFAX, VA. 22037 USA

24 Hour Health Emergency	609-737-4411
Transportation Emergency Phone	800-424-9300
ExxonMobil Transportation No.	281-834-3296
Product Technical Information	800-662-4525, 800-947-9147
MSDS Internet Address	http://www.exxon.com, http://www.mobil.com

SECTION 2 COMPOSITION / INFORMATION ON INGREDIENTS

Reportable Hazardous Substance(s) or Complex Substance(s)

Name	CAS#	Concentration*
AMINES, C12-14-ALKYL, ISOOCTYL PHOSPHATES	68187-67-7	1 - 5%

* All concentrations are percent by weight unless material is a gas. Gas concentrations are in percent by volume.

SECTION 3 HAZARDS IDENTIFICATION

This material is not considered to be hazardous according to regulatory guidelines (see (M)SDS Section 15).

POTENTIAL HEALTH EFFECTS

Excessive exposure may result in eye, skin, or respiratory irritation. High-pressure injection under skin may cause serious damage.

NFPA Hazard ID:	Health:	0	Flammability:	1	Reactivity:	0
HMIS Hazard ID:	Health:	0	Flammability:	1	Reactivity:	0

NOTE: This material should not be used for any other purpose than the intended use in Section 1 without expert advice. Health studies have shown that chemical exposure may cause potential human health risks which may vary from person to person.

SECTION 4 FIRST AID MEASURES

INHALATION
Under normal conditions of intended use, this material is not expected to be an inhalation hazard.

SKIN CONTACT
Wash contact areas with soap and water. Remove contaminated clothing. Launder contaminated clothing before reuse. If product is injected into or under the skin, or into any part of the body, regardless of the appearance of the wound or its size, the individual should be evaluated immediately by a physician as a surgical emergency. Even though initial symptoms from high pressure injection may be minimal or absent, early surgical treatment within the first few hours may significantly reduce the ultimate extent of injury.

EYE CONTACT
Flush thoroughly with water. If irritation occurs, get medical assistance.

INGESTION
First aid is normally not required. Seek medical attention if discomfort occurs.

SECTION 5 FIRE FIGHTING MEASURES

EXTINGUISHING MEDIA
Appropriate Extinguishing Media: Use water fog, foam, dry chemical or carbon dioxide (CO_2) to extinguish flames.

Inappropriate Extinguishing Media: Straight Streams of Water

FIRE FIGHTING
Fire Fighting Instructions: Evacuate area. Prevent runoff from fire control or dilution from entering streams, sewers, or drinking water supply. Firefighters should use standard protective equipment and in enclosed spaces, self-contained breathing apparatus (SCBA). Use water spray to cool fire exposed surfaces and to protect personnel.

Hazardous Combustion Products: Smoke, Fume, Aldehydes, Sulfur oxides, Incomplete combustion products, Oxides of carbon

FLAMMABILITY PROPERTIES
Flash Point [Method]: >204°C (399°F) [EST. FOR OIL, ASTM D-92 (COC)]
Flammable Limits (Approximate volume % in air): LEL: N/D UEL: N/D
Autoignition Temperature: N/D

SECTION 6 ACCIDENTAL RELEASE MEASURES

NOTIFICATION PROCEDURES
In the event of a spill or accidental release, notify relevant authorities in accordance with all applicable regulations. US regulations require reporting releases of this material to the environment which exceed the applicable reportable quantity or oil spills which could reach any waterway including intermittent dry creeks. The National Response Center can be reached at (800)424-8802.

PROTECTIVE MEASURES

Avoid contact with spilled material. Warn or evacuate occupants in surrounding and downwind areas if required due to toxicity or flammability of the material. See Section 5 for fire fighting information. See the Hazard Identification Section for Significant Hazards. See Section 4 for First Aid Advice. See Section 8 for advice on the minimum requirements for personal protective equipment. Additional protective measures may be necessary, depending on the specific circumstances and/or the expert judgment of the emergency responders.

For emergency responders: Respiratory protection: respiratory protection will be necessary only in special cases, e.g., formation of mists. Half-face or full-face respirator with filter(s) for dust/organic vapor or Self Contained Breathing Apparatus (SCBA) can be used depending on the size of spill and potential level of exposure. If the exposure cannot be completely characterized or an oxygen deficient atmosphere is possible or anticipated, SCBA is recommended. Work gloves that are resistant to hydrocarbons are recommended. Gloves made of polyvinyl acetate (PVA) are not water-resistant and are not suitable for emergency use. Chemical goggles are recommended if splashes or contact with eyes is possible. Small spills: normal antistatic work clothes are usually adequate. Large spills: full body suit of chemical resistant, antistatic material is recommended.

SPILL MANAGEMENT

Land Spill: Scrape up spilled material with shovels into a suitable container for recycle or disposal.

Water Spill: Stop leak if you can do it without risk. Confine the spill immediately with booms. Warn other shipping. Skim from surface.

Water spill and land spill recommendations are based on the most likely spill scenario for this material; however, geographic conditions, wind, temperature, (and in the case of a water spill) wave and current direction and speed may greatly influence the appropriate action to be taken. For this reason, local experts should be consulted. Note: Local regulations may prescribe or limit action to be taken.

ENVIRONMENTAL PRECAUTIONS

Prevent entry into waterways, sewers, basements or confined areas.

SECTION 7 HANDLING AND STORAGE

HANDLING

Avoid contact with skin. Prevent small spills and leakage to avoid slip hazard.

Static Accumulator: This material is not a static accumulator.

STORAGE

Do not store in open or unlabelled containers.

SECTION 8 EXPOSURE CONTROLS / PERSONAL PROTECTION

NOTE: Limits/standards shown for guidance only. Follow applicable regulations.

ENGINEERING CONTROLS

The level of protection and types of controls necessary will vary depending upon potential exposure conditions. Control measures to consider:
No special requirements under ordinary conditions of use and with adequate ventilation.

PERSONAL PROTECTION

Personal protective equipment selections vary based on potential exposure conditions such as applications, handling practices, concentration and ventilation. Information on the selection of protective equipment for use with this material, as provided below, is based upon intended, normal usage.

Respiratory Protection: If engineering controls do not maintain airborne contaminant concentrations at a level which is adequate to protect worker health, an approved respirator may be appropriate. Respirator selection, use, and maintenance must be in accordance with regulatory requirements, if applicable. Types of respirators to be considered for this material include:
No protection is ordinarily required under normal conditions of use and with adequate ventilation.

For high airborne concentrations, use an approved supplied-air respirator, operated in positive pressure mode. Supplied air respirators with an escape bottle may be appropriate when oxygen levels are inadequate, gas/vapor warning properties are poor, or if air purifying filter capacity/rating may be exceeded.

Hand Protection: Any specific glove information provided is based on published literature and glove manufacturer data. Glove suitability and breakthrough time will differ depending on the specific use conditions. Contact the glove manufacturer for specific advice on glove selection and breakthrough times for your use conditions. Inspect and replace worn or damaged gloves. The types of gloves to be considered for this material include:
Chemical resistant gloves are recommended. If contact with forearms is likely wear gauntlet style gloves.

Eye Protection: If contact is likely, safety glasses with side shields are recommended.

Skin and Body Protection: Any specific clothing information provided is based on published literature or manufacturer data. The types of clothing to be considered for this material include:
Chemical/oil resistant clothing is recommended.

Specific Hygiene Measures: Always observe good personal hygiene measures, such as washing after handling the material and before eating, drinking, and/or smoking. Routinely wash work clothing and protective equipment to remove contaminants. Discard contaminated clothing and footwear that cannot be cleaned. Practice good housekeeping.

ENVIRONMENTAL CONTROLS

Comply with applicable environmental regulations limiting discharge to air, water and soil. Protect the environment by applying appropriate control measures to prevent or limit emissions.

SECTION 9 PHYSICAL AND CHEMICAL PROPERTIES

Note: Physical and chemical properties are provided for safety, health and environmental considerations only and may not fully represent product specifications. Contact the Supplier for additional information.

GENERAL INFORMATION

Physical State: Solid
Form: Semi-fluid
Color: Blue
Odor: Characteristic
Odor Threshold: N/D

IMPORTANT HEALTH, SAFETY, AND ENVIRONMENTAL INFORMATION

Relative Density (at 15 °C): 0.884
Flash Point [Method]: >204°C (399°F) [EST. FOR OIL, ASTM D-92 (COC)]
Flammable Limits (Approximate volume % in air): LEL: N/D UEL: N/D
Autoignition Temperature: N/D
Boiling Point / Range: > 330°C (626°F) [Estimated]
Vapor Density (Air = 1): N/D
Vapor Pressure: < 0.013 kPa (0.1 mm Hg) at 20 °C [Estimated]
Evaporation Rate (n-butyl acetate = 1): N/D
pH: N/A
Log Pow (n-Octanol/Water Partition Coefficient): > 3.5 [Estimated]
Solubility in Water: Negligible
Viscosity: 95 cSt (95 mm2/sec) at 40 °C
Oxidizing Properties: See Hazards Identification Section.

OTHER INFORMATION

Freezing Point: N/D
Melting Point: >250°C (482°F)
DMSO Extract (mineral oil only), IP-346: < 3 %wt
Decomposition Temperature: N/D

NOTE: Most physical properties above are for the oil component in the material.

SECTION 10 STABILITY AND REACTIVITY

STABILITY: Material is stable under normal conditions.

CONDITIONS TO AVOID: Excessive heat. High energy sources of ignition.

MATERIALS TO AVOID: Strong oxidizers

HAZARDOUS DECOMPOSITION PRODUCTS: Material does not decompose at ambient temperatures.

HAZARDOUS POLYMERIZATION: Will not occur.

SECTION 11 TOXICOLOGICAL INFORMATION

ACUTE TOXICITY

Route of Exposure	Conclusion / Remarks
Inhalation	
Toxicity: No end point data for material.	Minimally Toxic. Based on assessment of the components.
Irritation: No end point data for material.	Negligible hazard at ambient/normal handling temperatures. Based

	on assessment of the components.
Ingestion	
Toxicity: No end point data for material.	Minimally Toxic. Based on assessment of the components.
Skin	
Toxicity: No end point data for material.	Minimally Toxic. Based on assessment of the components.
Irritation: No end point data for material.	Mildly irritating to skin with prolonged exposure. Based on assessment of the components.
Eye	
Irritation: No end point data for material.	May cause mild, short-lasting discomfort to eyes. Based on assessment of the components.

CHRONIC/OTHER EFFECTS

Contains:

Base oil severely refined: Not carcinogenic in animal studies. Representative material passes IP-346, Modified Ames test, and/or other screening tests. Dermal and inhalation studies showed minimal effects; lung non-specific infiltration of immune cells, oil deposition and minimal granuloma formation. Not sensitizing in test animals.

The following ingredients are cited on the lists below: None.

--REGULATORY LISTS SEARCHED--

1 = NTP CARC	3 = IARC 1	5 = IARC 2B
2 = NTP SUS	4 = IARC 2A	6 = OSHA CARC

SECTION 12 ECOLOGICAL INFORMATION

The information given is based on data available for the material, the components of the material, and similar materials.

ECOTOXICITY

Material -- Not expected to be harmful to aquatic organisms.

MOBILITY

Base oil component -- Low solubility and floats and is expected to migrate from water to the land. Expected to partition to sediment and wastewater solids.

PERSISTENCE AND DEGRADABILITY

Biodegradation:

Base oil component -- Expected to be inherently biodegradable

BIOACCUMULATION POTENTIAL

Base oil component -- Has the potential to bioaccumulate, however metabolism or physical properties may reduce the bioconcentration or limit bioavailability.

SECTION 13 DISPOSAL CONSIDERATIONS

Disposal recommendations based on material as supplied. Disposal must be in accordance with current applicable laws and regulations, and material characteristics at time of disposal.

DISPOSAL RECOMMENDATIONS

Product is suitable for burning in an enclosed controlled burner for fuel value or disposal by supervised incineration at very high temperatures to prevent formation of undesirable combustion products.

REGULATORY DISPOSAL INFORMATION

RCRA Information: The unused product, in our opinion, is not specifically listed by the EPA as a hazardous waste (40 CFR, Part 261D), nor is it formulated to contain materials which are listed as hazardous wastes. It does not exhibit the hazardous characteristics of ignitability, corrositivity or reactivity and is not formulated with contaminants as determined by the Toxicity Characteristic Leaching Procedure (TCLP). However, used product may be regulated.

Empty Container Warning Empty Container Warning (where applicable): Empty containers may contain residue and can be dangerous. Do not attempt to refill or clean containers without proper instructions. Empty drums should be completely drained and safely stored until appropriately reconditioned or disposed. Empty containers should be taken for recycling, recovery, or disposal through suitably qualified or licensed contractor and in accordance with governmental regulations. DO NOT PRESSURISE, CUT, WELD, BRAZE, SOLDER, DRILL, GRIND, OR EXPOSE SUCH CONTAINERS TO HEAT, FLAME, SPARKS, STATIC ELECTRICITY, OR OTHER SOURCES OF IGNITION. THEY MAY EXPLODE AND CAUSE INJURY OR DEATH.

SECTION 14 TRANSPORT INFORMATION

LAND (DOT): Not Regulated for Land Transport

LAND (TDG): Not Regulated for Land Transport

SEA (IMDG): Not Regulated for Sea Transport according to IMDG-Code

AIR (IATA): Not Regulated for Air Transport

SECTION 15 REGULATORY INFORMATION

OSHA HAZARD COMMUNICATION STANDARD: When used for its intended purposes, this material is not classified as hazardous in accordance with OSHA 29 CFR 1910.1200.

Complies with the following national/regional chemical inventory requirements: AICS, IECSC, KECI, TSCA

Special Cases:

Inventory	Status
NDSL	Restrictions Apply

EPCRA SECTION 302: This material contains no extremely hazardous substances.

SARA (311/312) REPORTABLE HAZARD CATEGORIES: None.

SARA (313) TOXIC RELEASE INVENTORY: This material contains no chemicals subject to the supplier notification requirements of the SARA 313 Toxic Release Program.

The following ingredients are cited on the lists below:

Chemical Name	CAS Number	List Citations
DIPHENYLAMINE	122-39-4	18

--REGULATORY LISTS SEARCHED--

1 = ACGIH ALL	6 = TSCA 5a2	11 = CA P65 REPRO	16 = MN RTK
2 = ACGIH A1	7 = TSCA 5e	12 = CA RTK	17 = NJ RTK
3 = ACGIH A2	8 = TSCA 6	13 = IL RTK	18 = PA RTK
4 = OSHA Z	9 = TSCA 12b	14 = LA RTK	19 = RI RTK
5 = TSCA 4	10 = CA P65 CARC	15 = MI 293	

Code key: CARC=Carcinogen; REPRO=Reproductive

SECTION 16 OTHER INFORMATION

N/D = Not determined, N/A = Not applicable

THIS SAFETY DATA SHEET CONTAINS THE FOLLOWING REVISIONS:
Revision Changes:
Section 06: Protective Measures was modified.
Section 09: Phys/Chem Properties Note was modified.
Section 09: Boiling Point C(F) was modified.
Section 09: n-Octanol/Water Partition Coefficient was modified.
Section 08: Comply with applicable regulations phrase was modified.
Section 09: Vapor Pressure was modified.
Hazard Identification: Health Hazards was modified.
Section 11: Dermal Lethality Test Data was modified.
Section 11: Dermal Lethality Test Comment was modified.
Section 11: Oral Lethality Test Data was modified.
Section 11: Inhalation Lethality Test Data was modified.
Section 11: Dermal Irritation Test Data was modified.
Section 11: Eye Irritation Test Data was modified.
Section 11: Oral Lethality Test Comment was modified.
Section 11: Inhalation Irritation Test Data was modified.
Section 09: Relative Density - Header was modified.
Section 09: Flash Point C(F) was modified.
Section 09: Viscosity was modified.
Section 14: LAND (TDG) - Header was modified.

Composition: Component table was modified.
Section 15: List Citations Table was modified.
Section 15: National Chemical Inventory Listing - Header was modified.
Section 15: National Chemical Inventory Listing was modified.
Section 15: Community RTK - Header was modified.
Section 11: Additional Health Information was modified.
Section 09: Melting Point C(F) was modified.
Section 15: Special Cases Table was modified.
Section 01: Company Contact Methods Sorted by Priority was modified.
Section 09: Vapor Pressure was added.

The information and recommendations contained herein are, to the best of ExxonMobil's knowledge and belief, accurate and reliable as of the date issued. You can contact ExxonMobil to insure that this document is the most current available from ExxonMobil. The information and recommendations are offered for the user's consideration and examination. It is the user's responsibility to satisfy itself that the product is suitable for the intended use. If buyer repackages this product, it is the user's responsibility to insure proper health, safety and other necessary information is included with and/or on the container. Appropriate warnings and safe-handling procedures should be provided to handlers and users. Alteration of this document is strictly prohibited. Except to the extent required by law, re-publication or retransmission of this document, in whole or in part, is not permitted. The term, "ExxonMobil" is used for convenience, and may include any one or more of ExxonMobil Chemical Company, Exxon Mobil Corporation, or any affiliates in which they directly or indirectly hold any interest.

Internal Use Only
MHC: 0B, 0B, 0, 0, 2, 0 PPEC: A

DGN: 2031547XUS (1008419)

Copyright 2002 Exxon Mobil Corporation, All rights reserved

SAFETY DATA SHEET

PRODUCT

NALCO® 1720

EMERGENCY TELEPHONE NUMBER(S)

(800) 424-9300 (24 Hours) CHEMTREC

1. CHEMICAL PRODUCT AND COMPANY IDENTIFICATION

PRODUCT NAME : **NALCO® 1720**

APPLICATION : OXYGEN SCAVENGER

COMPANY IDENTIFICATION : Nalco Company
1601 W. Diehl Road
Naperville, Illinois
60563-1198

EMERGENCY TELEPHONE NUMBER(S) : (800) 424-9300 (24 Hours) CHEMTREC

NFPA 704M/HMIS RATING
HEALTH : 2 / 2* FLAMMABILITY : 0 / 0 INSTABILITY : 0 / 0 OTHER :
0 = Insignificant 1 = Slight 2 = Moderate 3 = High 4 = Extreme * = Chronic Health Hazard

2. COMPOSITION/INFORMATION ON INGREDIENTS

Our hazard evaluation has identified the following chemical substance(s) as hazardous. Consult Section 15 for the nature of the hazard(s).

Hazardous Substance(s)	CAS NO	% (w/w)
Sodium Bisulfite	7631-90-5	10.0 - 30.0
Potassium Bisulfite	7773-03-7	1.0 - 5.0
Cobalt Sulfate	10124-43-3	< 0.1

3. HAZARDS IDENTIFICATION

****EMERGENCY OVERVIEW****

WARNING
Harmful if swallowed. Contains Sulfite. Causes asthmatic signs and symptoms in hyper-reactive individuals. Irritating to respiratory system. May cause cancer by inhalation. Cobalt and cobalt compounds have been classified as possible carcinogens to humans (Group 2B) by IARC. The ACGIH lists cobalt and inorganic compounds as an animal carcinogen (A3). Contact with acids liberates toxic gas.
Do not get in eyes, on skin, on clothing. Do not take internally. Use with adequate ventilation. In case of contact with eyes, rinse immediately with plenty of water and seek medical advice. After contact with skin, wash immediately with plenty of water. Use a mild soap if available. Protect product from freezing.
Wear suitable protective clothing.
Not flammable or combustible. May evolve oxides of sulfur (SOx) under fire conditions.

PRIMARY ROUTES OF EXPOSURE :
Eye, Skin, Inhalation

HUMAN HEALTH HAZARDS - ACUTE :

EYE CONTACT :
May cause irritation with prolonged contact.

SKIN CONTACT :
May cause irritation with prolonged contact.

INGESTION :
Harmful if swallowed. Contains Sulfite. May cause asthmatic-like attack.

INHALATION :
Irritant to respiratory system. Causes asthmatic signs and symptoms in hyper-reactive individuals. May cause cancer by inhalation.

AGGRAVATION OF EXISTING CONDITIONS :
A review of available data does not identify any worsening of existing conditions.

HUMAN HEALTH HAZARDS - CHRONIC :
This product contains cobalt compounds. The International Agency for Research on Cancer (IARC) has evaluated cobalt and cobalt compounds and found it to be a possible human carcinogen.
Ingestion of sulfite can cause a severe allergic reaction in asthmatics and some sulfite sensitive individuals. The resulting symptoms can include difficulty in breathing, flushed skin and a rash. Chronic exposure to sulfites may cause symptoms of upper respiratory disease and affect sense of taste and smell.

4. FIRST AID MEASURES

EYE CONTACT :
Immediately flush with plenty of water for at least 15 minutes. If symptoms develop, seek medical advice.

SKIN CONTACT :
Flush with large amounts of water. Use soap if available. If symptoms develop, seek medical advice.

INGESTION :
Do not induce vomiting without medical advice. If conscious, washout mouth and give water to drink. Get medical attention.

INHALATION :
Remove to fresh air, treat symptomatically. Get medical attention.

NOTE TO PHYSICIAN :
Based on the individual reactions of the patient, the physician's judgement should be used to control symptoms and clinical condition.

5. FIRE FIGHTING MEASURES

FLASH POINT : None

EXTINGUISHING MEDIA :
Not expected to burn. Use extinguishing media appropriate for surrounding fire. Keep containers cool by spraying with water.

FIRE AND EXPLOSION HAZARD :
Not flammable or combustible. May evolve oxides of sulfur (SOx) under fire conditions.

SPECIAL PROTECTIVE EQUIPMENT FOR FIRE FIGHTING :
In case of fire, wear a full face positive-pressure self contained breathing apparatus and protective suit.

6. ACCIDENTAL RELEASE MEASURES

PERSONAL PRECAUTIONS :
Restrict access to area as appropriate until clean-up operations are complete. Use personal protective equipment recommended in Section 8 (Exposure Controls/Personal Protection). Stop or reduce any leaks if it is safe to do so. Keep people away from and upwind of spill/leak. Ventilate spill area if possible. Ensure clean-up is conducted by trained personnel only. Do not touch spilled material. Have emergency equipment (for fires, spills, leaks, etc.) readily available. Notify appropriate government, occupational health and safety and environmental authorities.

METHODS FOR CLEANING UP :
SMALL SPILLS: Soak up spill with absorbent material. Place residues in a suitable, covered, properly labeled container. Wash affected area. LARGE SPILLS: Contain liquid using absorbent material, by digging trenches or by diking. Reclaim into recovery or salvage drums or tank truck for proper disposal. Clean contaminated surfaces with water or aqueous cleaning agents. Contact an approved waste hauler for disposal of contaminated recovered material. Dispose of material in compliance with regulations indicated in Section 13 (Disposal Considerations).

ENVIRONMENTAL PRECAUTIONS :
Do not contaminate surface water.

7. HANDLING AND STORAGE

HANDLING :
Do not get in eyes, on skin, on clothing. Do not take internally. Use with adequate ventilation. Do not breathe vapors/gases/dust. Keep the containers closed when not in use. Have emergency equipment (for fires, spills, leaks, etc.) readily available. Ensure all containers are labeled.

STORAGE CONDITIONS :
Store the containers tightly closed. Store in suitable labeled containers. Store separately from acids. Store separately from oxidizers. Amine and sulphite products should not be stored within close proximity or resulting vapors may form visible airborne particles. Protect product from freezing.

SUITABLE CONSTRUCTION MATERIAL :
Polypropylene, Buna-N, EPDM, Polyethylene, Polyurethane, PVC, Neoprene, Chlorosulfonated polyethylene rubber, Fluoroelastomer Compatibility with Plastic Materials can vary; we therefore recommend that compatibility is tested prior to use.

UNSUITABLE CONSTRUCTION MATERIAL :
Brass, Mild steel, Stainless Steel 304, Stainless Steel 316L, 100% phenolic resin liner, Epoxy phenolic resin

8. EXPOSURE CONTROLS/PERSONAL PROTECTION

OCCUPATIONAL EXPOSURE LIMITS :
Exposure guidelines have not been established for this product. Available exposure limits for the substance(s) are shown below. Exposure limits are listed for sulfur dioxide (SO2) since this product evolves SO2 when open to the atmosphere.

Substance(s)	Category:	ppm	mg/m3	Non-Standard Unit
Sodium Bisulfite	ACGIH/TWA		5	
Sulfur Dioxide	ACGIH/STEL	0.25		
	OSHA Z1/PEL	5	13	

ENGINEERING MEASURES :
General ventilation is recommended. Use local exhaust ventilation if necessary to control airborne mist and vapor.

RESPIRATORY PROTECTION :
Where concentrations in air may exceed the limits given in this section or when significant mists, vapors, aerosols, or dusts are generated, an approved air purifying respirator equipped with suitable filter cartridges is recommended. Consult the respirator / cartridge manufacturer data to verify the suitability of specific devices. In event of emergency or planned entry into unknown concentrations a positive pressure, full-facepiece SCBA should be used. If respiratory protection is required, institute a complete respiratory protection program including selection, fit testing, training, maintenance and inspection.

HAND PROTECTION :
When handling this product, the use of chemical gloves is recommended. The choice of work glove depends on work conditions and what chemicals are handled. Please contact the PPE manufacturer for advice on what type of glove material may be suitable. Gloves should be replaced immediately if signs of degradation are observed.

SKIN PROTECTION :
Wear standard protective clothing.

EYE PROTECTION :
Wear chemical splash goggles.

HYGIENE RECOMMENDATIONS :
Use good work and personal hygiene practices to avoid exposure. Keep an eye wash fountain available. Keep a safety shower available. If clothing is contaminated, remove clothing and thoroughly wash the affected area. Launder contaminated clothing before reuse. Always wash thoroughly after handling chemicals. When handling this product never eat, drink or smoke.

HUMAN EXPOSURE CHARACTERIZATION :
Based on our recommended product application and personal protective equipment, the potential human exposure is: Low

9. PHYSICAL AND CHEMICAL PROPERTIES

PHYSICAL STATE	Liquid
APPEARANCE	Pink Clear
ODOR	Pungent

SPECIFIC GRAVITY	1.22 - 1.28 @ 60 °F / 15.6 °C
DENSITY	10.1 - 10.7 lb/gal
SOLUBILITY IN WATER	Complete
pH (100 %)	3.3 - 4.1
VISCOSITY	5 cps @ 60 °F / 15 °C
FREEZING POINT	11 °F / -11 °C
BOILING POINT	205 °F / 96 °C
VOC CONTENT	0 % Calculated

Note: These physical properties are typical values for this product and are subject to change.

10. STABILITY AND REACTIVITY

STABILITY :
Stable under normal conditions.

HAZARDOUS POLYMERIZATION :
Hazardous polymerization will not occur.

CONDITIONS TO AVOID :
Freezing temperatures.

MATERIALS TO AVOID :
Contact with strong oxidizers (e.g. chlorine, peroxides, chromates, nitric acid, perchlorate, concentrated oxygen, permanganate) may generate heat, fires, explosions and/or toxic vapors. Contact with strong acids (e.g. sulfuric, phosphoric, nitric, hydrochloric, chromic, sulfonic) may generate heat, splattering or boiling and toxic vapors. Contains Sulfite. SO2 may react with vapors from neutralizing amines and may produce a visible cloud of amine salt particles.

HAZARDOUS DECOMPOSITION PRODUCTS :
Under fire conditions: Oxides of sulfur, Hydrogen sulfide (H2S)

11. TOXICOLOGICAL INFORMATION

The following results are for a similar product.

ACUTE ORAL TOXICITY :

Species:	Rat
LD50:	4,112 mg/kg
Test Descriptor:	Similar Product

ACUTE DERMAL TOXICITY :
Species: Rabbit
LD50: > 3,000 mg/kg
Test Descriptor: Similar Product

SENSITIZATION :
Sulfites can cause an allergic reaction in sensitive individuals.

CARCINOGENICITY :
This product contains cobalt compounds. The International Agency for Research on Cancer (IARC) has evaluated cobalt and cobalt compounds and found it to be a possible human carcinogen.

HUMAN HAZARD CHARACTERIZATION :
Based on our hazard characterization, the potential human hazard is: High

12. ECOLOGICAL INFORMATION

ECOTOXICOLOGICAL EFFECTS :

The following results are for the product.

ACUTE FISH RESULTS :

Species	Exposure	LC50	Test Descriptor
Fathead Minnow	96 hrs	382 mg/l	Product
Inland Silverside	96 hrs	> 5,000 mg/l	Product

ACUTE INVERTEBRATE RESULTS :

Species	Exposure	LC50	EC50	Test Descriptor
Daphnia magna	48 hrs	728 mg/l		Product
Mysid Shrimp (Mysidopsis bahia)	96 hrs	> 5,000 mg/l		Product

MOBILITY :
The environmental fate was estimated using a level III fugacity model embedded in the EPI (estimation program interface) Suite TM, provided by the US EPA. The model assumes a steady state condition between the total input and output. The level III model does not require equilibrium between the defined media. The information provided is intended to give the user a general estimate of the environmental fate of this product under the defined conditions of the models.
If released into the environment this material is expected to distribute to the air, water and soil/sediment in the approximate respective percentages;

Air	Water	Soil/Sediment
<5%	30 - 50%	50 - 70%

The portion in water is expected to be soluble or dispersible.

BIOACCUMULATION POTENTIAL
The product will not bioaccumulate.

ENVIRONMENTAL HAZARD AND EXPOSURE CHARACTERIZATION
Based on our hazard characterization, the potential environmental hazard is: Low
Based on our recommended product application and the product's characteristics, the potential environmental exposure is: High

If released into the environment, see CERCLA/SUPERFUND in Section 15.

13. DISPOSAL CONSIDERATIONS

If this product becomes a waste, it is not a hazardous waste as defined by the Resource Conservation and Recovery Act (RCRA) 40 CFR 261, since it does not have the characteristics of Subpart C, nor is it listed under Subpart D.

Hazardous wastes must be transported by a licensed hazardous waste transporter and disposed of or treated in a properly licensed hazardous waste treatment, storage, disposal or recycling facility. Consult local, state, and federal regulations for specific requirements.

14. TRANSPORT INFORMATION

The information in this section is for reference only and should not take the place of a shipping paper (bill of lading) specific to an order. Please note that the proper Shipping Name / Hazard Class may vary by packaging, properties, and mode of transportation. Typical Proper Shipping Names for this product are as follows.

The presence of an RQ component (Reportable Quantity for U.S. EPA and DOT) in this product causes it to be regulated with an additional description of RQ for road, or as a class 9 for road and air, ONLY when the net weight in the package exceeds the calculated RQ for the product.

LAND TRANSPORT :

Proper Shipping Name :	ENVIRONMENTALLY HAZARDOUS SUBSTANCE, LIQUID, N.O.S.
Technical Name(s) :	SODIUM BISULFITE
UN/ID No :	UN 3082
Hazard Class - Primary :	9
Packing Group :	III
Flash Point :	None
Reportable Quantity (per package) :	18,347 lbs
RQ Component :	SODIUM BISULFITE

AIR TRANSPORT (ICAO/IATA) :

The presence of an RQ component (Reportable Quantity for U.S. EPA and DOT) in this product causes it to be regulated with an additional description of RQ for road, or as a class 9 for road and air, ONLY when the net weight in the package exceeds the calculated RQ for the product.

Proper Shipping Name :	ENVIRONMENTALLY HAZARDOUS SUBSTANCE, LIQUID, N.O.S.
Technical Name(s) :	SODIUM BISULFITE
UN/ID No :	UN 3082
Hazard Class - Primary :	9
Packing Group :	III
Reportable Quantity (per package) :	18,347 lbs
RQ Component :	SODIUM BISULFITE

MARINE TRANSPORT (IMDG/IMO) :

Proper Shipping Name :	PRODUCT IS NOT REGULATED DURING TRANSPORTATION

15. REGULATORY INFORMATION

This section contains additional information that may have relevance to regulatory compliance. The information in this section is for reference only. It is not exhaustive, and should not be relied upon to take the place of an individualized compliance or hazard assessment. Nalco accepts no liability for the use of this information.

NATIONAL REGULATIONS, USA :

OSHA HAZARD COMMUNICATION RULE, 29 CFR 1910.1200 :
Based on our hazard evaluation, the following substance(s) in this product is/are hazardous and the reason(s) is/are shown below.

Sodium Bisulfite : Respiratory irritant
Potassium Bisulfite : Irritant
Cobalt Sulfate : Systemic Effect, Irritant, Cancer suspect agent (refer to Section 3)

CERCLA/SUPERFUND, 40 CFR 302 :
This product contains the following Reportable Quantity (RQ) Substance. Also listed is the RQ for the product. If a reportable quantity of product is released, it requires notification to the NATIONAL RESPONSE CENTER, WASHINGTON, D.C. (1-800-424-8802).

RQ Substance	RQ
Sodium Bisulfite	18,347 lbs

SARA/SUPERFUND AMENDMENTS AND REAUTHORIZATION ACT OF 1986 (TITLE III) - SECTIONS 302, 311, 312, AND 313 :

SECTION 302 - EXTREMELY HAZARDOUS SUBSTANCES (40 CFR 355) :
This product does not contain substances listed in Appendix A and B as an Extremely Hazardous Substance.

SECTIONS 311 AND 312 - MATERIAL SAFETY DATA SHEET REQUIREMENTS (40 CFR 370) :
Our hazard evaluation has found this product to be hazardous. The product should be reported under the following indicated EPA hazard categories:

X Immediate (Acute) Health Hazard

X	Delayed (Chronic) Health Hazard
-	Fire Hazard
-	Sudden Release of Pressure Hazard
-	Reactive Hazard

Under SARA 311 and 312, the EPA has established threshold quantities for the reporting of hazardous chemicals. The current thresholds are: 500 pounds or the threshold planning quantity (TPQ), whichever is lower, for extremely hazardous substances and 10,000 pounds for all other hazardous chemicals.

SECTION 313 - LIST OF TOXIC CHEMICALS (40 CFR 372) :
This product does not contain substances on the List of Toxic Chemicals.

TOXIC SUBSTANCES CONTROL ACT (TSCA) :
The substances in this preparation are included on or exempted from the TSCA 8(b) Inventory (40 CFR 710)

FOOD AND DRUG ADMINISTRATION (FDA) Federal Food, Drug and Cosmetic Act :
When use situations necessitate compliance with FDA regulations, this product is acceptable under : 21 CFR 173.310 Boiler Water Additives

Limitations: no more than required to produce intended technical effect.

NSF NON-FOOD COMPOUNDS REGISTRATION PROGRAM (former USDA List of Proprietary Substances & Non-Food Compounds) :
NSF Registration number for this product is : 141556
This product is acceptable for treating boilers or steam lines where steam produced may contact edible products and/or cooling systems where the treated water may not contact edible products in and around food processing areas, excluding such use in areas where meat and poultry are processed (G9).

This product has been certified as KOSHER/PAREVE for year-round use INCLUDING THE PASSOVER SEASON by the CHICAGO RABBINICAL COUNCIL.

FEDERAL WATER POLLUTION CONTROL ACT, CLEAN WATER ACT, 40 CFR 401.15 / formerly Sec. 307, 40 CFR 116.4 / formerly Sec. 311 :
This product contains the following substances listed in the regulation. Additional components may be unintentionally present at trace levels.

Substance(s)	Citations
• Sodium Bisulfite	Sec. 311

CLEAN AIR ACT, Sec. 112 (Hazardous Air Pollutants, as amended by 40 CFR 63), Sec. 602 (40 CFR 82, Class I and II Ozone Depleting Substances) :
This product may contain trace levels (<0.1% for carcinogens, <1% all other substances) of the following substance(s) listed under the regulation. Additional components may be unintentionally present at trace levels.

Substance(s)	Citations
• Cobalt Sulfate	Sec. 112

CALIFORNIA PROPOSITION 65 :
This material contains trace amounts of chemicals known to the State of California to cause cancer.

Substance(s)	Concentration	EFFECTS
• Cobalt Sulfate	< .1 %	Causes Cancer

MICHIGAN CRITICAL MATERIALS :
Substances listed under this regulation are not intentionally added or expected to be present in this product. Listed components may be present at trace levels.

STATE RIGHT TO KNOW LAWS :
The following substances are disclosed for compliance with State Right to Know Laws:

Sodium Bisulfite 7631-90-5

INTERNATIONAL CHEMICAL CONTROL LAWS :

CANADIAN ENVIRONMENTAL PROTECTION ACT (CEPA) :
The substance(s) in this preparation are included in or exempted from the Domestic Substance List (DSL).

AUSTRALIA
All substances in this product comply with the National Industrial Chemicals Notification & Assessment Scheme (NICNAS).

CHINA
All substances in this product comply with the Provisions on the Environmental Administration of New Chemical Substances and are listed on the Inventory of Existing Chemical Substances China (IECSC).

EUROPE
The substances in this preparation have been reviewed for compliance with the EINECS or ELINCS inventories.

JAPAN
All substances in this product comply with the Law Regulating the Manufacture and Importation Of Chemical Substances and are listed on the Existing and New Chemical Substances list (ENCS).

KOREA
All substances in this product comply with the Toxic Chemical Control Law (TCCL) and are listed on the Existing Chemicals List (ECL)

NEW ZEALAND
All substances in this product comply with the Hazardous Substances and New Organisms (HSNO) Act 1996,and are listed on or are exempt from the New Zealand Inventory of Chemicals.

PHILIPPINES
All substances in this product comply with the Republic Act 6969 (RA 6969) and are listed on the Philippines Inventory of Chemicals & Chemical Substances (PICCS).

16. OTHER INFORMATION

F100777

Due to our commitment to Product Stewardship, we have evaluated the human and environmental hazards and exposures of this product. Based on our recommended use of this product, we have characterized the product's general risk. This information should provide assistance for your own risk management practices. We have evaluated our product's risk as follows:

* The human risk is: Low

* The environmental risk is: Low

Any use inconsistent with our recommendations may affect the risk characterization. Our sales representative will assist you to determine if your product application is consistent with our recommendations. Together we can implement an appropriate risk management process.

This product material safety data sheet provides health and safety information. The product is to be used in applications consistent with our product literature. Individuals handling this product should be informed of the recommended safety precautions and should have access to this information. For any other uses, exposures should be evaluated so that appropriate handling practices and training programs can be established to insure safe workplace operations. Please consult your local sales representative for any further information.

REFERENCES

Threshold Limit Values for Chemical Substances and Physical Agents and Biological Exposure Indices, American Conference of Governmental Industrial Hygienists, OH., (Ariel Insight™ CD-ROM Version), Ariel Research Corp., Bethesda, MD.

Hazardous Substances Data Bank, National Library of Medicine, Bethesda, Maryland (TOMES CPS™ CD-ROM Version), Micromedex, Inc., Englewood, CO.

IARC Monographs on the Evaluation of the Carcinogenic Risk of Chemicals to Man, Geneva: World Health Organization, International Agency for Research on Cancer.

Integrated Risk Information System, U.S. Environmental Protection Agency, Washington, D.C. (TOMES CPS™ CD-ROM Version),
Micromedex, Inc., Englewood, CO.

Annual Report on Carcinogens, National Toxicology Program, U.S. Department of Health and Human Services, Public Health Service.

Title 29 Code of Federal Regulations, Part 1910, Subpart Z, Toxic and Hazardous Substances, Occupational Safety and Health Administration (OSHA), (Ariel Insight™ CD-ROM Version), Ariel Research Corp., Bethesda, MD.

Registry of Toxic Effects of Chemical Substances, National Institute for Occupational Safety and Health, Cincinnati, OH,
(TOMES CPS™ CD-ROM Version), Micromedex, Inc., Englewood, CO.

Ariel Insight™ (An integrated guide to industrial chemicals covered under major regulatory and advisory programs), North American Module, Western European Module, Chemical Inventories Module and the Generics Module (Ariel Insight™ CD-ROM Version), Ariel Research Corp., Bethesda, MD.

The Teratogen Information System, University of Washington, Seattle, WA (TOMES CPS™ CD-ROM Version), Micromedex, Inc., Englewood, CO.

Prepared By : Product Safety Department
Date issued : 01/12/2011
Version Number : 6.7

SAFETY DATA SHEET

PRODUCT

NALCO® 8735

EMERGENCY TELEPHONE NUMBER(S)

(800) 424-9300 (24 Hours) CHEMTREC

1. CHEMICAL PRODUCT AND COMPANY IDENTIFICATION

PRODUCT NAME : **NALCO® 8735**

APPLICATION : pH STABILIZER

COMPANY IDENTIFICATION : Nalco Company
1601 W. Diehl Road
Naperville, Illinois
60563-1198

EMERGENCY TELEPHONE NUMBER(S) : (800) 424-9300 (24 Hours) CHEMTREC

NFPA 704M/HMIS RATING
HEALTH : 3 / 3 FLAMMABILITY : 0 / 0 INSTABILITY : 1 / 1 OTHER :
0 = Insignificant 1 = Slight 2 = Moderate 3 = High 4 = Extreme * = Chronic Health Hazard

2. COMPOSITION/INFORMATION ON INGREDIENTS

Our hazard evaluation has identified the following chemical substance(s) as hazardous. Consult Section 15 for the nature of the hazard(s).

Hazardous Substance(s)	CAS NO	% (w/w)
Sodium Hydroxide	1310-73-2	30.0 - 60.0
Potassium Hydroxide	1310-58-3	10.0 - 30.0

3. HAZARDS IDENTIFICATION

****EMERGENCY OVERVIEW****

DANGER
Corrosive. May cause tissue damage.
Do not get in eyes, on skin, on clothing. Do not take internally. Use with adequate ventilation. In case of contact with eyes, rinse immediately with plenty of water and seek medical advice. After contact with skin, wash immediately with plenty of water.
Wear a face shield. Wear chemical resistant apron, chemical splash goggles, impervious gloves and boots.
Not flammable or combustible. Contact with reactive metals (e.g. aluminum) may result in the generation of flammable hydrogen gas.

PRIMARY ROUTES OF EXPOSURE :
Eye, Skin

HUMAN HEALTH HAZARDS - ACUTE :

EYE CONTACT :
Corrosive. Will cause eye burns and permanent tissue damage.

SKIN CONTACT :
Corrosive; causes permanent skin damage.

INGESTION :
Corrosive; causes chemical burns to the mouth, throat and stomach.

INHALATION :
Elevated temperatures or mechanical action may form vapors, mists or fumes which may be irritating to the eyes, nose, throat and lungs.

AGGRAVATION OF EXISTING CONDITIONS :
A review of available data does not identify any worsening of existing conditions.

HUMAN HEALTH HAZARDS - CHRONIC :
No adverse effects expected other than those mentioned above.

4. FIRST AID MEASURES

EYE CONTACT :
Immediately flush eye with water for at least 15 minutes while holding eyelids open. PROMPT ACTION IS ESSENTIAL IN CASE OF CONTACT. Get immediate medical attention.

SKIN CONTACT :
Immediately flush with plenty of water for at least 15 minutes. Use a mild soap if available. For a large splash, flood body under a shower. Get immediate medical attention. Contaminated clothing, shoes, and leather goods must be discarded or cleaned before re-use.

INGESTION :
Get immediate medical attention. DO NOT INDUCE VOMITING. If conscious, washout mouth and give water to drink.

INHALATION :
Remove to fresh air, treat symptomatically. Get immediate medical attention.

NOTE TO PHYSICIAN :
Probable mucosal damage may contraindicate the use of gastric lavage. Based on the individual reactions of the patient, the physician's judgement should be used to control symptoms and clinical condition.

5. FIRE FIGHTING MEASURES

FLASH POINT : None

EXTINGUISHING MEDIA :
Not expected to burn. Use extinguishing media appropriate for surrounding fire.

FIRE AND EXPLOSION HAZARD :
Not flammable or combustible. Contact with reactive metals (e.g. aluminum) may result in the generation of flammable hydrogen gas.

SPECIAL PROTECTIVE EQUIPMENT FOR FIRE FIGHTING :
In case of fire, wear a full face positive-pressure self contained breathing apparatus and protective suit.

6. ACCIDENTAL RELEASE MEASURES

PERSONAL PRECAUTIONS :
Restrict access to area as appropriate until clean-up operations are complete. Use personal protective equipment recommended in Section 8 (Exposure Controls/Personal Protection). Stop or reduce any leaks if it is safe to do so. Keep people away from and upwind of spill/leak. Ventilate spill area if possible. Ensure clean-up is conducted by trained personnel only. Do not touch spilled material. Have emergency equipment (for fires, spills, leaks, etc.) readily available. Notify appropriate government, occupational health and safety and environmental authorities.

METHODS FOR CLEANING UP :
SMALL SPILLS: Soak up spill with absorbent material. Place residues in a suitable, covered, properly labeled container. Wash affected area. LARGE SPILLS: Contain liquid using absorbent material, by digging trenches or by diking. Reclaim into recovery or salvage drums or tank truck for proper disposal. Clean contaminated surfaces with water or aqueous cleaning agents. Contact an approved waste hauler for disposal of contaminated recovered material. Dispose of material in compliance with regulations indicated in Section 13 (Disposal Considerations).

ENVIRONMENTAL PRECAUTIONS :
Do not contaminate surface water.

7. HANDLING AND STORAGE

HANDLING :
Do not get in eyes, on skin, on clothing. Do not take internally. Use with adequate ventilation. Do not breathe vapors/gases/dust. Keep the containers closed when not in use. Have emergency equipment (for fires, spills, leaks, etc.) readily available. Ensure all containers are labeled. Do not mix with acids.

STORAGE CONDITIONS :
Store the containers tightly closed. Store separately from acids. Store in suitable labeled containers.

SUITABLE CONSTRUCTION MATERIAL :
Stainless Steel 304, Stainless Steel 316L, Hastelloy C-276, Buna-N, Nylon, Polyethylene, Polypropylene, PVC, HDPE (high density polyethylene), Plexiglass, PTFE, Perfluoroelastomer, Polytetrafluoroethylene/polypropylene copolymer, Chlorosulfonated polyethylene rubber, Compatibility with Plastic Materials can vary; we therefore recommend that compatibility is tested prior to use.

UNSUITABLE CONSTRUCTION MATERIAL :
Aluminum, Mild steel, Natural rubber, Brass, Copper, Ethylene propylene, Neoprene, Polyurethane, Fluoroelastomer

8. EXPOSURE CONTROLS/PERSONAL PROTECTION

OCCUPATIONAL EXPOSURE LIMITS :
Exposure guidelines have not been established for this product. Available exposure limits for the substance(s) are shown below.

Sodium Hydroxide	ACGIH/Ceiling	2

	OSHA Z1/PEL	2
Potassium Hydroxide	ACGIH/Ceiling	2

ENGINEERING MEASURES :
General ventilation is recommended. Use local exhaust ventilation if necessary to control airborne mist and vapor.

RESPIRATORY PROTECTION :
Where concentrations in air may exceed the limits given in this section or when significant mists, vapors, aerosols, or dusts are generated, an approved air purifying respirator equipped with suitable filter cartridges is recommended. Consult the respirator / cartridge manufacturer data to verify the suitability of specific devices. In event of emergency or planned entry into unknown concentrations a positive pressure, full-facepiece SCBA should be used. If respiratory protection is required, institute a complete respiratory protection program including selection, fit testing, training, maintenance and inspection.

HAND PROTECTION :
When handling this product, the use of chemical gauntlets is recommended. The choice of work glove depends on work conditions and what chemicals are handled. Please contact the PPE manufacturer for advice on what type of glove material may be suitable. Gloves should be replaced immediately if signs of degradation are observed.

SKIN PROTECTION :
Wear chemical resistant apron, chemical splash goggles, impervious gloves and boots. A full slicker suit is recommended if gross exposure is possible.

EYE PROTECTION :
Wear a face shield with chemical splash goggles.

HYGIENE RECOMMENDATIONS :
Use good work and personal hygiene practices to avoid exposure. Eye wash station and safety shower are necessary. If clothing is contaminated, remove clothing and thoroughly wash the affected area. Launder contaminated clothing before reuse. Always wash thoroughly after handling chemicals. When handling this product never eat, drink or smoke.

HUMAN EXPOSURE CHARACTERIZATION :
Based on our recommended product application and personal protective equipment, the potential human exposure is: Low

9. PHYSICAL AND CHEMICAL PROPERTIES

PHYSICAL STATE	Liquid
APPEARANCE	Colorless
ODOR	None
SPECIFIC GRAVITY	1.50 - 1.53 @ 60 °F / 15.6 °C
DENSITY	12.5 - 12.7 lb/gal
SOLUBILITY IN WATER	Complete

pH (5 %)	14
FREEZING POINT	-10 °F / -23 °C
BOILING POINT	293 °F / 145 °C
VAPOR PRESSURE	0.5 mm Hg @ 100 °F / 37.7 °C
VOC CONTENT	0 % Calculated

Note: These physical properties are typical values for this product and are subject to change.

10. STABILITY AND REACTIVITY

STABILITY :
Stable under normal conditions.

HAZARDOUS POLYMERIZATION :
Hazardous polymerization will not occur.

CONDITIONS TO AVOID :
Extremes of temperature

MATERIALS TO AVOID :
Contact with strong acids (e.g. sulfuric, phosphoric, nitric, hydrochloric, chromic, sulfonic) may generate heat, splattering or boiling and toxic vapors. Gives off hydrogen by reaction with metals.

HAZARDOUS DECOMPOSITION PRODUCTS :
Under fire conditions: None known

11. TOXICOLOGICAL INFORMATION

The following results are for the hazardous components.

ACUTE ORAL TOXICITY :
Species: Rat
LD50: 205 mg/kg
Test Descriptor: Potassium Hydroxide

ACUTE DERMAL TOXICITY :
Species: Rabbit
LD50: 1,260 mg/kg
Test Descriptor: Potassium Hydroxide

SENSITIZATION :
This product is not expected to be a sensitizer.

CARCINOGENICITY :
None of the substances in this product are listed as carcinogens by the International Agency for Research on Cancer (IARC), the National Toxicology Program (NTP) or the American Conference of Governmental Industrial Hygienists (ACGIH).

HUMAN HAZARD CHARACTERIZATION :
Based on our hazard characterization, the potential human hazard is: High

12. ECOLOGICAL INFORMATION

ECOTOXICOLOGICAL EFFECTS :

The following results are for the product, unless otherwise indicated.

ACUTE FISH RESULTS :

Species	Exposure	LC50	Test Descriptor
Fathead Minnow	96 hrs	102 mg/l	Similar Product
Mosquito Fish (Gambusia spp.)	96 hrs	125 mg/l	Active Substance

ACUTE INVERTEBRATE RESULTS :

Species	Exposure	LC50	EC50	Test Descriptor
Daphnia magna	48 hrs	180 mg/l		Similar Product
Daphnia magna	48 hrs	156 mg/l		Active Substance

PERSISTENCY AND DEGRADATION :

Biological Oxygen Demand (BOD) :

Incubation Period	Value	Test Descriptor
5 d	0 mg/l	Product

The product does not contain any organic substances.

MOBILITY :
The environmental fate was estimated using a level III fugacity model embedded in the EPI (estimation program interface) Suite TM, provided by the US EPA. The model assumes a steady state condition between the total input and output. The level III model does not require equilibrium between the defined media. The information provided is intended to give the user a general estimate of the environmental fate of this product under the defined conditions of the models.
If released into the environment this material is expected to distribute to the air, water and soil/sediment in the approximate respective percentages;

Air	Water	Soil/Sediment
<5%	30 - 50%	50 - 70%

The portion in water is expected to be soluble or dispersible.

BIOACCUMULATION POTENTIAL
This preparation or material is not expected to bioaccumulate.

ENVIRONMENTAL HAZARD AND EXPOSURE CHARACTERIZATION
Based on our hazard characterization, the potential environmental hazard is: Low
Based on our recommended product application and the product's characteristics, the potential environmental exposure is: High

If released into the environment, see CERCLA/SUPERFUND in Section 15.

13. DISPOSAL CONSIDERATIONS

If this product becomes a waste, it could meet the criteria of a hazardous waste as defined by the Resource Conservation and Recovery Act (RCRA) 40 CFR 261. Before disposal, it should be determined if the waste meets the criteria of a hazardous waste.

Hazardous Waste: D002

Hazardous wastes must be transported by a licensed hazardous waste transporter and disposed of or treated in a properly licensed hazardous waste treatment, storage, disposal or recycling facility. Consult local, state, and federal regulations for specific requirements.

14. TRANSPORT INFORMATION

The information in this section is for reference only and should not take the place of a shipping paper (bill of lading) specific to an order. Please note that the proper Shipping Name / Hazard Class may vary by packaging, properties, and mode of transportation. Typical Proper Shipping Names for this product are as follows.

The presence of an RQ component (Reportable Quantity for U.S. EPA and DOT) in this product causes it to be regulated with an additional description of RQ for road, or as a class 9 for road and air, ONLY when the net weight in the package exceeds the calculated RQ for the product.

LAND TRANSPORT :

Proper Shipping Name :	CAUSTIC ALKALI LIQUID, N.O.S.
Technical Name(s) :	SODIUM HYDROXIDE, POTASSIUM HYDROXIDE
UN/ID No :	UN 1719
Hazard Class - Primary :	8
Packing Group :	II
Flash Point :	None
Reportable Quantity (per package) :	3,000 lbs
RQ Component :	SODIUM HYDROXIDE

AIR TRANSPORT (ICAO/IATA) :

The presence of an RQ component (Reportable Quantity for U.S. EPA and DOT) in this product causes it to be regulated with an additional description of RQ for road, or as a class 9 for road and air, ONLY when the net weight in the package exceeds the calculated RQ for the product.

Proper Shipping Name :	CAUSTIC ALKALI LIQUID, N.O.S.
Technical Name(s) :	SODIUM HYDROXIDE, POTASSIUM HYDROXIDE
UN/ID No :	UN 1719
Hazard Class - Primary :	8
Packing Group :	II
Reportable Quantity (per package) :	3,000 lbs
RQ Component :	SODIUM HYDROXIDE

MARINE TRANSPORT (IMDG/IMO) :

Proper Shipping Name :	CAUSTIC ALKALI LIQUID, N.O.S.
Technical Name(s) :	SODIUM HYDROXIDE, POTASSIUM HYDROXIDE
UN/ID No :	UN 1719
Hazard Class - Primary :	8
Packing Group :	II

15. REGULATORY INFORMATION

This section contains additional information that may have relevance to regulatory compliance. The information in this section is for reference only. It is not exhaustive, and should not be relied upon to take the place of an individualized compliance or hazard assessment. Nalco accepts no liability for the use of this information.

NATIONAL REGULATIONS, USA :

OSHA HAZARD COMMUNICATION RULE, 29 CFR 1910.1200 :
Based on our hazard evaluation, the following substance(s) in this product is/are hazardous and the reason(s) is/are shown below.

Sodium Hydroxide : Corrosive
Potassium Hydroxide : Corrosive, HARMFUL

CERCLA/SUPERFUND, 40 CFR 302 :
This product contains the following Reportable Quantity (RQ) Substance. Also listed is the RQ for the product. If a reportable quantity of product is released, it requires notification to the NATIONAL RESPONSE CENTER, WASHINGTON, D.C. (1-800-424-8802).

RQ Substance	RQ
Sodium Hydroxide	3,000 lbs

SARA/SUPERFUND AMENDMENTS AND REAUTHORIZATION ACT OF 1986 (TITLE III) - SECTIONS 302, 311, 312, AND 313 :

SECTION 302 - EXTREMELY HAZARDOUS SUBSTANCES (40 CFR 355) :
This product does not contain substances listed in Appendix A and B as an Extremely Hazardous Substance.

SECTIONS 311 AND 312 - MATERIAL SAFETY DATA SHEET REQUIREMENTS (40 CFR 370) :
Our hazard evaluation has found this product to be hazardous. The product should be reported under the following indicated EPA hazard categories:

X	Immediate (Acute) Health Hazard
-	Delayed (Chronic) Health Hazard
-	Fire Hazard
-	Sudden Release of Pressure Hazard
-	Reactive Hazard

Under SARA 311 and 312, the EPA has established threshold quantities for the reporting of hazardous chemicals. The current thresholds are: 500 pounds or the threshold planning quantity (TPQ), whichever is lower, for extremely hazardous substances and 10,000 pounds for all other hazardous chemicals.

SECTION 313 - LIST OF TOXIC CHEMICALS (40 CFR 372) :
This product does not contain substances on the List of Toxic Chemicals.

TOXIC SUBSTANCES CONTROL ACT (TSCA) :
The substances in this preparation are included on or exempted from the TSCA 8(b) Inventory (40 CFR 710)

FOOD AND DRUG ADMINISTRATION (FDA) Federal Food, Drug and Cosmetic Act :
When use situations necessitate compliance with FDA regulations, this product is acceptable under : 21 CFR 173.310 Boiler Water Additives

Limitations: no more than required to produce intended technical effect.

NSF NON-FOOD COMPOUNDS REGISTRATION PROGRAM (former USDA List of Proprietary Substances & Non-Food Compounds) :
NSF Registration number for this product is : 062440
This product is acceptable as a compound for the treatment of entire potable water systems (G1) in official establishments in and around food processing areas. This product is acceptable for treatment of cooling and retort water (G5) in and around food processing areas. This product is acceptable for use in meat, poultry, and other food processing areas as a Boiler Treatment Product (G6), for treating boiler and steam lines where the steam produced may contact edible products. Acceptable usage shall be in accordance with the dosage limitations specified on the product label.

This product has been certified as KOSHER/PAREVE for year-round use INCLUDING THE PASSOVER SEASON by the CHICAGO RABBINICAL COUNCIL.

FEDERAL WATER POLLUTION CONTROL ACT, CLEAN WATER ACT, 40 CFR 401.15 / formerly Sec. 307, 40 CFR 116.4 / formerly Sec. 311 :
This product contains the following substances listed in the regulation. Additional components may be unintentionally present at trace levels.

Substance(s)	Citations
• Sodium Hydroxide • Potassium Hydroxide	Sec. 311

CLEAN AIR ACT, Sec. 112 (Hazardous Air Pollutants, as amended by 40 CFR 63), Sec. 602 (40 CFR 82, Class I and II Ozone Depleting Substances) :
Substances listed under this regulation are not intentionally added or expected to be present in this product. Listed components may be present at trace levels.

CALIFORNIA PROPOSITION 65 :
Substances listed under California Proposition 65 are not intentionally added or expected to be present in this product.

MICHIGAN CRITICAL MATERIALS :
Substances listed under this regulation are not intentionally added or expected to be present in this product. Listed components may be present at trace levels.

STATE RIGHT TO KNOW LAWS :
The following substances are disclosed for compliance with State Right to Know Laws:

Potassium Hydroxide	1310-58-3
Sodium Hydroxide	1310-73-2

INTERNATIONAL CHEMICAL CONTROL LAWS :

CANADIAN ENVIRONMENTAL PROTECTION ACT (CEPA) :
The substance(s) in this preparation are included in or exempted from the Domestic Substance List (DSL).

AUSTRALIA
All substances in this product comply with the National Industrial Chemicals Notification & Assessment Scheme (NICNAS).

CHINA
All substances in this product comply with the Provisions on the Environmental Administration of New Chemical Substances and are listed on the Inventory of Existing Chemical Substances China (IECSC).

EUROPE
The substance(s) in this preparation are included in or exempted from the EINECS or ELINCS inventories

JAPAN
All substances in this product comply with the Law Regulating the Manufacture and Importation Of Chemical Substances and are listed on the Existing and New Chemical Substances list (ENCS).

KOREA
All substances in this product comply with the Toxic Chemical Control Law (TCCL) and are listed on the Existing Chemicals List (ECL)

NEW ZEALAND
All substances in this product comply with the Hazardous Substances and New Organisms (HSNO) Act 1996,and are listed on or are exempt from the New Zealand Inventory of Chemicals.

PHILIPPINES
All substances in this product comply with the Republic Act 6969 (RA 6969) and are listed on the Philippines Inventory of Chemicals & Chemical Substances (PICCS).

16. OTHER INFORMATION

Due to our commitment to Product Stewardship, we have evaluated the human and environmental hazards and exposures of this product. Based on our recommended use of this product, we have characterized the product's general risk. This information should provide assistance for your own risk management practices. We have evaluated our product's risk as follows:

* The human risk is: Low

* The environmental risk is: Low

Any use inconsistent with our recommendations may affect the risk characterization. Our sales representative will assist you to determine if your product application is consistent with our recommendations. Together we can implement an appropriate risk management process.

This product material safety data sheet provides health and safety information. The product is to be used in applications consistent with our product literature. Individuals handling this product should be informed of the recommended safety precautions and should have access to this information. For any other uses, exposures should be evaluated so that appropriate handling practices and training programs can be established to insure safe workplace operations. Please consult your local sales representative for any further information.

REFERENCES

Threshold Limit Values for Chemical Substances and Physical Agents and Biological Exposure Indices, American Conference of Governmental Industrial Hygienists, OH., (Ariel Insight™ CD-ROM Version), Ariel Research Corp., Bethesda, MD.

Hazardous Substances Data Bank, National Library of Medicine, Bethesda, Maryland (TOMES CPS™ CD-ROM Version), Micromedex, Inc., Englewood, CO.

IARC Monographs on the Evaluation of the Carcinogenic Risk of Chemicals to Man, Geneva: World Health Organization, International Agency for Research on Cancer.

Integrated Risk Information System, U.S. Environmental Protection Agency, Washington, D.C. (TOMES CPS™ CD-ROM Version),
Micromedex, Inc., Englewood, CO.

Annual Report on Carcinogens, National Toxicology Program, U.S. Department of Health and Human Services, Public Health Service.

Title 29 Code of Federal Regulations, Part 1910, Subpart Z, Toxic and Hazardous Substances, Occupational Safety and Health Administration (OSHA), (Ariel Insight™ CD-ROM Version), Ariel Research Corp., Bethesda, MD.

Registry of Toxic Effects of Chemical Substances, National Institute for Occupational Safety and Health, Cincinnati, OH,
(TOMES CPS™ CD-ROM Version), Micromedex, Inc., Englewood, CO.

Ariel Insight™ (An integrated guide to industrial chemicals covered under major regulatory and advisory programs), North American Module, Western European Module, Chemical Inventories Module and the Generics Module (Ariel Insight™ CD-ROM Version), Ariel Research Corp., Bethesda, MD.

The Teratogen Information System, University of Washington, Seattle, WA (TOMES CPS™ CD-ROM Version), Micromedex, Inc., Englewood, CO.

Prepared By : Product Safety Department
Date issued : 01/21/2011
Version Number : 1.16

MATERIAL SAFETY DATA SHEET

PRODUCT

NexGuard 22310

EMERGENCY TELEPHONE NUMBER(S)

(800) 424-9300 (24 Hours) CHEMTREC

1. CHEMICAL PRODUCT AND COMPANY IDENTIFICATION

PRODUCT NAME : **NexGuard 22310**

APPLICATION : BOILER WATER INTERNAL TREATMENT

COMPANY IDENTIFICATION : Nalco Company
1601 W. Diehl Road
Naperville, Illinois
60563-1198

EMERGENCY TELEPHONE NUMBER(S) : (800) 424-9300 (24 Hours) CHEMTREC

NFPA 704M/HMIS RATING
HEALTH : 0 / 1 FLAMMABILITY : 1 / 1 INSTABILITY : 0 / 0 OTHER :
0 = Insignificant 1 = Slight 2 = Moderate 3 = High 4 = Extreme

2. COMPOSITION/INFORMATION ON INGREDIENTS

Our hazard evaluation has found that this product is not hazardous under 29 CFR 1910.1200.

3. HAZARDS IDENTIFICATION

****EMERGENCY OVERVIEW****

CAUTION
May cause irritation with prolonged contact.
Do not get in eyes, on skin, on clothing. Do not take internally. Use with adequate ventilation. In case of contact with eyes, rinse immediately with plenty of water and seek medical advice. After contact with skin, wash immediately with plenty of water.
Wear suitable protective clothing.
May evolve oxides of carbon (COx) under fire conditions. May evolve oxides of sulfur (SOx) under fire conditions.

PRIMARY ROUTES OF EXPOSURE :
Eye, Skin

HUMAN HEALTH HAZARDS - ACUTE :

EYE CONTACT :
May cause irritation with prolonged contact.

SKIN CONTACT :
May cause irritation with prolonged contact.

INGESTION :
Not a likely route of exposure. No adverse effects expected.

INHALATION :
Not a likely route of exposure. No adverse effects expected.

SYMPTOMS OF EXPOSURE :
Acute :
A review of available data does not identify any symptoms from exposure not previously mentioned.
Chronic :
A review of available data does not identify any symptoms from exposure not previously mentioned.

AGGRAVATION OF EXISTING CONDITIONS :
A review of available data does not identify any worsening of existing conditions.

4. FIRST AID MEASURES

EYE CONTACT :
Flush affected area with water. If symptoms develop, seek medical advice.

SKIN CONTACT :
Flush affected area with water. If symptoms develop, seek medical advice.

INGESTION :
Do not induce vomiting without medical advice. If conscious, washout mouth and give water to drink. If symptoms develop, seek medical advice.

INHALATION :
Remove to fresh air, treat symptomatically. If symptoms develop, seek medical advice.

NOTE TO PHYSICIAN :
Based on the individual reactions of the patient, the physician's judgement should be used to control symptoms and clinical condition.

5. FIRE FIGHTING MEASURES

FLASH POINT : None

EXTINGUISHING MEDIA :
This product would not be expected to burn unless all the water is boiled away. The remaining organics may be ignitable. Use extinguishing media appropriate for surrounding fire.

FIRE AND EXPLOSION HAZARD :
May evolve oxides of carbon (COx) under fire conditions. May evolve oxides of sulfur (SOx) under fire conditions.

SPECIAL PROTECTIVE EQUIPMENT FOR FIRE FIGHTING :
In case of fire, wear a full face positive-pressure self contained breathing apparatus and protective suit.

6. ACCIDENTAL RELEASE MEASURES

PERSONAL PRECAUTIONS :
Restrict access to area as appropriate until clean-up operations are complete. Stop or reduce any leaks if it is safe to do so. Do not touch spilled material. Ventilate spill area if possible. Use personal protective equipment recommended in Section 8 (Exposure Controls/Personal Protection).

METHODS FOR CLEANING UP :
SMALL SPILLS: Soak up spill with absorbent material. Place residues in a suitable, covered, properly labeled container. Wash affected area. LARGE SPILLS: Contain liquid using absorbent material, by digging trenches or by diking. Reclaim into recovery or salvage drums or tank truck for proper disposal. Contact an approved waste hauler for disposal of contaminated recovered material. Dispose of material in compliance with regulations indicated in Section 13 (Disposal Considerations).

ENVIRONMENTAL PRECAUTIONS :
Do not contaminate surface water.

7. HANDLING AND STORAGE

HANDLING :
Avoid eye and skin contact. Do not take internally. Ensure all containers are labelled. Keep the containers closed when not in use.

STORAGE CONDITIONS :
Protect product from freezing. Store the containers tightly closed.

SUITABLE CONSTRUCTION MATERIAL :
PVC, Stainless Steel 304, EPDM, Buna-N, HDPE (high density polyethylene), Polyurethane, Hypalon, Viton, Neoprene, Polypropylene, Polyethylene, Stainless Steel 316L, 100% phenolic resin liner

UNSUITABLE CONSTRUCTION MATERIAL :
Brass, Mild steel, Epoxy phenolic resin

8. EXPOSURE CONTROLS/PERSONAL PROTECTION

OCCUPATIONAL EXPOSURE LIMITS :
This product does not contain any substance that has an established exposure limit.

ENGINEERING MEASURES :
General ventilation is recommended.

RESPIRATORY PROTECTION :
Respiratory protection is not normally needed.

HAND PROTECTION :
Neoprene gloves, Nitrile gloves, Butyl gloves, PVC gloves

SKIN PROTECTION :
Wear standard protective clothing.

EYE PROTECTION :
Wear chemical splash goggles.

HYGIENE RECOMMENDATIONS :
Keep an eye wash fountain available. Keep a safety shower available. If clothing is contaminated, remove clothing and thoroughly wash the affected area. Launder contaminated clothing before reuse.

HUMAN EXPOSURE CHARACTERIZATION :
Based on our recommended product application and personal protective equipment, the potential human exposure is: Moderate

9. PHYSICAL AND CHEMICAL PROPERTIES

PHYSICAL STATE	Liquid
APPEARANCE	Fluorescent Orange Yellow
ODOR	Normally None, however residual ammonia may be present in headspace of newly opened containers

SPECIFIC GRAVITY	1.19 @ 77 °F / 25 °C
DENSITY	9.9 lb/gal
SOLUBILITY IN WATER	Complete
pH (100 %)	10.5
FREEZING POINT	22 °F / -6 °C
VAPOR PRESSURE	Same as water
VOC CONTENT	0 % Calculated

Note: These physical properties are typical values for this product and are subject to change.

10. STABILITY AND REACTIVITY

STABILITY :
Stable under normal conditions.

HAZARDOUS POLYMERIZATION :
Hazardous polymerization will not occur.

CONDITIONS TO AVOID :
Freezing temperatures.

MATERIALS TO AVOID :
Contact with strong oxidizers (e.g. chlorine, peroxides, chromates, nitric acid, perchlorate, concentrated oxygen, permanganate) may generate heat, fires, explosions and/or toxic vapors.

HAZARDOUS DECOMPOSITION PRODUCTS :
Under fire conditions: Oxides of carbon, Oxides of sulfur

11. TOXICOLOGICAL INFORMATION

No toxicity studies have been conducted on this product.

SENSITIZATION :
This product is not expected to be a sensitizer.

CARCINOGENICITY :
None of the substances in this product are listed as carcinogens by the International Agency for Research on Cancer (IARC), the National Toxicology Program (NTP) or the American Conference of Governmental Industrial Hygienists (ACGIH).

HUMAN HAZARD CHARACTERIZATION :
Based on our hazard characterization, the potential human hazard is: Low

12. ECOLOGICAL INFORMATION

ECOTOXICOLOGICAL EFFECTS :

The following results are for the product.

ACUTE FISH RESULTS :

Species	Exposure	LC50	Test Descriptor
Rainbow Trout	96 hrs	7,070 mg/l	Product
Fathead Minnow	96 hrs	1,086 mg/l	Product
Inland Silverside	96 hrs	> 5,000 mg/l	Product

ACUTE INVERTEBRATE RESULTS :

Species	Exposure	LC50	EC50	Test Descriptor
Daphnia magna	48 hrs	1,650 mg/l		Product
Mysid Shrimp (Mysidopsis bahia)	96 hrs	> 5,000 mg/l		Product

MOBILITY :
The environmental fate was estimated using a level III fugacity model embedded in the EPI (estimation program interface) Suite TM , provided by the US EPA. The model assumes a steady state condition between the total input and output. The level III model does not require equilibrium between the defined media. The information provided is intended to give the user a general estimate of the environmental fate of this product under the defined conditions of the models. If released into the environment this material is expected to distribute to the air, water and soil/sediment in the approximate respective percentages;

Air	Water	Soil/Sediment
<5%	30 - 50%	50 - 70%

The portion in water is expected to be soluble or dispersible.

BIOACCUMULATION POTENTIAL
This preparation or material is not expected to bioaccumulate.

ENVIRONMENTAL HAZARD AND EXPOSURE CHARACTERIZATION
Based on our hazard characterization, the potential environmental hazard is: Low
Based on our recommended product application and the product's characteristics, the potential environmental exposure is: Moderate

If released into the environment, see CERCLA/SUPERFUND in Section 15.

13. DISPOSAL CONSIDERATIONS

If this product becomes a waste, it is not a hazardous waste as defined by the Resource Conservation and Recovery Act (RCRA) 40 CFR 261, since it does not have the characteristics of Subpart C, nor is it listed under Subpart D.

As a non-hazardous waste, it is not subject to federal regulation. Consult state or local regulation for any additional handling, treatment or disposal requirements. For disposal, contact a properly licensed waste treatment, storage, disposal or recycling facility.

14. TRANSPORT INFORMATION

The information in this section is for reference only and should not take the place of a shipping paper (bill of lading) specific to an order. Please note that the proper Shipping Name / Hazard Class may vary by packaging, properties, and mode of transportation. Typical Proper Shipping Names for this product are as follows.

LAND TRANSPORT :

Proper Shipping Name : PRODUCT IS NOT REGULATED DURING TRANSPORTATION

AIR TRANSPORT (ICAO/IATA) :

Proper Shipping Name : PRODUCT IS NOT REGULATED DURING TRANSPORTATION

MARINE TRANSPORT (IMDG/IMO) :

Proper Shipping Name : PRODUCT IS NOT REGULATED DURING TRANSPORTATION

15. REGULATORY INFORMATION

NATIONAL REGULATIONS, USA :

OSHA HAZARD COMMUNICATION RULE, 29 CFR 1910.1200 :
Our hazard evaluation has found that this product is not hazardous under 29 CFR 1910.1200.

CERCLA/SUPERFUND, 40 CFR 117, 302 :
Notification of spills of this product is not required.

SARA/SUPERFUND AMENDMENTS AND REAUTHORIZATION ACT OF 1986 (TITLE III) - SECTIONS 302, 311, 312, AND 313 :

SECTION 302 - EXTREMELY HAZARDOUS SUBSTANCES (40 CFR 355) :
This product does not contain substances listed in Appendix A and B as an Extremely Hazardous Substance.

SECTIONS 311 AND 312 - MATERIAL SAFETY DATA SHEET REQUIREMENTS (40 CFR 370) :
Our hazard evaluation has found that this product is not hazardous under 29 CFR 1910.1200.

- Immediate (Acute) Health Hazard
- Delayed (Chronic) Health Hazard
- Fire Hazard
- Sudden Release of Pressure Hazard
- Reactive Hazard

Under SARA 311 and 312, the EPA has established threshold quantities for the reporting of hazardous chemicals. The current thresholds are: 500 pounds or the threshold planning quantity (TPQ), whichever is lower, for extremely hazardous substances and 10,000 pounds for all other hazardous chemicals.

SECTION 313 - LIST OF TOXIC CHEMICALS (40 CFR 372) :
This product does not contain substances on the List of Toxic Chemicals.

TOXIC SUBSTANCES CONTROL ACT (TSCA) :
The substances in this preparation are included on or exempted from the TSCA 8(b) Inventory (40 CFR 710)

FOOD AND DRUG ADMINISTRATION (FDA) Federal Food, Drug and Cosmetic Act :
When use situations necessitate compliance with FDA regulations, this product is acceptable under : This product is in full compliance with the applicable Federal laws and regulations pertaining to food additives and may be used for applications covered under 21 CFR 173.310 Boiler Water Additives (steam from treated boilers may contact food). A copy of FDA's acknowledgement of Nalco's effective notification is available on the FDA website at: http://vm.cfsan.fda.gov/~dms/opa-fcn.html, FCN000105 and FCN000031.

The following limitations apply:

Maximum dosage	Limitation
93 PPM	in the boiler feedwater

The polymer must not be used at pressures above 1,000 PSIG (147 kPa).

NSF NON-FOOD COMPOUNDS REGISTRATION PROGRAM (former USDA List of Proprietary Substances & Non-Food Compounds) :
NSF Registration number for this product is : 121221
This product is acceptable for use in meat, poultry, and other food processing areas as a Boiler Treatment Product (G6), for treating boiler and steam lines where the steam produced may contact edible products. Acceptable usage shall be in accordance with the dosage limitations specified on the product label.

This product has been certified as KOSHER/PAREVE for year-round use INCLUDING THE PASSOVER SEASON by the CHICAGO RABBINICAL COUNCIL.

FEDERAL WATER POLLUTION CONTROL ACT, CLEAN WATER ACT, 40 CFR 401.15 / formerly Sec. 307, 40 CFR 116.4 / formerly Sec. 311 :
None of the substances are specifically listed in the regulation.

CLEAN AIR ACT, Sec. 111 (40 CFR 60, Volatile Organic Compounds), Sec. 112 (40 CFR 61, Hazardous Air Pollutants), Sec. 602 (40 CFR 82, Class I and II Ozone Depleting Substances) :
None of the substances are specifically listed in the regulation.

CALIFORNIA PROPOSITION 65 :
This product does not contain substances which require warning under California Proposition 65.

MICHIGAN CRITICAL MATERIALS :
None of the substances are specifically listed in the regulation.

STATE RIGHT TO KNOW LAWS :
The following substances are disclosed for compliance with State Right to Know Laws:

Sodium Sulfate	7757-82-6
Inorganic Solvent	Proprietary

NATIONAL REGULATIONS, CANADA :

WORKPLACE HAZARDOUS MATERIALS INFORMATION SYSTEM (WHMIS) :
This product has been classified in accordance with the hazard criteria of the Controlled Products Regulations (CPR) and the MSDS contains all the information required by the CPR.

WHMIS CLASSIFICATION :
Not considered a WHMIS controlled product.

CANADIAN ENVIRONMENTAL PROTECTION ACT (CEPA) :
The substances in this preparation are listed on the Domestic Substances List (DSL), are exempt, or have been reported in accordance with the New Substances Notification Regulations.

INTERNATIONAL CHEMICAL CONTROL LAWS

EUROPE
The substance(s) in this preparation are included in or exempted from the EINECS or ELINCS inventories

16. OTHER INFORMATION

Nalco Internal Number F105654

Due to our commitment to Product Stewardship, we have evaluated the human and environmental hazards and exposures of this product. Based on our recommended use of this product, we have characterized the product's general risk. This information should provide assistance for your own risk management practices. We have evaluated our product's risk as follows:

* The human risk is: Low

* The environmental risk is: Low

Any use inconsistent with our recommendations may affect the risk characterization. Our sales representative will assist you to determine if your product application is consistent with our recommendations. Together we can implement an appropriate risk management process.

This product material safety data sheet provides health and safety information. The product is to be used in applications consistent with our product literature. Individuals handling this product should be informed of the recommended safety precautions and should have access to this information. For any other uses, exposures should be evaluated so that appropriate handling practices and training programs can be established to insure safe workplace operations. Please consult your local sales representative for any further information.

REFERENCES

Threshold Limit Values for Chemical Substances and Physical Agents and Biological Exposure Indices, American Conference of Governmental Industrial Hygienists, OH., (Ariel Insight# CD-ROM Version), Ariel Research Corp., Bethesda, MD.

Hazardous Substances Data Bank, National Library of Medicine, Bethesda, Maryland (TOMES CPS# CD-ROM Version), Micromedex, Inc., Englewood, CO.

IARC Monographs on the Evaluation of the Carcinogenic Risk of Chemicals to Man, Geneva: World Health Organization, International Agency for Research on Cancer.

Integrated Risk Information System, U.S. Environmental Protection Agency, Washington, D.C. (TOMES CPS# CD-ROM Version), Micromedex, Inc., Englewood, CO.

Annual Report on Carcinogens, National Toxicology Program, U.S. Department of Health and Human Services, Public Health Service.

Title 29 Code of Federal Regulations, Part 1910, Subpart Z, Toxic and Hazardous Substances, Occupational Safety and Health Administration (OSHA), (Ariel Insight# CD-ROM Version), Ariel Research Corp., Bethesda, MD.

Registry of Toxic Effects of Chemical Substances, National Institute for Occupational Safety and Health, Cincinnati, OH, (TOMES CPS# CD-ROM Version), Micromedex, Inc., Englewood, CO.

Ariel Insight# (An integrated guide to industrial chemicals covered under major regulatory and advisory programs), North American Module, Western European Module, Chemical Inventories Module and the Generics Module (Ariel Insight# CD-ROM Version), Ariel Research Corp., Bethesda, MD.

The Teratogen Information System, University of Washington, Seattle, WA (TOMES CPS# CD-ROM Version), Micromedex, Inc., Englewood, CO.

Prepared By : Product Safety Department
Date issued : 01/13/2006
Version Number : 1.19

MATERIAL SAFETY DATA SHEET

PRODUCT

TRI-ACT® 1820

EMERGENCY TELEPHONE NUMBER(S)
(800) 424-9300 (24 Hours) CHEMTREC

1. CHEMICAL PRODUCT AND COMPANY IDENTIFICATION

PRODUCT NAME : **TRI-ACT® 1820**

APPLICATION : CORROSION INHIBITOR

COMPANY IDENTIFICATION : Nalco Company
1601 W. Diehl Road
Naperville, Illinois
60563-1198

EMERGENCY TELEPHONE NUMBER(S) : (800) 424-9300 (24 Hours) CHEMTREC

NFPA 704M/HMIS RATING
HEALTH : 3 / 3 FLAMMABILITY : 2 / 2 INSTABILITY : 0 / 0 OTHER :
0 = Insignificant 1 = Slight 2 = Moderate 3 = High 4 = Extreme

2. COMPOSITION/INFORMATION ON INGREDIENTS

Our hazard evaluation has identified the following chemical substance(s) as hazardous. Consult Section 15 for the nature of the hazard(s).

Hazardous Substance(s)	CAS NO	% (w/w)
Cyclohexylamine	108-91-8	10.0 - 30.0
Diethylethanolamine	100-37-8	5.0 - 10.0
Morpholine	110-91-8	5.0 - 10.0

3. HAZARDS IDENTIFICATION

****EMERGENCY OVERVIEW****

DANGER
Corrosive. Combustible. May cause tissue damage. Harmful if absorbed through skin. Vapors may have a strong offensive odor which may cause sensory response including headache, nausea and vomiting.
Do not get in eyes, on skin, on clothing. Do not take internally. Use with adequate ventilation. Keep away from sources of ignition - No smoking. Keep away from heat. Keep container tightly closed and in a well-ventilated place. In case of contact with eyes, rinse immediately with plenty of water and seek medical advice. After contact with skin, wash immediately with plenty of water. Protect product from freezing.
Wear a face shield. Wear chemical resistant apron, chemical splash goggles, impervious gloves and boots.
Combustible Liquid; may form combustible mixtures at or above the flash point. May evolve oxides of carbon (COx) under fire conditions. May evolve oxides of nitrogen (NOx) under fire conditions. Empty product containers may contain product residue. Do not pressurize, cut, heat, weld, or expose containers to flame or other sources of ignition.

PRIMARY ROUTES OF EXPOSURE :
Eye, Skin, Inhalation

HUMAN HEALTH HAZARDS - ACUTE :

EYE CONTACT :
Corrosive. Will cause eye burns and permanent tissue damage. Exposure to low vapor concentrations can result in foggy or blurred vision, objects appearing bluish and appearance of a halo around lights. These symptoms are temporary.

SKIN CONTACT :
May cause severe irritation or tissue damage depending on the length of exposure and the type of first aid administered. Harmful if absorbed through skin.

INGESTION :
Not a likely route of exposure. Corrosive; causes chemical burns to the mouth, throat and stomach.

INHALATION :
Irritating, in high concentrations, to the eyes, nose, throat and lungs. Vapors may have a strong offensive odor which may cause sensory response including headache, nausea and vomiting.

SYMPTOMS OF EXPOSURE :
Acute :
A review of available data does not identify any symptoms from exposure not previously mentioned.
Chronic :
A review of available data does not identify any symptoms from exposure not previously mentioned.

AGGRAVATION OF EXISTING CONDITIONS :
A review of available data does not identify any worsening of existing conditions.

4. FIRST AID MEASURES

EYE CONTACT :
PROMPT ACTION IS ESSENTIAL IN CASE OF CONTACT. Immediately flush eye with water for at least 15 minutes while holding eyelids open. Get immediate medical attention.

SKIN CONTACT :
Immediately flush with plenty of water for at least 15 minutes. For a large splash, flood body under a shower. Remove contaminated clothing. Wash off affected area immediately with plenty of water. Get immediate medical attention. Contaminated clothing, shoes, and leather goods must be discarded or cleaned before re-use.

INGESTION :
DO NOT INDUCE VOMITING. If conscious, washout mouth and give water to drink. Get immediate medical attention.

INHALATION :
Remove to fresh air, treat symptomatically. Get medical attention.

NOTE TO PHYSICIAN :
Probable mucosal damage may contraindicate the use of gastric lavage. Based on the individual reactions of the patient, the physician's judgement should be used to control symptoms and clinical condition.

5. FIRE FIGHTING MEASURES

FLASH POINT : 131 °F / 55 °C (PMCC)

EXTINGUISHING MEDIA :
Dry powder, Carbon dioxide, Foam, Other extinguishing agent suitable for Class B fires, For large fires, use water spray or fog, thoroughly drenching the burning material.
Keep containers cool by spraying with water.

FIRE AND EXPLOSION HAZARD :
Combustible Liquid; may form combustible mixtures at or above the flash point. May evolve oxides of carbon (COx) under fire conditions. May evolve oxides of nitrogen (NOx) under fire conditions. Empty product containers may contain product residue. Do not pressurize, cut, heat, weld, or expose containers to flame or other sources of ignition.

SPECIAL PROTECTIVE EQUIPMENT FOR FIRE FIGHTING :
In case of fire, wear a full face positive-pressure self contained breathing apparatus and protective suit.

6. ACCIDENTAL RELEASE MEASURES

PERSONAL PRECAUTIONS :
Restrict access to area as appropriate until clean-up operations are complete. Ensure clean-up is conducted by trained personnel only. Ventilate spill area if possible. Do not touch spilled material. Stop or reduce any leaks if it is safe to do so. Remove sources of ignition. Use personal protective equipment recommended in Section 8 (Exposure Controls/Personal Protection). Notify appropriate government, occupational health and safety and environmental authorities.

METHODS FOR CLEANING UP :
SMALL SPILLS: Soak up spill with absorbent material. Place residues in a suitable, covered, properly labeled container. Wash affected area. LARGE SPILLS: Contain liquid using absorbent material, by digging trenches or by diking. Reclaim into recovery or salvage drums or tank truck for proper disposal. Wash site of spillage thoroughly with water. Contact an approved waste hauler for disposal of contaminated recovered material. Dispose of material in compliance with regulations indicated in Section 13 (Disposal Considerations).

ENVIRONMENTAL PRECAUTIONS :
Do not contaminate surface water.

7. HANDLING AND STORAGE

HANDLING :
Do not get in eyes, on skin, on clothing. Do not take internally. Do not breathe vapors/gases/dust. Use with adequate ventilation. Avoid generating aerosols and mists. Keep away from acids and oxidizing agents. Do not use, store, spill or pour near heat, sparks or open flame. Keep the containers closed when not in use. Have emergency equipment (for fires, spills, leaks, etc.) readily available.

STORAGE CONDITIONS :
Store the containers tightly closed. Store away from heat and sources of ignition. Use proper grounding procedures. Store separately from acids. Store separately from oxidizers. Amine and sulphite products should not be stored within close proximity or resulting vapors may form visible airborne particles.

SUITABLE CONSTRUCTION MATERIAL :
HDPE (high density polyethylene), Natural rubber, Viton, Polypropylene, Stainless Steel 304, Stainless Steel 316L, Surface-modified HDPE (high density polyethylene), Kalrez, PTFE

UNSUITABLE CONSTRUCTION MATERIAL :
Carbon Steel C1018, Epoxyresin coating

8. EXPOSURE CONTROLS/PERSONAL PROTECTION

OCCUPATIONAL EXPOSURE LIMITS :
Exposure guidelines have not been established for this product. Available exposure limits for the substance(s) are shown below.

ACGIH/TLV :

Substance(s)	
Cyclohexylamine	TWA: 10 ppm , 41 mg/m3
Diethylethanolamine	TWA: 2 ppm , 9.6 mg/m3 (Skin)
Morpholine	TWA: 20 ppm , 71 mg/m3 (Skin)

OSHA/PEL :

Substance(s)	
Cyclohexylamine	TWA: 10 ppm , 40 mg/m3
Diethylethanolamine	TWA: 10 ppm , 50 mg/m3 (Skin)
Morpholine	TWA: 20 ppm , 70 mg/m3 (Skin) STEL: 30 ppm , 105 mg/m3 (Skin)

* A skin notation refers to the potential significant contribution to overall exposure by the cutaneous route, including mucous membranes and the eyes.

ENGINEERING MEASURES :
General ventilation is recommended. Use local exhaust ventilation if necessary to control airborne mist and vapor.

RESPIRATORY PROTECTION :
Where concentrations in air may exceed the limits given in this section, the use of a half face filter mask or air supplied breathing apparatus is recommended. A suitable filter material depends on the amount and type of chemicals being handled. Consider the use of filter type: Multi-contaminant cartridge. with a Particulate pre-filter. In event of emergency or planned entry into unknown concentrations a positive pressure, full-facepiece SCBA should be used. If respiratory protection is required, institute a complete respiratory protection program including selection, fit testing, training, maintenance and inspection.

HAND PROTECTION :
Butyl gloves, Most glove materials are of low chemical resistance. Replace gloves regularly.

SKIN PROTECTION :
Wear chemical resistant apron, chemical splash goggles, impervious gloves and boots. A full slicker suit is recommended if gross exposure is possible.

EYE PROTECTION :
Wear a face shield with chemical splash goggles.

HYGIENE RECOMMENDATIONS :
Eye wash station and safety shower are necessary. If clothing is contaminated, remove clothing and thoroughly wash the affected area. Launder contaminated clothing before reuse.

HUMAN EXPOSURE CHARACTERIZATION :
Based on our recommended product application and personal protective equipment, the potential human exposure is: Low

9. PHYSICAL AND CHEMICAL PROPERTIES

PHYSICAL STATE	Liquid
APPEARANCE	Light yellow
ODOR	Amine

SPECIFIC GRAVITY	0.98 - 0.99 @ 77 °F / 25 °C
DENSITY	8.1 - 8.2 lb/gal
SOLUBILITY IN WATER	Complete
pH (100 %)	12.0 - 13.0
VISCOSITY	5 cps @ 77 °F / 25 °C
FREEZING POINT	27 °F / -3 °C
VAPOR PRESSURE	6 mm Hg @ 68 °F / 20 °C
VOC CONTENT	40 %

Note: These physical properties are typical values for this product and are subject to change.

10. STABILITY AND REACTIVITY

STABILITY :
Stable under normal conditions.

HAZARDOUS POLYMERIZATION :
Hazardous polymerization will not occur.

CONDITIONS TO AVOID :
Heat and sources of ignition including static discharges.

MATERIALS TO AVOID :
Contact with strong acids (e.g. sulfuric, phosphoric, nitric, hydrochloric, chromic, sulfonic) may generate heat, splattering or boiling and toxic vapors. Contact with strong oxidizers (e.g. chlorine, peroxides, chromates, nitric acid, perchlorate, concentrated oxygen, permanganate) may generate heat, fires, explosions and/or toxic vapors. Avoid contact with SO2 or acidic bisulfite products, which may react to form visible airborne amine salt particles. Certain amines in contact with nitrous acid, organic or inorganic nitrites or atmospheres with high nitrous oxide concentrations may produce N-nitrosamines, many of which are cancer-causing agents to laboratory animals.

HAZARDOUS DECOMPOSITION PRODUCTS :
Under fire conditions: Oxides of carbon, Oxides of nitrogen

11. TOXICOLOGICAL INFORMATION

The following results are for a similar product.

ACUTE ORAL TOXICITY :

Species	LD50	Test Descriptor
Rat	779 mg/kg	Similar Product

Rating : Non-Hazardous

ACUTE DERMAL TOXICITY :

Species	LD50	Test Descriptor
Rabbit	2,055 mg/kg	Similar Product

Rating : Non-Hazardous

ACUTE INHALATION TOXICITY :

Species	LC50	Test Descriptor
Rat	> 12000 PPM (8 hrs)	Similar Product

Rating : Non-Hazardous

PRIMARY SKIN IRRITATION :

Draize Score	Test Descriptor
8.0 / 8.0	Similar Product

Rating : Extremely irritating (Corrosive)

PRIMARY EYE IRRITATION :

Draize Score	Test Descriptor
110.0 / 110.0	Similar Product

Rating : Extremely irritating (Corrosive)

SENSITIZATION :
This product is not expected to be a sensitizer.

CARCINOGENICITY :
None of the substances in this product are listed as carcinogens by the International Agency for Research on Cancer (IARC), the National Toxicology Program (NTP) or the American Conference of Governmental Industrial Hygienists (ACGIH).

HUMAN HAZARD CHARACTERIZATION :
Based on our hazard characterization, the potential human hazard is: High

12. ECOLOGICAL INFORMATION

ECOTOXICOLOGICAL EFFECTS :

The following results are for the product.

ACUTE FISH RESULTS :

Species	Exposure	LC50	Test Descriptor
Rainbow Trout	96 hrs	130 mg/l	Product
Fathead Minnow	96 hrs	75 mg/l	Product
Sheepshead Minnow	96 hrs	454 mg/l	Product
Fish		650 mg/l	Product
Inland Silverside	96 hrs	500.0 mg/l	Product

ACUTE INVERTEBRATE RESULTS :

Species	Exposure	LC50	EC50	Test Descriptor
Daphnia magna	48 hrs	190 mg/l		Product
Mysid Shrimp (Mysidopsis bahia)	96 hrs	131 mg/l		Product

AQUATIC PLANT RESULTS :

Species	Exposure	EC50/LC50	Test Descriptor
Algae		5,000 mg/l	Product

AQUATIC MICROORGANISM RESULTS :

Species	Exposure	EC50/LC50	Test Descriptor
Pseudomonas putida		7,500 mg/l	Product

PERSISTENCY AND DEGRADATION :

Chemical Oxygen Demand (COD) : 563,000 mg/l

The organic portion of this preparation is expected to be readily biodegradable.

MOBILITY :
The environmental fate was estimated using a level III fugacity model embedded in the EPI (estimation program interface) Suite TM , provided by the US EPA. The model assumes a steady state condition between the total input and output. The level III model does not require equilibrium between the defined media. The information provided is intended to give the user a general estimate of the environmental fate of this product under the defined conditions of the models. If released into the environment this material is expected to distribute to the air, water and soil/sediment in the approximate respective percentages;

Air	Water	Soil/Sediment
<5%	30 - 50%	50 - 70%

The portion in water is expected to be soluble or dispersible.

BIOACCUMULATION POTENTIAL
This preparation or material is not expected to bioaccumulate.

ENVIRONMENTAL HAZARD AND EXPOSURE CHARACTERIZATION
Based on our hazard characterization, the potential environmental hazard is: Moderate
Based on our recommended product application and the product's characteristics, the potential environmental exposure is: High

If released into the environment, see CERCLA/SUPERFUND in Section 15.

13. DISPOSAL CONSIDERATIONS

If this product becomes a waste, it could meet the criteria of a hazardous waste as defined by the Resource Conservation and Recovery Act (RCRA) 40 CFR 261. Before disposal, it should be determined if the waste meets the criteria of a hazardous waste.

Hazardous Waste: D001, D002

Hazardous wastes must be transported by a licensed hazardous waste transporter and disposed of or treated in a properly licensed hazardous waste treatment, storage, disposal or recycling facility. Consult local, state, and federal regulations for specific requirements.

14. TRANSPORT INFORMATION

The information in this section is for reference only and should not take the place of a shipping paper (bill of lading) specific to an order. Please note that the proper Shipping Name / Hazard Class may vary by packaging, properties, and mode of transportation. Typical Proper Shipping Names for this product are as follows.

LAND TRANSPORT :

Proper Shipping Name :	CORROSIVE LIQUID, FLAMMABLE, N.O.S.
Technical Name(s) :	CYCLOHEXYLAMINE, DIETHYLAMINOETHANOL, MORPHOLINE
UN/ID No :	UN 2920
Hazard Class - Primary :	8
Hazard Class - Secondary :	3
Packing Group :	II
Flash Point :	55 °C / 131 °F

AIR TRANSPORT (ICAO/IATA) :

Proper Shipping Name :	CORROSIVE LIQUID, FLAMMABLE, N.O.S.
Technical Name(s) :	CYCLOHEXYLAMINE, DIETHYLAMINOETHANOL, MORPHOLINE
UN/ID No :	UN 2920

Hazard Class - Primary :	8
Hazard Class - Secondary :	3
Packing Group :	II
IATA Cargo Packing Instructions :	812
IATA Cargo Aircraft Limit :	30 L (Max net quantity per package)

MARINE TRANSPORT (IMDG/IMO) :

Proper Shipping Name :	CORROSIVE LIQUID, FLAMMABLE, N.O.S.
Technical Name(s) :	CYCLOHEXYLAMINE, MORPHOLINE
UN/ID No :	UN 2920
Hazard Class - Primary :	8
Hazard Class - Secondary :	3
Packing Group :	II

15. REGULATORY INFORMATION

NATIONAL REGULATIONS, USA :

OSHA HAZARD COMMUNICATION RULE, 29 CFR 1910.1200 :
Based on our hazard evaluation, the following substance(s) in this product is/are hazardous and the reason(s) is/are shown below.

Cyclohexylamine : Corrosive, Flammable
Diethylethanolamine : Combustible., Corrosive
Morpholine : Corrosive, Flammable

CERCLA/SUPERFUND, 40 CFR 117, 302 :
Notification of spills of this product is not required. Notification of spills of this product is not required.

SARA/SUPERFUND AMENDMENTS AND REAUTHORIZATION ACT OF 1986 (TITLE III) - SECTIONS 302, 311, 312, AND 313 :

SECTION 302 - EXTREMELY HAZARDOUS SUBSTANCES (40 CFR 355) :
This product contains the following substance(s) which is listed in Appendix A and B as an Extremely Hazardous Substance. Listed below are the statutory Threshold Planning Quantity (TPQ) for the substance(s) and the Reportable Quantity (RQ) of the product. If a reportable quantity of product is released, it requires notification to your State Emergency Response Commission. You may also be required to notify the National Response Center - See CERCLA/SUPERFUND, above.

Extremely Hazardous Substance	TPQ	RQ
Cyclohexylamine	10,000 lbs	40,000 lbs

SECTIONS 311 AND 312 - MATERIAL SAFETY DATA SHEET REQUIREMENTS (40 CFR 370) :
Our hazard evaluation has found this product to be hazardous. The product should be reported under the following indicated EPA hazard categories:

X	Immediate (Acute) Health Hazard
-	Delayed (Chronic) Health Hazard

X	Fire Hazard
-	Sudden Release of Pressure Hazard
-	Reactive Hazard

Under SARA 311 and 312, the EPA has established threshold quantities for the reporting of hazardous chemicals. The current thresholds are: 500 pounds or the threshold planning quantity (TPQ), whichever is lower, for extremely hazardous substances and 10,000 pounds for all other hazardous chemicals.

SECTION 313 - LIST OF TOXIC CHEMICALS (40 CFR 372) :
This product does not contain substances on the List of Toxic Chemicals.

TOXIC SUBSTANCES CONTROL ACT (TSCA) :
The substances in this preparation are included on or exempted from the TSCA 8(b) Inventory (40 CFR 710) The substances in this preparation are included on or exempted from the TSCA 8(b) Inventory (40 CFR 710)

FOOD AND DRUG ADMINISTRATION (FDA) Federal Food, Drug and Cosmetic Act :
When use situations necessitate compliance with FDA regulations, this product is acceptable under : 21 CFR 173.310 Boiler Water Additives

The following limitations apply:

Maximum dosage	Limitation
45 PPM	in the steam.

This product can not be used where the steam produced will contact milk or milk products.

NSF NON-FOOD COMPOUNDS REGISTRATION PROGRAM (former USDA List of Proprietary Substances & Non-Food Compounds) :
NSF Registration number for this product is : 062362
This product is acceptable for use in meat, poultry, and other food processing areas as a Boiler Treatment Product (G6), for treating boiler and steam lines where the steam produced may contact edible products. Acceptable usage shall be in accordance with the dosage limitations specified on the product label.

This product has been certified as KOSHER/PAREVE for year-round use INCLUDING THE PASSOVER SEASON by the CHICAGO RABBINICAL COUNCIL.

FEDERAL WATER POLLUTION CONTROL ACT, CLEAN WATER ACT, 40 CFR 401.15 / formerly Sec. 307, 40 CFR 116.4 / formerly Sec. 311 :
None of the substances are specifically listed in the regulation.

CLEAN AIR ACT, Sec. 111 (40 CFR 60, Volatile Organic Compounds), Sec. 112 (40 CFR 61, Hazardous Air Pollutants), Sec. 602 (40 CFR 82, Class I and II Ozone Depleting Substances) :
This product contains the following substances listed in the regulation:

Substance(s)	Citations
• Morpholine	Sec. 111
• Cyclohexylamine	Sec. 111

CALIFORNIA PROPOSITION 65 :
This product does not contain substances which require warning under California Proposition 65.

MICHIGAN CRITICAL MATERIALS :
None of the substances are specifically listed in the regulation.

STATE RIGHT TO KNOW LAWS :
The following substances are disclosed for compliance with State Right to Know Laws:

Cyclohexylamine	108-91-8
Morpholine	110-91-8
Diethylethanolamine	100-37-8

NATIONAL REGULATIONS, CANADA :

WORKPLACE HAZARDOUS MATERIALS INFORMATION SYSTEM (WHMIS) :
This product has been classified in accordance with the hazard criteria of the Controlled Products Regulations (CPR) and the MSDS contains all the information required by the CPR.

WHMIS CLASSIFICATION :
B3 - Combustible Liquids, E - Corrosive Material

CANADIAN ENVIRONMENTAL PROTECTION ACT (CEPA) :
The substances in this preparation are listed on the Domestic Substances List (DSL), are exempt, or have been reported in accordance with the New Substances Notification Regulations.

INTERNATIONAL CHEMICAL CONTROL LAWS

AUSTRALIA
All substances in this product comply with the National Industrial Chemicals Notification & Assessment Scheme (NICNAS).

EUROPE
The substances in this preparation have been reviewed for compliance with the EINECS or ELINCS inventories.

JAPAN
All substances in this product comply with the Law Regulating the Manufacture and Importation Of Chemical Substances and are listed on the Ministry of International Trade & industry List (MITI).

KOREA
All substances in this product comply with the Toxic Chemical Control Law (TCCL) and are listed on the Existing Chemicals List (ECL)

THE PHILIPPINES
All substances in this product comply with the Republic Act 6969 (RA 6969) and are listed on the Philippine Inventory of Chemicals & Chemical Substances (PICCS).

16. OTHER INFORMATION

Due to our commitment to Product Stewardship, we have evaluated the human and environmental hazards and exposures of this product. Based on our recommended use of this product, we have characterized the product's general risk. This information should provide assistance for your own risk management practices. We have evaluated our product's risk as follows:

* The human risk is: Low

* The environmental risk is: Moderate

Any use inconsistent with our recommendations may affect the risk characterization. Our sales representative will assist you to determine if your product application is consistent with our recommendations. Together we can implement an appropriate risk management process.

This product material safety data sheet provides health and safety information. The product is to be used in applications consistent with our product literature. Individuals handling this product should be informed of the recommended safety precautions and should have access to this information. For any other uses, exposures should be evaluated so that appropriate handling practices and training programs can be established to insure safe workplace operations. Please consult your local sales representative for any further information.

REFERENCES

Threshold Limit Values for Chemical Substances and Physical Agents and Biological Exposure Indices, American Conference of Governmental Industrial Hygienists, OH., (Ariel Insight# CD-ROM Version), Ariel Research Corp., Bethesda, MD.

Hazardous Substances Data Bank, National Library of Medicine, Bethesda, Maryland (TOMES CPS# CD-ROM Version), Micromedex, Inc., Englewood, CO.

IARC Monographs on the Evaluation of the Carcinogenic Risk of Chemicals to Man, Geneva: World Health Organization, International Agency for Research on Cancer.

Integrated Risk Information System, U.S. Environmental Protection Agency, Washington, D.C. (TOMES CPS# CD-ROM Version), Micromedex, Inc., Englewood, CO.

Annual Report on Carcinogens, National Toxicology Program, U.S. Department of Health and Human Services, Public Health Service.

Title 29 Code of Federal Regulations, Part 1910, Subpart Z, Toxic and Hazardous Substances, Occupational Safety and Health Administration (OSHA), (Ariel Insight# CD-ROM Version), Ariel Research Corp., Bethesda, MD.

Registry of Toxic Effects of Chemical Substances, National Institute for Occupational Safety and Health, Cincinnati, OH, (TOMES CPS# CD-ROM Version), Micromedex, Inc., Englewood, CO.

Ariel Insight# (An integrated guide to industrial chemicals covered under major regulatory and advisory programs), North American Module, Western European Module, Chemical Inventories Module and the Generics Module (Ariel Insight# CD-ROM Version), Ariel Research Corp., Bethesda, MD.

The Teratogen Information System, University of Washington, Seattle, WA (TOMES CPS# CD-ROM Version), Micromedex, Inc., Englewood, CO.

Prepared By : Product Safety Department
Date issued : 04/05/2005
Version Number : 1.9

PB BLASTER

Product: PB−B

Section 1: PRODUCT INFORMATION

Chemical family: Mixture.

Manufacturer: Truflex/Pang Rubber Products Company, Inc.
200 East Coshocton Street
P.O. Box 486
Johnstown, Ohio 43031.

Manufacturer emergency phone number: Chemtrec 800−424−9300.
International: 703−527−3887.

Information phone number: 740−967−9015.
800−433−8324.

Supplier: Same as manufacturer.

Product name: PB BLASTER (MSDS #113)

Product uses: Penetrating lubricant.

Catalog number(s): PB−B

TDG classification:

AEROSOLS
UN1950
Class 2.1.

May be shipped as Consumer Commodity ORM−D.

Labels required: None

Emergency response guidebook number: 126

EmS number: 2−13

Reportable Quantity (DOT): Not applicable.

Effective date: 2010/9/20

Revision No.: 3

Last review: 2010/9/20

NFPA:

Section 2: HAZARDOUS INGREDIENTS

C.A.S.	Concentration% wgt/wgt	Ingredient Name	ACGIH−TLV TWA	LD/50	LC/50
124−38−9	< 2	CARBON DIOXIDE	5000 PPM	NOT AVAILABLE	NOT AVAILABLE
34590−94−8	> 3	DIPROPYLENE GLYCOL MONOMETHYL ETHER	100 PPM (SKIN)	5400 UL/KG RAT ORAL 5.5 ML/KG RAT ORAL 10 ML/KG RABBIT DERMAL	NOT AVAILABLE
64742−57−0	20 − 30	PETROLEUM OIL	5 MG/M3	NOT AVAILABLE	NOT AVAILABLE

64742−94−5	> 50	NAPHTHA, PETROLEUM		> 2 ML/KG RABBIT DERMAL	> 590 MG/M3/4H RAT INHALATION
84133−50−0	> 2	ALKYLOXYPOLYETHYLENEOXYETHANOL		NOT AVAILABLE	NOT AVAILABLE

Section 3: PHYSICAL DATA

Physical state: Liquid.

Appearance & odor: Amber
Dark brown.
Strong aromatic odour.
Viscous liquid.

Odor threshold (ppm): Not available.

Vapour pressure (mmHg): Not applicable.

Vapour density (air=1): >1

Volatiles (%)

By volume: 69.1

Evaporation rate (butyl acetate = 1): >1

Boiling point (°C): 178 − 215 (352−418°F)

Freezing point (°C): Not available.

pH: Not available.

Specific gravity @ 20 °C: 0.9020 (7.515 lbs/gal)

Solubility in water (%): Not available.

Coefficient of water\oil dist.: Not available.

VOC: 5.194 LBS/GAL (615.8 G/L)

Section 4: FIRE & EXPLOSION DATA

Flammability: Flammable aerosol.

Conditions of flammability: Vapours are heavier than air and may travel along the ground and be ignited by flames, sparks or other ignition sources at locations distant from the material handling point.
Heat, sparks and open flames.

Extinguishing media: Carbon dioxide, dry chemical, foam.

Special procedures: Self−contained breathing apparatus required.
Firefighters should wear the usual protective gear.

Auto−ignition temperature: Not available.

Flash point (°C), method: Tag Closed Cup.
66.7 (152°F)

Lower flammability limit (% vol): Not available.

Upper flammability limit (% vol): Not available.

Explosion Data

Sensitivity to static discharge: Take precautionary measures against static discharge.

Sensitivity to mechanical impact: Contents under pressure.

Hazardous combustion products: Oxides of carbon (CO, CO2).
Various hydrocarbons.

Explosive power: Product (even just residue) can ignite explosively.

Section 5: REACTIVITY DATA

Chemical stability: Product is stable.

Conditions of instability: None known.

Hazardous polymerization: Will not occur.

Incompatible substances: Strong acids.
Strong oxidizing agents.

Hazardous decomposition products: See hazardous combustion products.

Section 6: TOXICOLOGICAL PROPERTIES

Route of entry: Skin contact, eye contact, inhalation and ingestion.

Effects of acute exposure

Eye contact: May cause irritation.
May cause redness and tearing.
May cause stinging.
May cause swelling.

Skin contact: May cause skin burns.
May cause mild irritation.
May cause drying and cracking.
May cause redness or burning sensation.

Inhalation: May cause drowsiness.
May cause kidney and liver damage.
May cause irritation of the respiratory tract.
May cause light headedness.

Ingestion: Can cause irritation to mouth, throat, esophagus and stomach.
Aspiration hazard if swallowed.

Effects of chronic exposure: May affect the central nervous system.

LD50 of product, species & route: Not available for mixture, see the ingredients section.

LC50 of product, species & route: Not available for mixture, see the ingredients section.

Exposure limit of material: Not available for mixture, see the ingredients section.

Sensitization to product: Not available.

Carcinogenic effects: Not listed as a carcinogen.

Reproductive effects: Not available.

Teratogenicity: Not available.

Mutagenicity: Not available.

Synergistic materials: Not available.

Section 7: PREVENTATIVE MEASURES

Precautionary Measures

Gloves/Type:

Chemical resistant gloves.
Polyvinyl alcohol gloves.
Nitrile gloves.

Respiratory/Type:

NIOSH approved respirator, if necessary.
(negative pressure type).

Footwear/Type:

Impervious boots.

Clothing/Type: Impervious clothing.

Other/Type: Eye wash facility should be in close proximity.
Emergency shower should be in close proximity.

Ventilation requirements: Explosion proof ventilation equipment.
Local exhaust and/or general ventilation.

Leak/Spill: Recover using a pump.
Eliminate all sources of ignition.
Dike area to prevent spreading.
Evacuate all non−essential personnel.
Prevent entry into drains, sewers, and other waterways.
Absorb residual material with sand or other absorbent material.
Stop leak if without risk.
Wear appropriate protective equipment.
Ground handling equipment.
Transfer to an approved container for disposal.
Notify the appropriate authorities as required.

Waste disposal: In accordance with municipal, provincial and federal regulations.

Handling procedures and equipment: Maintain a good personal hygiene.
Keep away from heat, sparks, and open flame.
Use adequate ventilation.
Wash thoroughly after using, particularly before eating or smoking.
Wear personal protective equipment appropriate to task.
Empty containers containing residue may cause a hazard.
Do not cut, grind, weld or drill empty container.
Use proper grounding procedures.
Avoid contact with skin, eyes and clothing.
Avoid breathing vapor, fumes or mist.
Launder contaminated clothing prior to reuse.
Do not ingest.

Storage requirements: Store away from all sources of ignition.
Store away from strong acids or oxidizers.

Special shipping information: See transportation information.

Section 8: FIRST AID MEASURES

Skin contact: Remove contaminated clothing.
Wash with mild soap and water.
Consult a physician if irritation persists.

Eye contact: Flush eyes with clear, running water for 20 minutes while holding eyelids open. If irritation persists, consult a physician.

Inhalation: Keep person warm and at rest.
Remove victim to fresh air. If breathing is difficult administer oxygen. If not breathing, have qualified person give artificial respiration. Obtain medical attention.

Ingestion: If victim is drowsy or unconscious, place on left side with head down. Do not leave individual unattended.
Never give anything by mouth to an unconscious person.
Do not induce vomiting, seek immediate medical attention.

Additional information: The above information is believed to be correct but does not purport to be all inclusive and shall be used only as a guide. This company shall not be held liable for any inaccuracies.

Section 9: ADDITIONAL INFORMATION

General note: This material safety data sheet was prepared from information obtained from various sources, including product suppliers and the Canadian Center for Occupational Health and Safety.

Data prepared by: Global Safety Management
3340 Peachtree Road, #1800
Atlanta, GA 30326

Phone: 877−683−7460
Fax: (877) 683−7462

Web: www.globalsafetynet.com
Email: info@globalsafetynet.com.

See www.techtirerepairs.com for the latest MSDSs.

Material Safety Data Sheet – Perlite

----------I. Product Identification ----------

Trade Name (as labeled) Supreme Perlite (Expanded)

Manufacturers Name Supreme Perlite Company

Website & Email: www.perlite.com info@perlite.com

Address: 4600 N. Suttle Rd.
Portland, OR 97217

Phone Number: 503-286-4333

Date Prepared or Revised: April 1, 2010

----------II. Product Ingredients----------

Ingredient Name	CAS Number	%	PEL	TLV(total)
Perlite	93763-70-3	100	15 mg/M3	10mg/M3

A mineral composed of sodium potassium aluminum silicate of variable composition.

Perlite is considered a nuisance dust (also called "Particulates Not Otherwise Classified (PNOC) by ACGIH).

HMIS Code: Health – 0, Fire – 0, Reactivity – 0, Personal Protection – X.

Alpha-Cristobalite & Tridymite: Less than 0.1%

Alpha Quartz: <0.1% below detectable limits

----------III. Physical Properties----------

Vapor Density (air=1)	N/A	**Melting point or range. ^{0}F**	2000+
Specific Gravity	2.35	**Boiling point or range. ^{0}F**	N/A
Solubility in Water	<1%	**Evaporation rate (butyl acetate = 1)**	N/A
Vapor Pressure (mmHg @ 20^{0}C)	N/A		

Appearance and odor: White to off white granules, no odor.

HOW TO DETECT THIS SUBSTANCE (warning properties of substance as a gas, vapor, dust or mist)

Visual only (dust). No gas, vapors, or mist emitted.

----------IV. Fire and Explosion----------

Flash Point, ^{0}F (give method) Perlite is a fully oxidized, non-flammable mineral. It is noncombustible and non-flammable.

Auto ignition temp., ^{0}F N/A

Flammable limits in air, Vol. % N/A lower (LEL) N/A upper (UEL) N/A

Fire extinguishing materials: N/A

_____water spray _____ carbon dioxide _____other

_____foam _____dry chemical

Special fire fighting procedures: N/A

Usual fire & explosion hazards: N/A

----------V. Health Hazard Information----------

SYMPTOMS OF EXPOSURE for each potential route of exposure

Inhaled: Coughing

Contact with skin or eyes: Possible eye irritation from dust particles; wear eye protection.

Absorbed through skin: N/A

Swallowed: N/A

HEALTH EFFECTS OR RISKS FROM EXPOSURE.

Acute: None

Chronic: Excessive inhalation over long period may cause harmful irritation; use mask suitable for nuisance dust.

Target Organ: None

FIRST AID: EMERGENCY PROCEDURES

Eye Contact: Attempt to wash out with clear water; if unable, have particle removed by doctor.

Skin Contact: None

Inhaled: Remove affected individual from dusty area to area with clean air.

Swallowed: None

SUSPECTED CANCER AGENT?

__X__ No: This product's ingredients are not found in below lists.

YES: ____Federal OSHA _____NTP _____IARC

MEDICAL CONDITIONS AGGRAVATED BY EXPOSURE

Any respiratory illnesses, which a nuisance dust may aggravate.

----------VI Reactivity Data----------

Stability: **__X__Stable** _____Unstable

Incompatibility: Hydrofluoric Acid

Hazardous Polymerization: _____May occur **__X__Will not occur**

Conditions to avoid: None in designed use.

Hazardous Decomposition Products: May react with hydrofluoric acid form toxic gas.

----------VII. Spill, Leak & Disposal Procedures----------

Spill response procedures (include employee protection measures):

Vacuum clean or sweep material; Use respirators suitable for nuisance dust & eye protection.

Preparing wastes for disposal (container types, neutralization, etc.):

Dispose in bulk or containers according to local dump requirements. No special treatment required.

NOTE: Dispose of all wastes in accordance with federal, state and local regulations.

----------VIII. SPECIAL HANDLING INFORMATION----------

Ventilation and engineering controls:

Maintain dust level below TLV.

Respiratory protection (type):

Masks suitable for nuisance dust.

Eye protection (type):

Protective goggles.

Gloves (specify material):

Not required.

Work practices, hygienic practices:

Use good housekeeping to avoid transient dust.

Other handling and storage requirements:

Use good housekeeping to avoid transient dust.

Protective measures during maintenance of contaminated equipment:

No special equipment, other than respirators and goggles.

As of the date of this document, the foregoing information is believed to be accurate and is provided in good faith to comply with applicable federal and state laws. However, no warranty or representation with respect to such information is intended or given, and it is the responsibility of the user to comply with all applicable federal, state and local laws and regulations

Material Safety Data Sheet

1. MATERIAL AND COMPANY IDENTIFICATION

Material Name : **Shell Caprinus XR 40**
Uses : Engine oil.

Manufacturer/Supplier : **SOPUS Products**
700 Milam
700 Milam
Houston TX 77002-2806
Houston TX 77002-2806
USA
USA

MSDS Request :

Emergency Telephone Number
Spill Information : 877-242-7400
Health Information : 877-242-7400

2. COMPOSITION/INFORMATION ON INGREDIENTS

Chemical Identity	CAS No.	Concentration
Distillates (petroleum), hydrotreated light naphthenic	64742-53-6	30.00 - 60.00 %

The highly refined mineral oil contains <3% (w/w) DMSO-extract, according to IP346.
Highly refined mineral oils and additives.

3. HAZARDS IDENTIFICATION

Emergency Overview

Appearance and Odour : Amber. Liquid at room temperature. Slight hydrocarbon.

Health Hazards : Not classified as dangerous for supply or conveyance.
Safety Hazards : Not classified as flammable but will burn.
Environmental Hazards : Not classified as dangerous for the environment.

Health Hazards : Not expected to be a health hazard when used under normal conditions.

Health Hazards
Inhalation : Under normal conditions of use, this is not expected to be a primary route of exposure.
Skin Contact : Prolonged or repeated skin contact without proper cleaning can clog the pores of the skin resulting in disorders such as oil acne/folliculitis.
Eye Contact : May cause slight irritation to eyes.
Ingestion : Low toxicity if swallowed.
Other Information : Used oil may contain harmful impurities.
Signs and Symptoms : Oil acne/folliculitis signs and symptoms may include formation of black pustules and spots on the skin of exposed areas.

		Ingestion may result in nausea, vomiting and/or diarrhoea.
Aggravated Medical Condition	:	Pre-existing medical conditions of the following organ(s) or organ system(s) may be aggravated by exposure to this material: Skin.
Environmental Hazards	:	Not classified as dangerous for the environment.
Additional Information	:	Under normal conditions of use or in a foreseeable emergency, this product does not meet the definition of a hazardous chemical when evaluated according to the OSHA Hazard Communication Standard, 29 CFR 1910.1200.

4. FIRST AID MEASURES

General Information	:	Not expected to be a health hazard when used under normal conditions.
Inhalation	:	No treatment necessary under normal conditions of use. If symptoms persist, obtain medical advice.
Skin Contact	:	Remove contaminated clothing. Flush exposed area with water and follow by washing with soap if available. If persistent irritation occurs, obtain medical attention.
Eye Contact	:	Flush eye with copious quantities of water. If persistent irritation occurs, obtain medical attention.
Ingestion	:	In general no treatment is necessary unless large quantities are swallowed, however, get medical advice.
Advice to Physician	:	Treat symptomatically.

5. FIRE FIGHTING MEASURES

Clear fire area of all non-emergency personnel.

Flash point	:	Typical 260 °C / 500 °F (COC)
Upper / lower Flammability or Explosion limits	:	Typical 1 - 10 %(V)(based on mineral oil)
Auto ignition temperature	:	> 320 °C / 608 °F
Specific Hazards	:	Hazardous combustion products may include: A complex mixture of airborne solid and liquid particulates and gases (smoke). Carbon monoxide. Unidentified organic and inorganic compounds.
Suitable Extinguishing Media	:	Foam, water spray or fog. Dry chemical powder, carbon dioxide, sand or earth may be used for small fires only.
Unsuitable Extinguishing Media	:	Do not use water in a jet.
Protective Equipment for Firefighters	:	Proper protective equipment including breathing apparatus must be worn when approaching a fire in a confined space.

6. ACCIDENTAL RELEASE MEASURES

Avoid contact with spilled or released material. For guidance on selection of personal protective equipment see Chapter 8 of this Material Safety Data Sheet. See Chapter 13 for information on disposal. Observe all relevant local and international regulations.

Protective measures	:	Avoid contact with skin and eyes. Use appropriate containment

to avoid environmental contamination. Prevent from spreading or entering drains, ditches or rivers by using sand, earth, or other appropriate barriers.

Clean Up Methods : Slippery when spilt. Avoid accidents, clean up immediately. Prevent from spreading by making a barrier with sand, earth or other containment material. Reclaim liquid directly or in an absorbent. Soak up residue with an absorbent such as clay, sand or other suitable material and dispose of properly.

Additional Advice : Local authorities should be advised if significant spillages cannot be contained.

7. HANDLING AND STORAGE

General Precautions : Use local exhaust ventilation if there is risk of inhalation of vapours, mists or aerosols. Properly dispose of any contaminated rags or cleaning materials in order to prevent fires. Use the information in this data sheet as input to a risk assessment of local circumstances to help determine appropriate controls for safe handling, storage and disposal of this material.

Handling : Avoid prolonged or repeated contact with skin. Avoid inhaling vapour and/or mists. When handling product in drums, safety footwear should be worn and proper handling equipment should be used.

Storage : Keep container tightly closed and in a cool, well-ventilated place. Use properly labelled and closeable containers. Storage Temperature: 0 - 50 °C / 32 - 122 °F

Recommended Materials : For containers or container linings, use mild steel or high density polyethylene.

Unsuitable Materials : PVC.

Additional Information : Polyethylene containers should not be exposed to high temperatures because of possible risk of distortion.

8. EXPOSURE CONTROLS/PERSONAL PROTECTION

Occupational Exposure Limits

Material	Source	Type	ppm	mg/m3	Notation
Oil mist, mineral	ACGIH	TWA(Mist.)		5 mg/m3	
Oil mist, mineral	ACGIH	STEL(Mist.)		10 mg/m3	
Distillates (petroleum), hydrotreated light naphthenic	ACGIH	TWA(Mist.)		5 mg/m3	

Distillates (petroleum), hydrotreated light naphthenic	ACGIH	STEL(Mist.)		10 mg/m3	
Distillates (petroleum), hydrotreated light naphthenic	OSHA Z1	PEL	500 ppm	2,000 mg/m3	
Distillates (petroleum), hydrotreated light naphthenic	OSHA Z1A	TWA	400 ppm	1,600 mg/m3	

Additional Information : Shell has adopted as Interim Standards the OSHA Z1A values that were established in 1989 and later rescinded.

Exposure Controls : The level of protection and types of controls necessary will vary depending upon potential exposure conditions. Select controls based on a risk assessment of local circumstances. Appropriate measures include: Adequate ventilation to control airborne concentrations. Where material is heated, sprayed or mist formed, there is greater potential for airborne concentrations to be generated.

Personal Protective Equipment : Personal protective equipment (PPE) should meet recommended national standards. Check with PPE suppliers.

Respiratory Protection : No respiratory protection is ordinarily required under normal conditions of use. In accordance with good industrial hygiene practices, precautions should be taken to avoid breathing of material. If engineering controls do not maintain airborne concentrations to a level which is adequate to protect worker health, select respiratory protection equipment suitable for the specific conditions of use and meeting relevant legislation. Check with respiratory protective equipment suppliers. Where air-filtering respirators are suitable, select an appropriate combination of mask and filter. Select a filter suitable for combined particulate/organic gases and vapours [boiling point >65°C(149 °F)].

Hand Protection : Where hand contact with the product may occur the use of gloves approved to relevant standards (e.g. Europe: EN374, US: F739) made from the following materials may provide suitable chemical protection: PVC, neoprene or nitrile rubber gloves. Suitability and durability of a glove is dependent on usage, e.g. frequency and duration of contact, chemical resistance of glove material, glove thickness, dexterity. Always seek advice from glove suppliers. Contaminated gloves should

		be replaced. Personal hygiene is a key element of effective hand care. Gloves must only be worn on clean hands. After using gloves, hands should be washed and dried thoroughly. Application of a non-perfumed moisturizer is recommended.
Eye Protection	:	Wear safety glasses or full face shield if splashes are likely to occur.
Protective Clothing	:	Skin protection not ordinarily required beyond standard issue work clothes.
Monitoring Methods	:	Monitoring of the concentration of substances in the breathing zone of workers or in the general workplace may be required to confirm compliance with an OEL and adequacy of exposure controls. For some substances biological monitoring may also be appropriate.
Environmental Exposure Controls	:	Minimise release to the environment. An environmental assessment must be made to ensure compliance with local environmental legislation.

9. PHYSICAL AND CHEMICAL PROPERTIES

Appearance	:	Amber. Liquid at room temperature.
Odour	:	Slight hydrocarbon.
pH	:	Not applicable.
Initial Boiling Point and Boiling Range	:	> 280 °C / 536 °F estimated value(s)
Pour point	:	Typical -9 °C / 16 °F
Flash point	:	Typical 260 °C / 500 °F (COC)
Upper / lower Flammability or Explosion limits	:	Typical 1 - 10 %(V) (based on mineral oil)
Auto-ignition temperature	:	> 320 °C / 608 °F
Vapour pressure	:	< 0.5 Pa at 20 °C / 68 °F (estimated value(s))
Density	:	Typical 0.908 g/cm3 at 15 °C / 59 °F
Water solubility	:	Negligible.
n-octanol/water partition coefficient (log Pow)	:	> 6 (based on information on similar products)
Kinematic viscosity	:	Typical 150 mm2/s at 40 °C / 104 °F
Vapour density (air=1)	:	> 1 (estimated value(s))
Evaporation rate (nBuAc=1)	:	Data not available

10. STABILITY AND REACTIVITY

Stability	:	Stable.
Conditions to Avoid	:	Extremes of temperature and direct sunlight.
Materials to Avoid	:	Strong oxidising agents.
Hazardous Decomposition Products	:	Hazardous decomposition products are not expected to form during normal storage.

11. TOXICOLOGICAL INFORMATION

Basis for Assessment	:	Information given is based on data on the components and the toxicology of similar products.
Acute Oral Toxicity	:	Expected to be of low toxicity: LD50 > 5000 mg/kg , Rat
Acute Dermal Toxicity	:	Expected to be of low toxicity: LD50 > 5000 mg/kg , Rabbit

Acute Inhalation Toxicity	:	Not considered to be an inhalation hazard under normal conditions of use.
Skin Irritation	:	Expected to be slightly irritating. Prolonged or repeated skin contact without proper cleaning can clog the pores of the skin resulting in disorders such as oil acne/folliculitis.
Eye Irritation	:	Expected to be slightly irritating.
Respiratory Irritation	:	Inhalation of vapours or mists may cause irritation.
Sensitisation	:	Not expected to be a skin sensitiser.
Repeated Dose Toxicity	:	Not expected to be a hazard.
Mutagenicity	:	Not considered a mutagenic hazard.
Carcinogenicity	:	Product contains mineral oils of types shown to be non-carcinogenic in animal skin-painting studies. Highly refined mineral oils are not classified as carcinogenic by the International Agency for Research on Cancer (IARC). Other components are not known to be associated with carcinogenic effects.
Reproductive and Developmental Toxicity	:	Not expected to be a hazard.
Additional Information	:	Used oils may contain harmful impurities that have accumulated during use. The concentration of such impurities will depend on use and they may present risks to health and the environment on disposal. ALL used oil should be handled with caution and skin contact avoided as far as possible. Continuous contact with used engine oils has caused skin cancer in animal tests.

12. ECOLOGICAL INFORMATION

Ecotoxicological data have not been determined specifically for this product. Information given is based on a knowledge of the components and the ecotoxicology of similar products.

Acute Toxicity	:	Poorly soluble mixture. May cause physical fouling of aquatic organisms. Expected to be practically non toxic: LL/EL/IL50 > 100 mg/l (to aquatic organisms) (LL/EL50 expressed as the nominal amount of product required to prepare aqueous test extract). Mineral oil is not expected to cause any chronic effects to aquatic organisms at concentrations less than 1 mg/l.
Mobility	:	Liquid under most environmental conditions. Floats on water. If it enters soil, it will adsorb to soil particles and will not be mobile.
Persistence/degradability	:	Expected to be not readily biodegradable. Major constituents are expected to be inherently biodegradable, but the product contains components that may persist in the environment.
Bioaccumulation	:	Contains components with the potential to bioaccumulate.
Other Adverse Effects	:	Product is a mixture of non-volatile components, which are not expected to be released to air in any significant quantities. Not expected to have ozone depletion potential, photochemical ozone creation potential or global warming potential.

13. DISPOSAL CONSIDERATIONS

Material Disposal	:	Recover or recycle if possible. It is the responsibility of the waste generator to determine the toxicity and physical properties of the material generated to determine the proper waste classification and disposal methods in compliance with applicable regulations. Do not dispose into the environment, in drains or in water courses.
Container Disposal	:	Dispose in accordance with prevailing regulations, preferably to a recognised collector or contractor. The competence of the collector or contractor should be established beforehand.
Local Legislation	:	Disposal should be in accordance with applicable regional, national, and local laws and regulations.

14. TRANSPORT INFORMATION

US Department of Transportation Classification (49CFR)
This material is not subject to DOT regulations under 49 CFR Parts 171-180.

IMDG
This material is not classified as dangerous under IMDG regulations.

IATA (Country variations may apply)
This material is not classified as dangerous under IATA regulations.

15. REGULATORY INFORMATION

The regulatory information is not intended to be comprehensive. Other regulations may apply to this material.

Federal Regulatory Status

Notification Status

DSL	All components listed.
EINECS	All components listed or polymer exempt.
TSCA	All components listed.

Shell classifies this material as an "oil" under the CERCLA Petroleum Exclusion, therefore releases to the environment are not reportable under CERCLA.

SARA Hazard Categories (311/312)
No SARA 311/312 Hazards.

State Regulatory Status

California Safe Drinking Water and Toxic Enforcement Act (Proposition 65)

This material does not contain any chemicals known to the State of California to cause cancer, birth defects or other reproductive harm.

New Jersey Right-To-Know Chemical List

Distillates (petroleum), hydrotreated light naphthenic (64742-53-6)	Listed.

Pennsylvania Right-To-Know Chemical List

Distillates (petroleum), hydrotreated light naphthenic (64742-53-6)	Listed.

16. OTHER INFORMATION

NFPA Rating (Health, Fire, Reactivity)	:	0, 1, 0
MSDS Version Number	:	6.0
MSDS Effective Date	:	02/18/2010
MSDS Revisions	:	A vertical bar (|) in the left margin indicates an amendment from the previous version.
MSDS Regulation	:	The content and format of this MSDS is in accordance with the OSHA Hazard Communication Standard, 29 CFR 1910.1200.
MSDS Distribution	:	The information in this document should be made available to all who may handle the product.
Disclaimer	:	The information contained herein is based on our current knowledge of the underlying data and is intended to describe the product for the purpose of health, safety and environmental requirements only. No warranty or guarantee is expressed or implied regarding the accuracy of these data or the results to be obtained from the use of the product.

301

MATERIAL SAFETY DATA SHEET

Complies with OSHA Hazard Communication Standard 29 CFR 1910.1200

Date of Prep: 04/25/2011

SECTION 1

SUNNYSIDE CORPORATION
225 CARPENTER AVENUE
WHEELING, ILLINOIS 60090 (847) 541-5700
EMERGENCY TELEPHONE (800) 424-9300

FOR INFORMATION: (847) 541-5700
- SUNNYSIDE CORPORATION
- CHEM TREC

Product Class: Petroleum Hydrocarbon

Manufacturer's Code: 301

Trade Name: ODORLESS MINERAL SPIRITS
CALIFORNIA COMPLIANT

NPCA HMIS: Health: 1
Fire: 1
Reactivity: 0

Product Appearance and Odor: Clear, water-white liquid; mild petroleum odor.

SECTION 2 -- HAZARDOUS INGREDIENTS

OCCUPATIONAL EXPOSURE LIMITS

INGREDIENT	CAS #	PERCENT	ACGIH TLV (TWA)	ACGIH TLV (STEL)	OSHA PEL (TWA)	OSHA PEL (STEL)	VAPOR PRESSURE
Petroleum distillate	64742-47-8		N.E.	N.E.	N.E.	N.E.	0.07 MM Hg @ 20° C.

SECTION 3 -- EMERGENCY AND FIRST AID PROCEDURES

Eye Contact: Flush eyes with plenty of water for 15 minutes while holding eyelids open. Get medical attention.

Skin Contact: Remove contaminated clothing/shoes. Flush skin with water. Follow by washing with soap and water. If irritation occurs, get medical attention. Do not reuse clothing until cleaned.

Inhalation: Remove victim to fresh air and if breathing is difficult, oxygen should be provided by qualified personnel. Give artificial respiration if not breathing. Get medical attention.

Ingestion: Do not induce vomiting. If vomiting occurs spontaneously, keep head below hips to prevent aspiration of liquid into the lungs. Get medical attention.

SECTION 4 -- PHYSICAL DATA

The following data represent approximate or typical values. They do not constitute product specifications.

Boiling Range:	430-520° (F)	Vapor Density:	Heavier than air
Evaporation Rate:	Slower than ether	% Volatile By Volume:	Approx. 100%
Weight Per Gallon:	6.67 lbs.	VOC: California ARB definition:	0.5% (4g/L)
Solubility in Water:	Negligible; less than 0.1%		

SECTION 5 -- FIRE AND EXPLOSION DATA

Flammability Classification: Non-flammable
Flash Point: 205^{o}(F) Tag. Closed cup
Autoignition Temperature: 477°F
Lower Explosive Limit: 0.6%
Extinguishing Media: Carbon dioxide, foam, dry chemical, water spray. Do not use direct water stream; it will spread fire.
Unusual Fire and Explosion Hazards: Do not store or mix with strong oxidants.
Special Fire Fighting Procedures: Use air-supplied rescue equipment for enclosed areas. Cool exposed containers with water. Prevent run off from entering streams, sewers, or drinking water supply.

SECTION 6 -- HEALTH HAZARD DATA

THRESHOLD LIMIT VALUE: Not established. 166 ppm exposure recommended by manufacturer.

EFFECTS OF OVEREXPOSURE
Acute

Eye Contact: May cause irritation, discomfort, redness and swelling of the eye.

Skin Contact: Liquid is slightly irritating to the skin. Prolonged or repeated contact can result in defatting and drying of the skin which may result in skin irritation and dermatitis.

Inhalation: Vapors may cause irritation to nose, throat and respiratory tract. Breathing of high vapor concentrations may result in headaches, dizziness and other signs of nervous system depression. These effects have been observed after misuse or abuse of this product. When used in a reasonable and foreseeable manner, no adverse effects are anticipated from exposure to this product.

Ingestion: Ingestion may result in vomiting, aspiration (breathing) of vomitus into the lungs must be avoided as even small quantities may result in aspiration pneumonitis.

Chronic: Repeated skin contact may aggravate an existing dermatitis (skin condition).

Carcinogenicity: This product has not been identified as a carcinogen by NTP, IARC, or OSHA.

Medical Conditions Aggravated by Exposure: Conditions aggravated by exposure may include skin disorders and respiratory (asthma-like) disorders.

SECTION 7 -- REACTIVITY DATA

Stability: Stable

Conditions to Avoid: Heat, sparks, flame, and high energy ignition sources..

Incompatibility (Materials to Avoid): Strong oxidizing agents like liquid chlorine or concentrated oxygen.

Hazardous Decomposition Products: Thermal decomposition may yield carbon dioxide and carbon monoxide.

Hazardous Polymerization: Will not occur.

SECTION 8 -- SPILL OR LEAK PROCEDURES

Steps to be taken in case material is spilled or released: Remove ignition sources, evacuate area, avoid breathing vapor or contact with liquid. Recover free liquid or stop leak if possible. Dike large spills and use absorbent material for small spills. Keep spilled material out of sewers, ditches and bodies of water.

Waste disposal method: Incinerate under safe conditions; dispose of in accordance with local, state and federal regulations.

SECTION 9 -- SAFE HANDLING AND USE INFORMATION

Respiratory Protection: Appropriate vapor canister, self-contained breathing apparatus or supplied-air hose mask, if needed.

Ventilation: Sufficient, in volume and pattern, to keep workroom concentration below current applicable OSHA safety and health requirements. See Section 2. Use explosion-proof equipment. No smoking.

Protective Gloves: Rubber or neoprene.
Eye Protection: Chemical safety goggles.
Other Protective Equipment: Impervious clothing or boots, if needed. Emergency eye wash fountains and safety showers should be available in the immediate vicinity of any potential exposure.

SECTION 10 -- SPECIAL PRECAUTIONS

Dept. of Labor Storage Category:	Non-flammable.
Hygienic Practices:	Keep away from heat, sparks and open flame. Keep containers closed when not in use. Avoid eye contact. Avoid prolonged or repeated contact with skin. Wash skin with soap and water after contact.
Additional Precautions:	Ground containers when transferring liquid to prevent static accumulation and discharge. Additional information regarding safe handling of products with static accumulation potential can be ordered by contacting the American Petroleum Institute (API) for API Recommended Practice 2003, entitled "Protection Against Ignitions Arising Out of Static, Lighting, and Stray Currents" (American Petroleum Institute, 1720 L Street Northwest, Washington, DC 20005), or the National Fire Protection Association (NFPA) for NFPA 77 entitled "Static Electricity" (National Fire Protection Association, 1 Batterymarch Park, P.O. Box 9101, Quincy, MA 02269-9101).
Empty Container Warning:	"Empty" containers retain residue (liquid and/or vapor) and can be dangerous. Do not pressurize, cut, weld, braze, solder, drill, grind or expose such containers to heat, flame, sparks or other sources of ignition; they may explode and cause injury or death. Do not attempt to clean since residue is difficult to remove. "Empty" drums should be completely drained, properly bunged and promptly returned to supplier or disposed of in an environmentally safe manner and in accordance with governmental regulations.

SECTION 11 -- ADDITIONAL INFORMATION

This product contains the following toxic chemical(s) which are subject to the reporting requirements of Section 313 of Title III of the Superfund Amendments and Reauthorization Act of 1986 and 40 CFR Part 372:

TOXIC CHEMICAL	CAS #	APPROXIMATE % BY WEIGHT
NONE	NONE	NONE

SARA Title III Hazard Categories:	None.
Common Names:	Solvent Naphtha (Petroleum), Aliphatic Hydrocarbon, Petroleum Distillate
California Proposition 65:	This product may contain trace amounts of Benzene, Ethyl Benzene and Toluene- which are known to the State of California to cause cancer, birth defects or other reproductive harm, and may be subject to the requirements of California Proposition 65.

TRANSPORTATION Not regulated by U.S. D.O.T. as a hazardous material.

Material Safety Data Sheet
May be used to comply with OSHA's Hazard Communication Standard, 29 CFR 1910 1200. Standard must be consulted for specific requirements.

U.S. Department of Labor
Occupational Safety and Health Administration
(Non-Mandatory Form)
Form Approved
OMB No. 1218-0072

Micro-Blaze® Emergency Liquid Spill Control

Note: Blank spaces are not permitted. If any item is not applicable or no information is available, the space must be marked to indicate that.

Section I

Manufacturer's name	Verde Environmental, Inc.	Emergency Telephone Number	800 / 626-6598
Address	9223 Eastex Freeway	Telephone Number for Information	713 / 691-6468
	Houston, Texas 77093-7001	Date Prepared	01/01/2011
		Signature of Preparer	*William L. Scogin, President*

Section II—Hazardous Ingredients/Identity Information

Hazardous Components (Specific Chemical Identity, Common Name(s))	CAS Number:	OSHA PEL	ACGIH TLV	Other Limits Recommended	% (optional)

****** NO HAZARDOUS COMPONENTS OR INGREDIENTS ******

Per OSHA –29 CFR 1910.1200 -- All ingredients are organic and completely biodegrable.

Ingredients not precisely identified are proprietary or non-hazardous

Section III—Physical/Chemical Characteristics

Boiling Point	100°C	Specific Gravity (H_20 = 1)	1.0
Vapor Pressure (mm Hg)	Equiv. water	Melting Point	N / A
Vapor Density (AIR = 1)	Equiv. water	Evaporation Rate (Butyl Acetate = 1)	N / A

Solubility in Water 99%

Appearance and Odor Cream to tan, opaque liquid, perfumed

Section IV—Fire and Explosion Hazard Data

Flash Point (Method Used)	Flammable Limits	LEL	UEL
N / A	Non-flammable	----	----

Extinguishing Media Non-flammable

Special Fire Fighting Procedures None

Unusual Fire and Explosion Hazards None - **NON-FLAMMABLE**

Section V—Reactivity Data

Stability	Unstable		Conditions to Avoid
	Stable XXXX		

Incompatibility *(Materials to Avoid)* Strong acids or alkali compounds may inactivate biological cultures.

Hazardous Decomposition or Byproducts

Hazardous Polymerization	May Occur		Conditions to Avoid
	Will Not Occur	XXXX	

Section VI—Health Hazard Data

Route(s) of Entry Inhalation? Skin? Ingestion?

Health Hazards *(Acute and Chronic)* May cause diarrhea if ingested in large amounts. **NON-TOXIC**

Organisms used are non-pathogenic. These organisms are susceptible to commonly use antibiotics.

Carcinogenicity N / A NTP? N / A IARC Monographs? N / A OSHA Regulated? N / A

Signs and Symptoms of Exposure Skin: slight redness on hands and forearms if individual has a history of dermal allergic reaction.

Medical Conditions Generally Aggravated by Exposure Dermal allergic reaction on skin if susceptible person has continual exposure.

Emergency and First Aid Procedures Ingestion: Drink water or milk to dilute. Induce vomiting only if advised by physician or poison control center.

Section VII—Precautions for Safe Handling and Use

Steps to Be Taken in Case Material Is Released or Spilled May mop up spills; may flush down sanitary drain into waste water treatment lines.

Waste Disposal Method Disposal of this product or its residue must be done in accordance with all local, state and federal requirements.

Precautions to Be Taken in Handling and Storing Avoid eye contact.

Other Precautions To maintain shelf life, avoid temperatures under 32°F or over 120°F for long periods of time. Microbes are viable up to 180° F. KEEP FROM PROLONGED FREEZING.

Section VII—Control Measures

Respiratory Protection *(Specify Type)* Avoid breathing mists; mask advised if spraying in enclosed, unventilated space.

Ventilation	Local Exhaust	Special
	Mechanical *(General)*	Other Normal room ventilation.

Protective Gloves None required. Eye Protection Avoid splashing in eyes; may irritate.

Other Protective Clothing or Equipment None required.

Work/Hygienic Practices Minimize exposure in accordance with good hygiene practices.

We believe the statements, technical information and recommendations herein are reliable, but they are given without warranty or guarantee of any kind, express or implied, and we assume no responsibility for any loss, damage, or expense, direct or consequential, arising out of their use.

Material Safety Data Sheet

1 - Chemical Product and Company Identification

Manufacturer: WD-40 Company **Address: 1061 Cudahy Place (92110)** **P.O. Box 80607** **San Diego, California, USA** **92138 –0607** **Telephone:** **Emergency only: 1-888-324-7596 (PROSAR)** **Information: 1-888-324-7596** **Chemical Spills: 1-800-424-9300 (Chemtrec)** **1-703-527-3887 (International Calls)**	**Chemical Name: Organic Mixture** **Trade Name: WD-40 Aerosol** **Product Use: Lubricant, Penetrant, Drives Out Moisture, Removes and Protects Surfaces From Corrosion** **MSDS Date Of Preparation: 6/8/12**

2 – Hazards Identification

Emergency Overview:
DANGER! Flammable aerosol. Contents under pressure. Harmful or fatal if swallowed. If swallowed, may be aspirated and cause lung damage. May cause eye irritation. Avoid eye contact. Use with adequate ventilation. Keep away from heat, sparks and all other sources of ignition.

Symptoms of Overexposure:
Inhalation: High concentrations may cause nasal and respiratory irritation and central nervous system effects such as headache, dizziness and nausea. Intentional abuse may be harmful or fatal.
Skin Contact: Prolonged and/or repeated contact may produce mild irritation and defatting with possible dermatitis.
Eye Contact: Contact may be irritating to eyes. May cause redness and tearing.
Ingestion: This product has low oral toxicity. Swallowing may cause gastrointestinal irritation, nausea, vomiting and diarrhea. This product is an aspiration hazard. If swallowed, can enter the lungs and may cause chemical pneumonitis, severe lung damage and death.
Chronic Effects: None expected.
Medical Conditions Aggravated by Exposure: Preexisting eye, skin and respiratory conditions may be aggravated by exposure.

Suspected Cancer Agent:
Yes No X

3 - Composition/Information on Ingredients

Ingredient	CAS #	Weight Percent
Aliphatic Hydrocarbon	64742-47-8	45-50
Petroleum Base Oil	64742-58-1 64742-53-6 64742-56-9 64742-65-0	<25
LVP Aliphatic Hydrocarbon	64742-47-8	12-18
Carbon Dioxide	124-38-9	2-3
Non-Hazardous Ingredients	Mixture	<10

4 – First Aid Measures

Ingestion (Swallowed): Aspiration Hazard. DO NOT induce vomiting. Call physician, poison control center or the WD-40 Safety Hotline at 1-888-324-7596 immediately.
Eye Contact: Flush thoroughly with water. Remove contact lenses if present after the first 5 minutes and continue flushing for several more minutes. Get medical attention if irritation persists.
Skin Contact: Wash with soap and water. If irritation develops and persists, get medical attention.

Inhalation (Breathing): If irritation is experienced, move to fresh air. Get medical attention if irritation or other symptoms develop and persist.

5 – Fire Fighting Measures

Extinguishing Media: Use water fog, dry chemical, carbon dioxide or foam. Do not use water jet or flooding amounts of water. Burning product will float on the surface and spread fire.
Special Fire Fighting Procedures: Firefighters should always wear positive pressure self-contained breathing apparatus and full protective clothing. Cool fire-exposed containers with water. Use shielding to protect against bursting containers.
Unusual Fire and Explosion Hazards: Contents under pressure. Keep away from ignition sources and open flames. Exposure of containers to extreme heat and flames can cause them to rupture often with violent force. Vapors are heavier than air and may travel along surfaces to remote ignition sources and flash back.

6 – Accidental Release Measures

Wear appropriate protective clothing (see Section 8). Eliminate all sources of ignition and ventilate area. Leaking cans should be placed in a plastic bag or open pail until the pressure has dissipated. Contain and collect liquid with an inert absorbent and place in a container for disposal. Clean spill area thoroughly. Report spills to authorities as required.

7 – Handling and Storage

Handling: Avoid contact with eyes. Avoid prolonged contact with skin. Avoid breathing vapors or aerosols. Use only with adequate ventilation. Keep away from heat, sparks, pilot lights, hot surfaces and open flames. Unplug electrical tools, motors and appliances before spraying or bringing the can near any source of electricity. Electricity can burn a hole in the can and cause contents to burst into flames. To avoid serious burn injury, do not let the can touch battery terminals, electrical connections on motors or appliances or any other source of electricity. Wash thoroughly with soap and water after handling. Keep containers closed when not in use. Keep out of the reach of children. Do not puncture, crush or incinerate containers, even when empty.
Storage: Store in a cool, well-ventilated area, away from incompatible materials. Do not store above 120°F or in direct sunlight. U.F.C (NFPA 30B) Level 3 Aerosol.

8 – Exposure Controls/Personal Protection

Chemical	Occupational Exposure Limits
Aliphatic Hydrocarbon	1200 mg/m3 TWA (manufacturer recommended)
Petroleum Base Oil	5 mg/m3 TWA, 10 mg/m3 STEL ACGIH TLV 5 mg/m3 TWA OSHA PEL
LVP Aliphatic Hydrocarbon	1200 mg/m3 TWA (manufacturer recommended)
Carbon Dioxide	5000 ppm TWA (OSHA/ACGIH), 30,000 ppm STEL (ACGIH)
Non-Hazardous Ingredients	None Established

The Following Controls are Recommended for Normal Consumer Use of this Product
Engineering Controls: Use in a well-ventilated area.
Personal Protection:
Eye Protection: Avoid eye contact. Always spray away from your face.
Skin Protection: Avoid prolonged skin contact. Chemical resistant gloves recommended for operations where skin contact is likely.
Respiratory Protection: None needed for normal use with adequate ventilation.

For Bulk Processing or Workplace Use the Following Controls are Recommended
Engineering Controls: Use adequate general and local exhaust ventilation to maintain exposure levels below that occupational exposure limits.
Personal Protection:
Eye Protection: Safety goggles recommended where eye contact is possible.

Skin Protection: Wear chemical resistant gloves.
Respiratory Protection: None required if ventilation is adequate. If the occupational exposure limits are exceeded, wear a NIOSH approved respirator. Respirator selection and use should be based on contaminant type, form and concentration. Follow OSHA 1910.134, ANSI Z88.2 and good Industrial Hygiene practice.
Work/Hygiene Practices: Wash with soap and water after handling.

9 – Physical and Chemical Properties

Boiling Point:	361 - 369°F (183 - 187°C)	Specific Gravity:	0.8 – 0.82 @ 60°F
Solubility in Water:	Insoluble	pH:	Not Applicable
Vapor Pressure:	95-115 PSI @ 70°F	Vapor Density:	Greater than 1
Percent Volatile:	70-75%	VOC:	412 grams/liter (49.5%)
Coefficient of Water/Oil Distribution:	Not Determined	Appearance/Odor	Light amber liquid/mild odor
Flash Point:	122°F (49°C) Tag Open Cup (concentrate)	Flammable Limits: (Solvent Portion)	LEL: 0.6% UEL: 8.0%
Pour Point:	-63°C (-81.4°F) ASTM D-97	Kinematic Viscosity:	2.79-2.96cSt @ 100°F

10 – Stability and Reactivity

Stability: Stable
Hazardous Polymerization: Will not occur.
Conditions to Avoid: Avoid heat, sparks, flames and other sources of ignition. Do not puncture or incinerate containers.
Incompatibilities: Strong oxidizing agents.
Hazardous Decomposition Products: Carbon monoxide and carbon dioxide.

11 – Toxicological Information

The oral toxicity of this product is estimated to be greater than 5,000 mg/kg based on an assessment of the ingredients. This product is not classified as toxic by established criteria. It is an aspiration hazard.
None of the components of this product is listed as a carcinogen or suspected carcinogen or is considered a reproductive hazard.

12 – Ecological Information

No data is currently available.

13 - Disposal Considerations

If this product becomes a waste, it would be expected to meet the criteria of a RCRA ignitable hazardous waste (D001). However, it is the responsibility of the generator to determine at the time of disposal the proper classification and method of disposal. Dispose in accordance with federal, state, and local regulations.

14 – Transportation Information_

DOT Surface Shipping Description: Consumer Commodity, ORM-D
After 1/1/2014 UN1950, Aerosols, 2.1 Ltd. Qty (Note: Shipping Papers are not required for Limited Quantities unless transported by air or vessel – each package must be marked with the Limited Quantity Mark)
IMDG Shipping Description: UN1950, Aerosols, 2.1, LTD QTY
ICAO Shipping Description: UN1950, Aerosols, flammable, 2.1 NOTE: WD-40 does not test aerosol cans to assure that they meet the pressure and other requirements for transport by air. We do not recommend that our aerosol products be transported by air.

15 – Regulatory Information

U.S. Federal Regulations:
CERCLA 103 Reportable Quantity: This product is not subject to CERCLA reporting requirements, however, oil spills are reportable to the National Response Center under the Clean Water Act and many states have more stringent release reporting requirements. Report spills required under federal, state and local regulations.
SARA TITLE III:
Hazard Category For Section 311/312: Acute Health, Fire Hazard, Sudden Release of Pressure
Section 313 Toxic Chemicals: This product contains the following chemicals subject to SARA Title III Section 313 Reporting requirements: None
Section 302 Extremely Hazardous Substances (TPQ): None
EPA Toxic Substances Control Act (TSCA) Status: All of the components of this product are listed on the TSCA inventory.
California Safe Drinking Water and Toxic Enforcement Act (Proposition 65): This product does not contain chemicals regulated under California Proposition 65.
VOC Regulations: This product complies with the consumer product VOC limits of CARB, the US EPA and states adopting the OTC VOC rules.
Canadian Environmental Protection Act: One of the components is listed on the NDSL. All of the other ingredients are listed on the Canadian Domestic Substances List or exempt from notification.
Canadian WHMIS Classification: Class B-5 (Flammable Aerosol)
This MSDS has been prepared according to the criteria of the Controlled Products Regulation (CPR) and the MSDS contains all of the information required by the CPR.

16 – Other Information:

HMIS Hazard Rating:
Health – 1 (slight hazard), Fire Hazard – 4 (severe hazard), Reactivity – 0 (minimal hazard)

SIGNATURE:_____ TITLE: Adm. Scientific Manager

REVISION DATE: June 2012 SUPERSEDES: March 2010

MATERIAL SAFETY DATA SHEET

An explanation of terms used may be found in OSHA
29 CFR 191.1200 available from OSHA regional or area offices.

October 1, 2006

1. PRODUCT IDENTIFICATION

PRODUCT: St. Cloud Natural Clinoptilolite Zeolite **CAS No. 12173-10-3**

CHEMICAL NAME: Potassium-calcium-magnesium-aluminosilicate **SYNONYMS:** Clinoptilolite

EMPIRICAL FORMULA: (K,Ca,Mg) 2O-AL2O3-10SiO2-6H20

2. COMPANY IDENTIFICATION

COMPANY NAME: ST. CLOUD MINING COMPANY

MAILING ADDRESS: P.O. Box 1670 - Truth or Consequences, New Mexico 87901, U.S.A.

PHYSICAL ADDRESS: Winston Mill Site - Winston, New Mexico 87943, U.S.A.

PHONE NUMBER: 505-743-5215 **FAX NUMBER:** 505-743-3333 **WEBSITE:** www.stcloudmining.com

3. HAZARDOUS INGREDIENTS AND HEALTH HAZARD DATA

HAZARDOUS INGREDIENTS: May Contain 0.07-0.10% Free Silica. **ROUTES OF ENTRY:** Inhalation

HEALTH HAZARDS: Granular powder, airborne dust particles are irritating to respiratory tract. Contact with eyes and skin may cause irritation. May be harmful if inhaled. Clinoptilolite with a particle size in the respirable range was tested for carcinogenicity in rats by intratracheal instillation. No significant increase in the incidence of tumors was found. Hazard Symbols for this product: Xn.

HAZARDOUS COMPONENTS: Clinoptilolite zeolite / potassium, calcium, sodium, aluminosilicate, hydrated (a) **Percent by weight:** 100%

CAS #: 12173-10-3 **EINECS #:** Not found **Hazard Symbol:** Xn **Risk Phrases:** R 20, 36/37/38

CARCINOGENICITY: NTP? No. IARC Monographs? No. OSHA Regulated? No.

SIGNS & SYMPTOMS OF EXPOSURE: Coughing, irritation of respiratory tract.

4. FIRST AID MEASURES

SWALLOWING: If ingested in large quantities, contact physician for permission to induce vomiting.

SKIN CONTACT: Rinse with water if irritation ensues.

INHALATION: Remove the person to fresh air, rinse mouth and nasal passages with fresh water. Seek medical attention if irriation persists.

EYE CONTACT: Check for and remove contact lenses. Flush eyes with water for 15 minutes. Seek medical attention if irritation persists.

NOTES TO PHYSICIAN: St. Cloud Natural Zeolite has no additives or materials that require special treatment. However some products of St. Cloud Natural Zeolite are treated to enhance their use for special applications. Should a specialty product with additives to St. Cloud Natural Zeolite, a separate MSDS is available from the supplier.

5. PHYSICAL & CHEMICAL CHARACTERISTICS

COLOR:	White, to off white with dark specs	**BOILING POINT:**	Not applicable
ODOR:	None	**FREEZING POINT:**	Not applicable
MELTING POINT:	1800 F	**VAPOR PRESSURE:**	Not applicable
VAPOR DENSITY:	Not applicable	**SPECIFIC GRAVITY:**	2.2 - 2.4
SOLUBILITY IN WATER:	0	**EVAPORATION RATE:**	Not applicable

6. FIRE AND EXPLOSION DATA

FLASH POINT:	Not applicable	**FLAMMABLE LIMITS:**	Not applicable
LEL:	Not applicable	**UEL:**	Not applicable

EXTINGUISHING MEDIA: Not applicable

SPECIAL FIRE FIGHTING PROCEDURES: Non combustible

UNUSUAL FIRE AND EXPLOSION HAZARDS: None

7. REACTIVITY DATA

STABILITY: Stable **CONDITIONS TO AVOID:** Not applicable

INCOMPATIBILITY (Materials to avoid): None

HAZARDOUS POLYMERIZATION: Will not occur. **CONDITIONS TO AVOID:** Not applicable

8. SAFE HANDLING AND USE

STEPS TO BE TAKEN IN CASE MATERIAL IS RELEASED OR SPILLED: Physical clean up is required only to prevent sediment to surface water courses, depending upon the partilce size of the product. St. Cloud Natural Zeolite will not react or release any harmful substance to the environment.

WASTE DISPOSAL METHOD: Spills of St. Cloud Natural Zeolite should be cleaned up in a manner that minimizes the generation of dust as a potential nuisance, or may be dispersed of in any garden areas, lawn or landfill.

PRECAUTIONS TO BE TAKEN IN HANDLING AND STORAGE: Avoid breathing dust, may irritate the respiratory tract

OTHER PRECAUTIONS: None

9. EXPOSURE CONTROL MEASURES

RESPIRATORY PROTECTION:		Wear OSHA approved dust respirators to avoid nuisance dust and possible irritation
VENTILATION	**LOCAL EXHAUST:**	Exhaust ventilation is recommended for operations to avoid nuisance dust and possible irritation.
	MECHANICAL (general):	Not applicable
	SPECIAL:	Not applicable
	OTHER:	Not applicable
EYE PROTECTION:		Safety glasses or goggles should be worn to prevent dust from entering eyes.
PROTECTIVE GLOVES:		Optional. May cause drying of skin with prolonged contact.
OTHER PROTECTIVE CLOTHING OR EQUIPMENT:		Dust Respirator

10. ECOLOGICAL CONSIDERATIONS

WATERFOWL TOXICITY:	Not Applicable
AQUATIC TOXICITY:	Not Applicable
FOOD CHAIN CONCENTRATION POTENTIAL:	Not Applicable
BIOCHEMICAL OXYGEN DEMAND:	Not Applicable
ATMOSPHERIC:	Contain no ozone depleting substances.

11. TRANSPORTATION INFORMATION

Proper Shipping Name:	Non-Hazardous for Transport	IATA Hazard Class/Packaging Group:	Not Regulated
DOT Hazard Class/Packaging Group:	Not Regulated	IMDG Hazard Class:	Not Regulated
Reference:	Not Applicable	RID/ADR Dangerous Goods Code:	Not Regulated
UN/NA Identification Number:	None	UN TDG Class/Packaging Group:	Not Regulated
Label:	None Required	Hazard Identification Number (HIN):	None
Hazard Symbol:	None		

12. REGULATORY INFORMATION

CERCLA: None.

SARA Title III.313 Reportable Ingredients: None

California Prop 65: There are no chemicals present in product known to the state of California to casue cancer or reproductive toxicity.

CPR (Canadian Controlled Products Regulations): This product has been classified in accordance with the hazard criteria of the CPR and the MSDS contains all the information required by the CPR. WHMIS Classification: Not Controlled.

IDL (Canadian Ingredient Disclosure List): Components of this product identified by CAS number and listed on the Canadian IDL are shown in Section 3.

DSL / NDSL (Canadian Domestic Substances List / Non-Domestic Substance List): Components of this product identified by CAS number are not listed on the DSL or NDSL, or are otherwise in compliance with the New Substances Notifications (NSN) regulations.

EINECS (European Inventory of Existing Commercial Chemical Substances): Components of this product identified by CAS numbers are on the European inventory of existing Commercial Chemical Substances unless indicated as "not found".

WGK Water Quality Index: nwg **VbK Index:** not applicable

HMIS HAZARD RATINGS	HEALTH	1	Definitions:	* = Chronic Health Hazard	2 = MODERATE
	FLAMMABILITY	0		0 = INSIGNIFICANT	3 = HIGH
	PHYSICAL HAZARD	0		1 = SLIGHT	4 = EXTREME
	PERSONAL PROTECTIVE EQUIPMENT	E		E Safety Glasses, Gloves, Dust Respirator	

It is recommended that all recipients of this MSDS become familiar with and understand any hazards associated with this product. This information should then be made available to employees and customers who may come in contact with this material.

E.4 Additional Results of Effluent Testing

Water Treatment System Review

Report

23 May 2016

BergerABAM

Port of Vancouver/Vancouver, WA

Mr. Dan Shafar

DMS Main Office:
358 US Route One
Falmouth, ME 04105

Charles Bailey
(+1 207) 274-9712
cwbailey@nalco.com

Kenn Cygan
(+1 207) 8318115
kcygan@nalco.com

Stan Jenkins
(+44) 0-7736-354-111
sjenkins1x@nalco.com

April Yi
(+1 513) 225-3046
ayyyi@nalco.com

TABLE OF CONTENTS

Confidentiality Statement 2
Section I: Executive Summary 3
Results Summary 3
Water Characteristics 4
Initial Design with Reverse Osmosis/Sodium Zeolite Process 4
Section II: Abstract 4
Key Goals 4
Section III: Project Description 5
Operating Criteria 5
Cleaver-Brooks Chemistry Specifications 5
Water Sources 6
Methodology 10
Section IV: Evaluation 11
Modeling Observations 11
Water Inventory 11
Scenario Description 12
Scenario Evaluation 13
SCN_002 PROPOSED SCENARIO 13
Section V: Conclusions 15
Proposed Operations 15
Results Summary 15
Appendix A: City Water Analysis 16
Appendix B: Water Balance Diagrams 18
Appendix C: Analytical Detection Limits 19
Appendix D: Chemistry 20

©2016 Ecolab USA Inc. All Rights Reserved

CONFIDENTIALITY STATEMENT

This report contains information relating to the operations at the proposed west boiler house for the Port of Vancouver, Vancouver, WA. This information is confidential to each party, and as such this report should not be shared without the express written consent of all the parties involved.

Trade Marks

Ecolab, Nalco Water, Data Mobility Systems and the logos are trademarks of Ecolab USA Inc.

All other trademarks are the property of their respective owners.

CONFIDENTIALITY NOTICE: This document is intended solely for the use of the individual or entity to whom they are addressed and may contain confidential and privileged information protected by law. If you received this document in error, any review, use, dissemination, distribution, or copying of the document is strictly prohibited.

DISCLAIMER: Actual values may be different pending actual conditions. We make no warranty of any kind regarding the accuracy or sufficiency of the information contained herein due to various assumptions including proposed plant configuration and anticipated operating requirements as provided.

©2016 Ecolab USA Inc. All Rights Reserved

SECTION I: EXECUTIVE SUMMARY

Tesoro and Savage have formed a joint venture to build and operate the Vancouver Energy terminal. The proposed facility will receive and ship crude oil that originates in the midcontinent of North America and arrives at the Port of Vancouver USA by rail. The crude oil will be temporarily and safely stored in secure tanks, then transferred to customers' vessels to be shipped to West Coast oil refineries, and converted into transportation fuels and other products for U.S. consumption.

BergerABAM is providing consulting services to Tesoro and Savage on the feasibility of constructing this facility. As part of this project, BergerABAM need to obtain an environmental permit from either the state or city authorities, but require more detailed information on the expected discharge characteristics from the new facility.

Nalco has been requested to supply expertise to support the development of the project. Nalco has been requested to develop the waste water characteristics for a scenario based the following specific operating criteria.

1. **Scenarios:** The following scenario was evaluated.
    a. Average water flows based on two Cleaver Brook boilers running (SCN_000)
    b. City water feeding the boilers treated with a reverse osmosis (RO) unit followed by an off-site regenerated sodium zeolite softener (SCN_002)

RESULTS SUMMARY

- The design & operating parameters result in boiler feed water that meets all the Cleaver Brooks boiler water chemistry specifications.

- The design & operating parameters result in waste water that meets all the chemistry limits for waste water discharge.

©2016 Ecolab USA Inc. All Rights Reserved

WATER CHARACTERISTICS

INITIAL DESIGN WITH REVERSE OSMOSIS/SODIUM ZEOLITE PROCESS

1. Water flow characteristics
    a. Boiler blowdown details can be seen in Table 2 and chemistry Appendix C
        i. Cleaver Brooks specifications are met
        ii. Sulfite levels are present in the blowdown
        iii. Phosphate is present in the blowdown from city water PO_4
    b. Total waste water details can be seen in Table 3 and Table 4 and chemistry Appendix C

SECTION II: ABSTRACT

This engineering study included gathering of information on the conceptual design and extensive use of a proprietary modeling software program that replicates specified expected operating conditions of the facility. This involved computer based holistic modeling of the plant water and process systems.

KEY GOALS

1. Establish reliable water balance for the conceptual design and specified operating parameters
    a. Hydraulic flows
    b. Ionic chemistry
2. Determine the water characteristics of the following flows
    a. Boiler blowdown
    b. Total waste water
    c. Boiler feedwater
    d. Boiler cycle make up
    e. Steam condensate

©2016 Ecolab USA Inc. All Rights Reserved

SECTION III: PROJECT DESCRIPTION

OPERATING CRITERIA

Port of Vancouver, WA		
Scenario_000		
Operational Parameters		
Number of Boilers	3	
Rated Boiler Capacity each	51,750	pph
Boiler Operating	2	
Boilers on Standby	1	
Operating Pressure	125	psig
Steam Production Total	83,830	pph
Condensate Return	67,064	pph
Blowdown %	4.0%	

CLEAVER-BROOKS CHEMISTRY SPECIFICATIONS

TOTAL HARDNESS	1 PPM MAXIMUM
TOTAL ALKALINITY	600 PPM MAXIMUM
TOTAL SILICA	150 PPM MAXIMUM
IRON CONTENT	0.1 PPM MAXIMUM
PH	8.5 – 10.5
TOTAL DISSOLVED SOLIDS	2,200 TO 2,500 PPM
OXYGEN CONTENT	0 PPM
CARBON DIOXIDE	0 PPM

(SOURCE: CLEAVER-BROOKS, INC.)

©2016 Ecolab USA Inc. All Rights Reserved

WATER SOURCES

The water chemistry of the city water source (during the sampling week February 11, 2016) can be classified as slightly hard water with moderate alkalinity concentration. The hardness is primarily temporary hardness which implies lime softening can be effective in reducing hardness, alkalinity, TDS and silica as well. The reactive silica level is very high and is of concern in managing the boiler water chemistry within the OEM's water specifications.

Table 1 summarizes these critical chemistry parameters that drive water processes required to manage the water consumption and waste water discharge volume.

Table 1 City Water Chemistry

KEY WATER CONSTITUENTS	City Water
ALL UNITS IN mg/L (unless otherwise specified)	SCN_000
Ca	33.0000
K	3.3000
Li	ND
Mg	9.7000
Na	6.4000
Sr	0.1220
Zn	0.0200
Cl	6.9000
HCO3	131.4833
NO3	15.0000
PO4	0.3679
SO4	10.0000
pH su	7.7000
SiO2	48.0000

City water chemistry based on sample taken of Vancouver city water at the Nalco manufacturing plant in Vancouver, WA. The sample was analyzed through ICP for metals and IC for anions. Alkalinity was tested with auto-titration and pH with standard lab bench pH meter.

ICP: Inductively Coupled Plasma Spectroscopy

IC: Ion chromatography

See Appendix C for detection limits

©2016 Ecolab USA Inc. All Rights Reserved

Table 2: Boiler Blowdown Chemistry

KEY WATER CONSTITUENTS	Boiler BD
ALL UNITS IN mg/L (unless otherwise specified)	SCN_002
Ca	ND
K	1.0205
Mg	ND
Na	99.2036
Zn	0.0062
Cl	2.1339
HCO3	17.7951
NO3	4.6389
OH	NC
PO4	0.1138
SO3	112.5702
SO4	3.8133
Conductivity µS/cm	339.8661
pH su	10.3037
SiO2	15.3267
TDS	271.8929
Temperature °F	95.0000

Note: Elements and compounds that are not listed were either not tested (NT) or below analytical procedure detection limit (ND). There are also other values that are not applicable (NA) to this process or are calculated values that cannot be calculated (NC) on this water chemistry. A complete list can be found in Appendix D

©2016 Ecolab USA Inc. All Rights Reserved

Table 4 Drain Sump Chemistry & Specification

KEY WATER CONSTITUENTS	Final Waste
ALL UNITS IN mg/L (unless otherwise specified)	SCN_002
Ag	ND
As	ND
Ca	100.8204
Cd	ND
Cr	ND
Cu	ND
Hg	ND
K	10.1931
Mg	29.6351
Mo	ND
Na	32.0165
Ni	ND
Pb	ND
Se	ND
Tl	ND
Zn	0.0618
Cl	21.3128
CN	ND
HCO3	400.3494
NO3	47.1287
OH	ND
PO4	1.1365
SO3	12.2498
SO4	37.9369
BOD5	6.4283
Conductivity µS/cm	869.5330
FOG	7.7139
pH su	8.4188
SiO2	148.3151
TDS	695.6264
Temperature °F	75.7740

All values in mg/L unless other wise specified

©2016 Ecolab USA Inc. All Rights Reserved

Table 4 Drain Sump Chemistry & City of Vancouver Discharge Limit

KEY WATER CONSTITUENTS	City of Vancouver Discharge Limit	SCN_002
ALL UNITS IN mg/L (unless otherwise specified)	Final Waste Water Discharge	Final Waste Water Discharge
Ag	1.130000	ND
As	0.220000	ND
Cd	0.140000	ND
Cr	7.220000	ND
Cu	3.670000	ND
Hg	0.008000	ND
Mo	0.420000	ND
Ni	0.900000	ND
Pb	0.440000	ND
Se	0.310000	ND
Tl	0.530000	ND
Zn	1.640000	0.061776
CN	0.470000	NT
BOD5	500.000000	6.428280
FOG	50.000000	7.713936
pH su	10.000000	8.418850
Temperature °F	104.000000	75.774029

<u>All values meet waste specification base.</u>

Chromium value is for total Cr (Cr^{+3} and Cr^{+6}).
A nominal amount of BOD and FOG was added to the sanitary waste flow. Also additional amount to FOG was added to the condensate that is delivered to the floor drains.

©2016 Ecolab USA Inc. All Rights Reserved

METHODOLOGY

DMS was supplied with the original design diagrams, expected operating parameters and water chemistry analyses from Nalco. DMS then developed a line diagram model of the water balance using Visio and the proprietary DMS-Water™ software system to replicate the proposed operating conditions of the facility.

DMS evaluated the proposed plant configurations regarding water chemistry based on operations feedback and our intimate knowledge of practical industrial water treatment as it pertains to steam plant process operations. The results of these studies were captured in this report.

The scope of the work can be found in Appendix A.

Disclaimer:

The enclosed information is based on an average chemistry for the city water source. DMS-Water™ modeling was matched to a snapshot of chemistry data that indicates that our modeling sufficiently represents the water balance and system. Conditions such as incursion of air borne debris into the cooling tower and plant operational changes can cause actual conditions to differ from our modeling. While actual chemistry conditions and chemical costs most likely will differ from our modeling, the implied improvements and actual costs should be reflected with actual operations.

©2016 Ecolab USA Inc. All Rights Reserved

SECTION IV: EVALUATION

MODELING OBSERVATIONS

- Boiler blowdown chemistry complies with both ASME and Cleaver-Brooks silica, alkalinity and pH specifications
- Waste water chemistry and flow complies with expected discharge permits.

WATER INVENTORY

Table 4 Incoming Water Inventory

Water In (gpm)	SCN_002
City Water	
• City Water to Plant	48.1
Subtotal	48.1
Total Water In	48.1

Table 5 Outgoing Water Inventory

Water Out (gpm)	SCN_002
Evaporation	
• Misc. condensate loss 1	9.1
• Misc. condensate loss 2	17.9
Subtotal	27.0
Final Discharge	
• Final Discharge	15.6
Subtotal	15.6
Tank-Waste Manual	
• Rail car condensate losses	5.5
Subtotal	5.5
Total Water Out	48.1

©2016 Ecolab USA Inc. All Rights Reserved

SCENARIO DESCRIPTION

DMS investigated five (5) alternative designs to address the goals of this engineering study, and following discussion with BergerABAM chose SCN_002 as the design that best meets the objectives of this project.

1. Determine the water characteristics
    a. Boiler blowdown
    b. Total waste water
    c. Boiler feedwater
    d. Boiler cycle makeup
    e. Steam condensate
2. Meet the water specifications for boiler water and waste water discharge.

.

©2016 Ecolab USA Inc. All Rights Reserved

SCENARIO EVALUATION

SCN_002 PROPOSED SCENARIO

This is the Base Case of the new facility for the proposed west boiler house. It utilizes the design and operating conditions agreed between Nalco and BergerABAM.

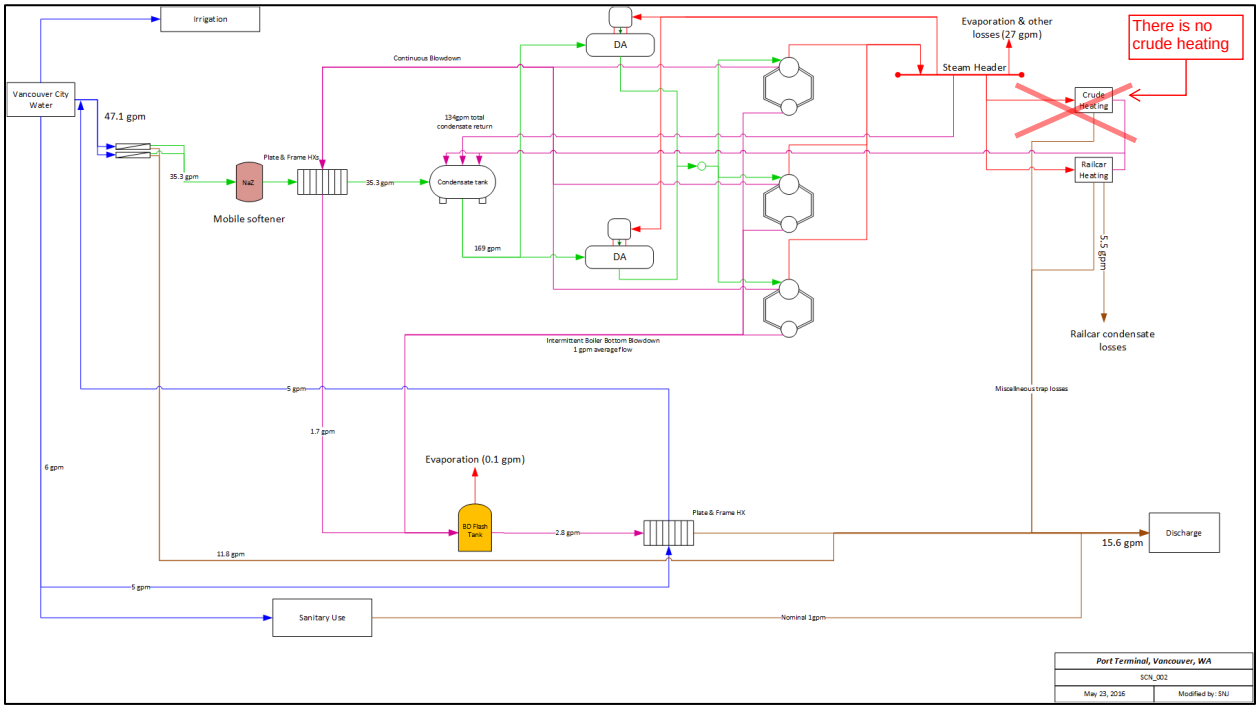

Summary: The incoming city water is treated with a reverse osmosis unit followed by an off-site regenerated (mobile) sodium zeolite softener. Blowdown water from the boilers is cooled by two plate and frame heat exchangers, both using water that will ultimately feed the boilers. The first heat exchanger cools the blowdown with softened water that feeds the deaerator. The second heat exchanger uses fresh city water prior to feeding the reverse osmosis unit.

Results: This case established that the boiler chemistry meets both ASME and Cleaver-Brooks boiler water chemistry specification for silica, pH and other ion concentrations. The boiler blowdown chemistry contains sulfite and phosphate. The sulfite is the results of boiler water oxygen scavenger use and the phosphate is the results of phosphate in the city water make up.

©2016 Ecolab USA Inc. All Rights Reserved

Table 6 SCN_002 Boiler Blowdown Chemistry

KEY WATER CONSTITUENTS	SCN_002	
ALL UNITS IN mg/L (unless otherwise specified)	Boiler BD	Boiler BD Specification
Ca	0.0000	1.0
K	1.0205	
Mg	0.0000	
Na	99.2036	
Zn	0.0062	
Cl	2.1339	
HCO3	17.7951	
NO3	4.6389	
OH	0.0000	
PO4	0.1138	
SO3	112.5702	
SO4	3.8133	
Conductivity µS/cm	339.8661	
pH su	10.3037	8.5-10.5
SiO2	15.3267	150
TDS	271.8929	2,200
Temperature °F	95.0000	

©2016 Ecolab USA Inc. All Rights Reserved

SECTION V: CONCLUSIONS

PROPOSED OPERATIONS

Scenario: The following scenario was evaluated.

a. Average water flows based on two Cleaver Brook boilers running
b. City water feeding the boilers treated with a reverse osmosis (RO) unit followed by an off-site regenerated sodium zeolite softener.

RESULTS SUMMARY

- The design & operating parameters result in boiler feed water that meets all the Cleaver Brooks boiler water chemistry specifications.

- The design & operating parameters result in waste water that meets all the chemistry limits for waste water discharge.

- Detailed chemistry for all key water flows can be found in Appendix C.

©2016 Ecolab USA Inc. All Rights Reserved

APPENDIX A: CITY WATER ANALYSIS

Customer Analytical Services
1601 West Diehl Road Naperville IL60563-1198
Phone: 630-305-1000 Fax: 630-305-2921 Email: customeranalyticalservices@nalco.com

NALCO
An Ecolab Company

Final - Report Number: 1664169
VANCOUVER PLANT - 8510 FRUIT VALLEY RD - VANCOUVER - WA - USA
Representative: PETER KANDA

Sample Number	NW190302
Date Sampled	11-Feb-2016 14:00
Date Received	12-Feb-2016
Date Completed	17-Feb-2016
Date Authorized	17-Feb-2016

Water Analysis

This sample was analyzed as received, the results being as follows.

Sampling point Vancouver City Water

Water

Acid Extractable Metals **Test Method: CW14024**	**Filtered**	**Total**
Aluminum (Al)	<0.03 mg/L	<0.03 mg/L
Barium (Ba)	0.009 mg/L	0.009 mg/L
Boron (B)	<0.02 mg/L	<0.02 mg/L
Cadmium (Cd)	<0.005 mg/L	<0.005 mg/L
Calcium (Ca)	33 mg/L	33 mg/L
Calcium (CaCO3)	82 mg/L	83 mg/L
Chromium (Cr)	<0.015 mg/L	<0.015 mg/L
Copper (Cu)	<0.03 mg/L	0.03 mg/L
Iron (Fe)	<0.02 mg/L	<0.02 mg/L
Lead (Pb)	<0.10 mg/L	<0.10 mg/L
Lithium (Li)	<0.005 mg/L	<0.005 mg/L
Magnesium (Mg)	9.7 mg/L	9.7 mg/L
Magnesium (CaCO3)	40 mg/L	40 mg/L
Manganese (Mn)	<0.005 mg/L	<0.005 mg/L
Molybdenum (Mo)	<0.04 mg/L	<0.04 mg/L
Nickel (Ni)	<0.01 mg/L	<0.01 mg/L
Phosphorus (P)	0.12 mg/L	0.12 mg/L
Potassium (K)	3.3 mg/L	3.3 mg/L
Silicon (Si)	22 mg/L	23 mg/L
Silica (SiO2)	48 mg/L	48 mg/L
Sodium (Na)	6.4 mg/L	6.4 mg/L
Sodium (CaCO3)	14 mg/L	14 mg/L
Strontium (Sr)	0.122 mg/L	0.123 mg/L
Vanadium (V)	<0.01 mg/L	<0.01 mg/L
Zinc (Zn)	0.02 mg/L	0.02 mg/L
Total Hardness (CaCO3)	120 mg/L	120 mg/L

COMPANY WITH QUALITY SYSTEM CERTIFIED BY DNV
= ISO 9001:2008 =

Authorized by Kimberly Jackson
Principal Chemist

Page 1 of 2

©2016 Ecolab USA Inc. All Rights Reserved

Customer Analytical Services
1601 West Diehl Road Naperville IL60563-1198
Phone: 630-305-1000 Fax: 630-305-2921 Email: customeranalyticalservices@nalco.com

NALCO
An Ecolab Company

Final Report Number: 1664169
VANCOUVER PLANT - 8510 FRUIT VALLEY RD - VANCOUVER - WA - USA
Representative: PETER KANDA

Sample Number	NW100302
Date Sampled	11-Feb-2016 14:00
Date Received	12-Feb-2016
Date Completed	17-Feb-2016
Date Authorized	17-Feb-2016

Water Analysis

This sample was analyzed as received, the results being as follows:

Sampling point Vancouver City Water

Anions **Test Method: CW15060**	**Filtered**
Chloride (Cl)	6.9 mg/L
Nitrite (NO2)	<0.20 mg/L
Bromide (Br)	<0.20 mg/L
Nitrate (NO3)	15 mg/L
Sulfate (SO4)	10 mg/L
Chloride (CaCO3)	9.7 mg/L
Nitrate (CaCO3)	12 mg/L
Sulfate (CaCO3)	11 mg/L

Alkalinity **Test Method: CW11059**	**Total**
Total Alkalinity (CaCO3)	120 mg/L
Phenolphthalein Alkalinity (CaCO3)	<10 mg/L
Bicarbonate (CaCO3)	120 mg/L

Other Analytes	**Test Method**	**Total**
Conductivity at 25°C	CW11063	290 µS/cm
pH @ 25°C	CW11059	7.7 pH Units

COMPANY WITH QUALITY SYSTEM CERTIFIED BY DNV = ISO 9001:2008 =

Authorized by Kimberly Jackson
Principal Chemist

Page 2 of 2

©2016 Ecolab USA Inc. All Rights Reserved

APPENDIX B: WATER BALANCE DIAGRAMS

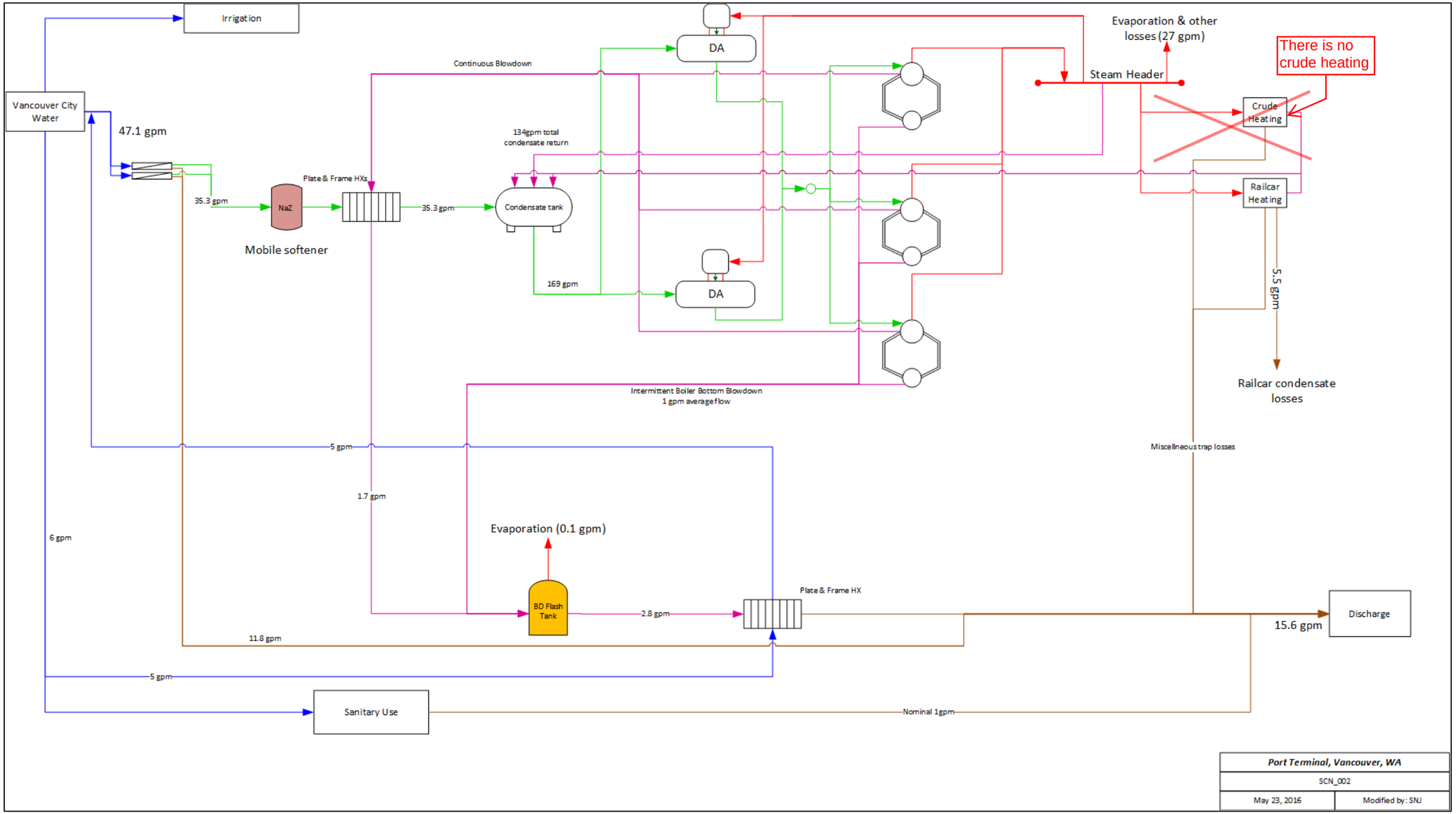

©2016 Ecolab USA Inc. All Rights Reserved

APPENDIX C: ANALYTICAL DETECTION LIMITS

Test Code Provides the following analyses(mg/l) for Total and Soluble cations and anions:
(Cations by ICP; Anions by IC)
(Alkalinity values by auto-titration)

	Reportable Limits mg/l *		Reportable Limits mg/l *
Aluminum (Al)	0.03	Chloride (Cl)	0.1
Barium (Ba)	0.005	Nitrite (NO2)	0.2
Boron (B)		Bromide (Br)	0.2
Cadmium (Cd)	0.005	Nitrate (NO3)	0.2
Calcium (Ca)	0.05	Sulfate (SO4)	0.2
Calcium (CaCO3)		Chloride (CaCO3)	
Chromium (Cr)	0.015	Nitrate (CaCO3)	
Copper (Cu)	0.03	Sulfate (CaCO3)	
Iron (Fe)	0.02		
Lead (Pb)	0.11	Total Alkalinity (CaCO3)	10
Lithium (Li)	0.005	Phenolphthalein Alkalinity (CaCO3)	10
Magnesium (Mg)	0.15	Bicarbonate (CaCO3)	
Magnesium (CaCO3)		Carbonate (CaCO3)	
Manganese (Mn)	0.005		
Molybdenum (Mo)	0.04	Inorganic Phosphate (PO4)	2
Nickel (Ni)	0.01	Ortho Phosphate (PO4)	2
Phosphorus (P)	0.03	Organic Phosphate (PO4)	2
Potassium (K)	0.12	Polyphosphate (PO4)	2
Silicon (Si)		Total Phosphate (PO4)	2
Silica (SiO2)			
Sodium (Na)		Conductivity at 25°C - meter	1
Sodium (CaCO3)		pH @ 25°C - meter	1
Strontium (Sr)	0.005		
Vanadium (V)	0.01		
Zinc (Zn)	0.01		

* Dependent on total dissolved solids concentration, and test method.

* Dependent on total dissolved solids concentration and test method.

©2016 Ecolab USA Inc. All Rights Reserved

APPENDIX D: CHEMISTRY

Scenario: Vancouver Terminal SCN_002
Flow Name: City Water
Flow Rate: 48.0563 gpm

Cation			
Symbol	**Name**	**mg/L as $CaCO_3$**	**mg/L as Ion**
Ag	Silver	ND	ND
Al	Aluminum	ND	ND
As	Arsenic	ND	ND
Au	Gold	ND	ND
B	Boron	ND	ND
Ba	Barium	0.0066	0.0090
Be	Beryllium	ND	ND
Ca	Calcium	82.4110	33.0000
Cd	Cadmium	ND	ND
Co	Cobalt	ND	ND
Cr	Chromium	ND	ND
Cu	Copper	ND	ND
Cu I	Copper (cuprous)	ND	ND
Fe	Iron	ND	ND
Fe II	Iron (ferrous)	ND	ND
H+	Hydronium	ND	ND
Hg	Mercury	ND	ND
K	Potassium	4.2238	3.3000
Li	Lithium	ND	ND
Mg	Magnesium	39.9442	9.7000
Mn	Manganese (Manganous)	ND	ND
Mo	Molybdenum	ND	ND
Na	Sodium	13.9313	6.4000
NH4	Ammonia	NT	NT
Ni	Nickel	ND	ND
Pb	Lead	ND	ND
S	Sulfur	NA	NA
Sb	Antimony	ND	ND
Se	Selenium	ND	ND
Si	Silicon	ND	ND
Sm	Samarium	ND	ND
Sn	Tin	ND	ND
Sr	Strontium	0.1394	0.1220
Ti	Titanium	ND	ND
Tl	Thallium (thallic)	ND	ND
U	Uranium (valence 4)	ND	ND
V	Vanadium	ND	ND
Zn	Zinc	0.0275	0.0200

©2016 Ecolab USA Inc. All Rights Reserved

Scenario: Vancouver Terminal SCN_002
Flow Name: City Water
Flow Rate: 48.0563 gpm

Anion			
Symbol	**Name**	**mg/L as $CaCO_3$**	**mg/L as Ion**
B4O7	Borate	ND	ND
Br	Bromide	ND	ND
Cl	Chloride	9.7397	6.9000
CN	Cyanide	ND	ND
CO3	Carbonate	ND	ND
F	Fluoride	NT	NT
HCO3	Bicarbonate	107.8371	131.4834
I	Iodide	ND	ND
MoO4	Molybdate	ND	ND
NO2	Nitrite	ND	ND
NO3	Nitrate	12.1063	15.0000
OH	Hydrate	ND	ND
P	Phosphorous (Valence 3)	ND	ND
PO4	Phosphate (as PO4)	0.5816	0.3679
SiO3	Silicate	ND	ND
SO3	Sulfite	ND	ND
SO4	Sulfate	10.4188	10.0000

©2016 Ecolab USA Inc. All Rights Reserved

Scenario: Vancouver Terminal SCN_002
Flow Name: City Water
Flow Rate: 48.0563 gpm

Other			
Symbol	**Name**	**mg/L as $CaCO_3$**	**mg/L as Ion**
$/1000 gal	Dollar per 1000 gallon	NT	NT
BOD5	5 Day Biochemical Oxygen Demand	NT	NT
CO2	Carbon Dioxide	NT	NT
CO2-gas	Carbon Dioxide Gas (Undissolved)	NT	NT
COD	Chemical Oxygen Demand	NT	NT
Conductivity	Conductivity	270.3779	270.3779
Enthalpy	Enthalpy	NC	NC
FOG	Free Oil and Grease	NT	NT
H2S	Hydrogen Sulfide	NT	NT
Ionic Strength	Ionic Strength	0.0042	0.0042
Langlier Stability Index	Langlier Stability Index	-0.3479	-0.3479
M Alkalinity	Total Alkalinity	107.8371	107.8371
NH3	Ammonia	NC	NC
O2	Oxygen	NT	NT
OCl	Hypoclorite	NT	NT
P Alkalinity	P Alkalinity	ND	ND
pH	pH	7.7000	7.7000
pHeq	pHeq	7.5180	7.5180
pHs	pHs	8.0479	8.0479
psia	Pounds per Square Inch Absolute	14.6960	14.6960
Puckorius Scale Index	Puckorius Scale Index	8.5778	8.5778
Ryznar Index	Ryznar Index	8.3958	8.3958
SAR	Saline Absorption Ratio	0.2511	0.2511
Screenings	Screenings	NA	NA
Silica Sol	Silica Sol	NA	NA
SiO2	Silica	39.9786	48.0000
SiO2-Colloidal	SiO2-Colloidal	0.8329	1.0000
Sulfur	Sulfur	NA	NA
TDS	Total Disolved Solids	216.3023	216.3023
TempF	Temperature Fahrenheit	70.0000	70.0000
TOC	Total Organic Carbon	NT	NT
Total Hardness	Total Hardness	122.3552	122.3552
TSS	Total Suspended Solids	NT	NT

©2016 Ecolab USA Inc. All Rights Reserved

Scenario: Vancouver Terminal SCN_002
Flow Name: Softened Water
Flow Rate: 35.2922 gpm

Cation			
Symbol	Name	mg/L as $CaCO_3$	mg/L as Ion
Ag	Silver	ND	ND
Al	Aluminum	ND	ND
As	Arsenic	ND	ND
Au	Gold	ND	ND
B	Boron	ND	ND
Ba	Barium	0.0001	0.0001
Be	Beryllium	0.0000	0.0000
Ca	Calcium	0.0102	0.0041
Cd	Cadmium	0.0000	0.0000
Co	Cobalt	0.0000	0.0000
Cr	Chromium	0.0000	0.0000
Cu	Copper	0.0000	0.0000
Cu I	Copper (cuprous)	0.0000	0.0000
Fe	Iron	0.0000	0.0000
Fe II	Iron (ferrous)	0.0000	0.0000
H+	Hydronium	0.0000	0.0000
Hg	Mercury	0.0000	0.0000
K	Potassium	0.0634	0.0495
Li	Lithium	0.0000	0.0000
Mg	Magnesium	0.0074	0.0018
Mn	Manganese (Manganous)	0.0000	0.0000
Mo	Molybdenum	0.0000	0.0000
Na	Sodium	2.0372	0.9359
NH4	Ammonia	0.0000	0.0000
Ni	Nickel	0.0000	0.0000
Pb	Lead	0.0000	0.0000
S	Sulfur	0.0000	0.0000
Sb	Antimony	0.0000	0.0000
Se	Selenium	0.0000	0.0000
Si	Silicon	0.0000	0.0000
Sm	Samarium	0.0000	0.0000
Sn	Tin	0.0000	0.0000
Sr	Strontium	0.0021	0.0018
Ti	Titanium	0.0000	0.0000
Tl	Thallium (thallic)	0.0000	0.0000
U	Uranium (valence 4)	0.0000	0.0000
V	Vanadium	0.0000	0.0000
Zn	Zinc	0.0004	0.0003

©2016 Ecolab USA Inc. All Rights Reserved

Scenario: Vancouver Terminal SCN_002
Flow Name: Softened Water
Flow Rate: 35.2922 gpm

Anion			
Symbol	**Name**	**mg/L as $CaCO_3$**	**mg/L as Ion**
B4O7	Borate	ND	ND
Br	Bromide	ND	ND
Cl	Chloride	0.1461	0.1035
CN	Cyanide	ND	ND
CO3	Carbonate	ND	ND
F	Fluoride	NT	NT
HCO3	Bicarbonate	1.5916	1.9406
I	Iodide	ND	ND
MoO4	Molybdate	ND	ND
NO2	Nitrite	ND	ND
NO3	Nitrate	0.1816	0.2250
OH	Hydrate	ND	ND
P	Phosphorous (Valence 3)	ND	ND
PO4	Phosphate (as PO4)	0.0087	0.0055
SiO3	Silicate	ND	ND
SO3	Sulfite	ND	ND
SO4	Sulfate	0.1927	0.1850

©2016 Ecolab USA Inc. All Rights Reserved

Scenario: Vancouver Terminal SCN_002
Flow Name: Softened Water
Flow Rate: 35.2922 gpm

Other			
Symbol	**Name**	**mg/L as $CaCO_3$**	**mg/L as Ion**
$/1000 gal	Dollar per 1000 gallon	0.0000	NC
BOD5	5 Day Biochemical Oxygen Demand	NT	NT
CO2	Carbon Dioxide	0.4103	0.3608
CO2-gas	Carbon Dioxide Gas (Undissolved)	0.8038	0.7069
COD	Chemical Oxygen Demand	NT	NT
Conductivity	Conductivity	4.3164	4.3164
Enthalpy	Enthalpy	NC	NC
FOG	Free Oil and Grease	ND	ND
H2S	Hydrogen Sulfide	NT	NT
Ionic Strength	Ionic Strength	0.0000	0.0000
Langlier Stability Index	Langlier Stability Index	-6.7348	-6.7348
M Alkalinity	Total Alkalinity	1.5916	1.5916
NH3	Ammonia	NT	NT
O2	Oxygen	NT	NT
OCl	Hypoclorite	NT	NT
P Alkalinity	P Alkalinity	ND	ND
pH	pH	6.8153	6.8153
pHeq	pHeq	4.8357	4.8357
pHs	pHs	13.5502	13.5502
psia	Pounds per Square Inch Absolute	44.6959	44.6959
Puckorius Scale Index	Puckorius Scale Index	22.2646	22.2646
Ryznar Index	Ryznar Index	20.2850	20.2850
SAR	Saline Absorption Ratio	3.0620	3.0620
Screenings	Screenings	NA	NA
Silica Sol	Silica Sol	NA	NA
SiO2	Silica	0.5997	0.7200
SiO2-Colloidal	SiO2-Colloidal	0.0125	0.0150
Sulfur	Sulfur	NA	NA
TDS	Total Disolved Solids	3.4531	3.4531
TempF	Temperature Fahrenheit	75.2618	75.2618
TOC	Total Organic Carbon	NT	NT
Total Hardness	Total Hardness	0.0176	0.0176
TSS	Total Suspended Solids	2.8509	2.8509

©2016 Ecolab USA Inc. All Rights Reserved

Scenario: Vancouver Terminal SCN_002
Flow Name: Condensate return
Flow Rate: 133.926 gpm

Cation			
Symbol	Name	mg/L as $CaCO_3$	mg/L as Ion
Ag	Silver	ND	ND
Al	Aluminum	ND	ND
As	Arsenic	ND	ND
Au	Gold	ND	ND
B	Boron	ND	ND
Ba	Barium	ND	ND
Be	Beryllium	ND	ND
Ca	Calcium	ND	ND
Cd	Cadmium	ND	ND
Co	Cobalt	ND	ND
Cr	Chromium	ND	ND
Cu	Copper	ND	ND
Cu I	Copper (cuprous)	ND	ND
Fe	Iron	ND	ND
Fe II	Iron (ferrous)	ND	ND
H+	Hydronium	ND	ND
Hg	Mercury	ND	ND
K	Potassium	0.0008	0.0006
Li	Lithium	ND	ND
Mg	Magnesium	ND	ND
Mn	Manganese (Manganous)	ND	ND
Mo	Molybdenum	ND	ND
Na	Sodium	0.1260	0.0579
NH4	Ammonia	ND	ND
Ni	Nickel	ND	ND
Pb	Lead	ND	ND
S	Sulfur	ND	ND
Sb	Antimony	ND	ND
Se	Selenium	ND	ND
Si	Silicon	ND	ND
Sm	Samarium	ND	ND
Sn	Tin	ND	ND
Sr	Strontium	ND	ND
Ti	Titanium	ND	ND
Tl	Thallium (thallic)	ND	ND
U	Uranium (valence 4)	ND	ND
V	Vanadium	ND	ND
Zn	Zinc	ND	ND

©2016 Ecolab USA Inc. All Rights Reserved

Scenario: Vancouver Terminal SCN_002
Flow Name: Condensate return
Flow Rate: 133.926 gpm

Anion			
Symbol	**Name**	**mg/L as $CaCO_3$**	**mg/L as Ion**
B4O7	Borate	ND	ND
Br	Bromide	ND	ND
Cl	Chloride	0.0018	0.0012
CN	Cyanide	ND	ND
CO3	Carbonate	0.0298	0.0179
F	Fluoride	0.0000	0.0000
HCO3	Bicarbonate	0.0085	0.0104
I	Iodide	ND	ND
MoO4	Molybdate	ND	ND
NO2	Nitrite	ND	ND
NO3	Nitrate	0.0022	0.0027
OH	Hydrate	ND	ND
P	Phosphorous (Valence 3)	ND	ND
PO4	Phosphate (as PO4)	0.0001	0.0001
SiO3	Silicate	NA	NA
SO3	Sulfite	0.0821	0.0657
SO4	Sulfate	0.0023	0.0022

©2016 Ecolab USA Inc. All Rights Reserved

Scenario: Vancouver Terminal SCN_002
Flow Name: Condensate return
Flow Rate: 133.926 gpm

Other			
Symbol	**Name**	**mg/L as $CaCO_3$**	**mg/L as Ion**
$/1000 gal	Dollar per 1000 gallon	NC	NC
BOD5	5 Day Biochemical Oxygen Demand	NT	NT
CO2	Carbon Dioxide	NT	NT
CO2-gas	Carbon Dioxide Gas (Undissolved)	0.2035	0.1790
COD	Chemical Oxygen Demand	NT	NT
Conductivity	Conductivity	0.1984	0.1984
Enthalpy	Enthalpy	NC	NC
FOG	Free Oil and Grease	NT	NT
H2S	Hydrogen Sulfide	NT	NT
Ionic Strength	Ionic Strength	NC	NC
Langlier Stability Index	Langlier Stability Index	NC	NC
M Alkalinity	Total Alkalinity	0.0383	0.0383
NH3	Ammonia	NT	NT
O2	Oxygen	NT	NT
OCl	Hypoclorite	NT	NT
P Alkalinity	P Alkalinity	0.0149	0.0149
pH	pH	7.5337	7.5337
pHeq	pHeq	2.4644	2.4644
pHs	pHs	0.0000	0.0000
psia	Pounds per Square Inch Absolute	19.6960	19.6960
Puckorius Scale Index	Puckorius Scale Index	NC	NC
Ryznar Index	Ryznar Index	NC	NC
SAR	Saline Absorption Ratio	NC	NC
Screenings	Screenings	NA	NA
Silica Sol	Silica Sol	NA	NA
SiO2	Silica	0.0001	0.0001
SiO2-Colloidal	SiO2-Colloidal	ND	ND
Sulfur	Sulfur	NA	NA
TDS	Total Disolved Solids	0.1587	0.1587
TempF	Temperature Fahrenheit	227.1465	227.1465
TOC	Total Organic Carbon	NT	NT
Total Hardness	Total Hardness	NC	NC
TSS	Total Suspended Solids	0.0345	0.0345

©2016 Ecolab USA Inc. All Rights Reserved

Scenario: Vancouver Terminal SCN_002
Flow Name: Boiler Feed Water
Flow Rate: 169.218 gpm

Cation			
Symbol	Name	mg/L as $CaCO_3$	mg/L as Ion
Ag	Silver	ND	ND
Al	Aluminum	ND	ND
As	Arsenic	ND	ND
Au	Gold	ND	ND
B	Boron	ND	ND
Ba	Barium	ND	ND
Be	Beryllium	ND	ND
Ca	Calcium	0.0021	0.0009
Cd	Cadmium	ND	ND
Co	Cobalt	ND	ND
Cr	Chromium	ND	ND
Cu	Copper	ND	ND
Cu I	Copper (cuprous)	ND	ND
Fe	Iron	ND	ND
Fe II	Iron (ferrous)	ND	ND
H+	Hydronium	ND	ND
Hg	Mercury	ND	ND
K	Potassium	0.0138	0.0108
Li	Lithium	ND	ND
Mg	Magnesium	0.0015	0.0004
Mn	Manganese (Manganous)	ND	ND
Mo	Molybdenum	0.0000	0.0000
Na	Sodium	1.5724	0.7224
NH4	Ammonia	ND	ND
Ni	Nickel	ND	ND
Pb	Lead	ND	ND
S	Sulfur	ND	ND
Sb	Antimony	ND	ND
Se	Selenium	ND	ND
Si	Silicon	ND	ND
Sm	Samarium	ND	ND
Sn	Tin	ND	ND
Sr	Strontium	0.0004	0.0004
Ti	Titanium	ND	ND
Tl	Thallium (thallic)	ND	ND
U	Uranium (valence 4)	ND	ND
V	Vanadium	ND	ND
Zn	Zinc	0.0001	0.0001

©2016 Ecolab USA Inc. All Rights Reserved

Scenario: Vancouver Terminal SCN_002
Flow Name: Boiler Feed Water
Flow Rate: 169.218 gpm

Anion			
Symbol	**Name**	**mg/L as $CaCO_3$**	**mg/L as Ion**
B4O7	Borate	ND	ND
Br	Bromide	ND	ND
Cl	Chloride	0.0319	0.0226
CN	Cyanide	ND	ND
CO3	Carbonate	1.3142	0.7879
F	Fluoride	NT	NT
HCO3	Bicarbonate	0.0959	0.1169
I	Iodide	ND	ND
MoO4	Molybdate	ND	ND
NO2	Nitrite	ND	ND
NO3	Nitrate	0.0396	0.0491
OH	Hydrate	ND	ND
P	Phosphorous (Valence 3)	ND	ND
PO4	Phosphate (as PO4)	0.0019	0.0012
SiO3	Silicate	NT	NT
SO3	Sulfite	0.0650	0.0520
SO4	Sulfate	0.0420	0.0403

©2016 Ecolab USA Inc. All Rights Reserved

Scenario: Vancouver Terminal SCN_002
Flow Name: Boiler Feed Water
Flow Rate: 169.218 gpm

Other			
Symbol	**Name**	**mg/L as $CaCO_3$**	**mg/L as Ion**
$/1000 gal	Dollar per 1000 gallon	NC	NC
BOD5	5 Day Biochemical Oxygen Demand	NT	NT
CO2	Carbon Dioxide	NT	NT
CO2-gas	Carbon Dioxide Gas (Undissolved)	NT	NT
COD	Chemical Oxygen Demand	NT	NT
Conductivity	Conductivity	2.2561	2.2561
Enthalpy	Enthalpy	NC	NC
FOG	Free Oil and Grease	ND	ND
H2S	Hydrogen Sulfide	NT	NT
Ionic Strength	Ionic Strength	NC	NC
Langlier Stability Index	Langlier Stability Index	-3.6228	-3.6228
M Alkalinity	Total Alkalinity	1.4101	1.4101
NH3	Ammonia	NT	NT
O2	Oxygen	NT	NT
OCl	Hypoclorite	NT	NT
P Alkalinity	P Alkalinity	0.6571	0.6571
pH	pH	9.1021	9.1021
pHeq	pHeq	4.7586	4.7586
pHs	pHs	12.7249	12.7249
psia	Pounds per Square Inch Absolute	24.6959	24.6959
Puckorius Scale Index	Puckorius Scale Index	20.6912	20.6912
Ryznar Index	Ryznar Index	16.3478	16.3478
SAR	Saline Absorption Ratio	5.1753	5.1753
Screenings	Screenings	NA	NA
Silica Sol	Silica Sol	NA	NA
SiO2	Silica	0.1252	0.1503
SiO2-Colloidal	SiO2-Colloidal	0.0026	0.0031
Sulfur	Sulfur	NA	NA
TDS	Total Disolved Solids	1.8049	1.8049
TempF	Temperature Fahrenheit	240.0000	240.0000
TOC	Total Organic Carbon	NT	NT
Total Hardness	Total Hardness	0.0037	0.0037
TSS	Total Suspended Solids	0.6219	0.6219

©2016 Ecolab USA Inc. All Rights Reserved

Scenario: Vancouver Terminal SCN_002
Flow Name: Boiler BD
Flow Rate: 1.69218 gpm

Cation			
Symbol	Name	mg/L as $CaCO_3$	mg/L as Ion
Ag	Silver	ND	ND
Al	Aluminum	ND	ND
As	Arsenic	ND	ND
Au	Gold	ND	ND
B	Boron	ND	ND
Ba	Barium	ND	ND
Be	Beryllium	ND	ND
Ca	Calcium	ND	ND
Cd	Cadmium	ND	ND
Co	Cobalt	ND	ND
Cr	Chromium	ND	ND
Cu	Copper	ND	ND
Cu I	Copper (cuprous)	ND	ND
Fe	Iron	ND	ND
Fe II	Iron (ferrous)	ND	ND
H+	Hydronium	ND	ND
Hg	Mercury	ND	ND
K	Potassium	1.3062	1.0205
Li	Lithium	ND	ND
Mg	Magnesium	ND	ND
Mn	Manganese (Manganous)	ND	ND
Mo	Molybdenum	ND	ND
Na	Sodium	215.9435	99.2036
NH4	Ammonia	ND	ND
Ni	Nickel	ND	ND
Pb	Lead	ND	ND
S	Sulfur	ND	ND
Sb	Antimony	ND	ND
Se	Selenium	ND	ND
Si	Silicon	ND	ND
Sm	Samarium	ND	ND
Sn	Tin	ND	ND
Sr	Strontium	ND	ND
Ti	Titanium	ND	ND
Tl	Thallium (thallic)	ND	ND
U	Uranium (valence 4)	ND	ND
V	Vanadium	ND	ND
Zn	Zinc	0.0085	0.0062

©2016 Ecolab USA Inc. All Rights Reserved

Scenario: Vancouver Terminal SCN_002
Flow Name: Boiler BD
Flow Rate: 1.69218 gpm

Anion			
Symbol	**Name**	**mg/L as $CaCO_3$**	**mg/L as Ion**
B4O7	Borate	ND	ND
Br	Bromide	ND	ND
Cl	Chloride	3.0121	2.1339
CN	Cyanide	ND	ND
CO3	Carbonate	51.0323	30.5973
F	Fluoride	0.0000	0.0000
HCO3	Bicarbonate	14.5948	17.7951
I	Iodide	ND	ND
MoO4	Molybdate	ND	ND
NO2	Nitrite	ND	ND
NO3	Nitrate	3.7440	4.6389
OH	Hydrate	ND	ND
P	Phosphorous (Valence 3)	ND	ND
PO4	Phosphate (as PO4)	0.1799	0.1138
SiO3	Silicate	NA	NA
SO3	Sulfite	140.7221	112.5702
SO4	Sulfate	3.9730	3.8133

©2016 Ecolab USA Inc. All Rights Reserved

Scenario: Vancouver Terminal SCN_002
Flow Name: Boiler BD
Flow Rate: 1.69218 gpm

Other			
Symbol	**Name**	**mg/L as $CaCO_3$**	**mg/L as Ion**
$/1000 gal	Dollar per 1000 gallon	NC	NC
BOD5	5 Day Biochemical Oxygen Demand	NT	NT
CO2	Carbon Dioxide	NT	NT
CO2-gas	Carbon Dioxide Gas (Undissolved)	NT	NT
COD	Chemical Oxygen Demand	NT	NT
Conductivity	Conductivity	339.8661	339.8661
Enthalpy	Enthalpy	NC	NC
FOG	Free Oil and Grease	ND	ND
H2S	Hydrogen Sulfide	NT	NT
Ionic Strength	Ionic Strength	0.0042	0.0042
Langlier Stability Index	Langlier Stability Index	0.0000	0.0000
M Alkalinity	Total Alkalinity	65.6271	65.6271
NH3	Ammonia	NT	NT
O2	Oxygen	NT	NT
OCl	Hypoclorite	NT	NT
P Alkalinity	P Alkalinity	25.5162	25.5162
pH	pH	10.3037	10.3037
pHeq	pHeq	7.2020	7.2020
pHs	pHs	NC	NC
psia	Pounds per Square Inch Absolute	14.6960	14.6960
Puckorius Scale Index	Puckorius Scale Index	NC	NC
Ryznar Index	Ryznar Index	NC	NC
SAR	Saline Absorption Ratio	NC	NC
Screenings	Screenings	NA	NA
Silica Sol	Silica Sol	NA	NA
SiO2	Silica	12.7654	15.3267
SiO2-Colloidal	SiO2-Colloidal	ND	ND
Sulfur	Sulfur	NA	NA
TDS	Total Disolved Solids	271.8929	271.8929
TempF	Temperature Fahrenheit	95.0000	95.0000
TOC	Total Organic Carbon	NT	NT
Total Hardness	Total Hardness	NC	NC
TSS	Total Suspended Solids	59.1845	59.1845

©2016 Ecolab USA Inc. All Rights Reserved

Scenario: Vancouver Terminal SCN_002
Flow Name: RO Waste Water
Flow Rate: 11.7641 gpm

Cation			
Symbol	Name	mg/L as $CaCO_3$	mg/L as Ion
Ag	Silver	ND	ND
Al	Aluminum	ND	ND
As	Arsenic	ND	ND
Au	Gold	ND	ND
B	Boron	ND	ND
Ba	Barium	0.0259	0.0356
Be	Beryllium	0.0000	0.0000
Ca	Calcium	325.9355	130.5150
Cd	Cadmium	ND	ND
Co	Cobalt	ND	ND
Cr	Chromium	ND	ND
Cu	Copper	ND	ND
Cu I	Copper (cuprous)	ND	ND
Fe	Iron	ND	ND
Fe II	Iron (ferrous)	ND	ND
H+	Hydronium	ND	ND
Hg	Mercury	ND	ND
K	Potassium	16.7051	13.0515
Li	Lithium	ND	ND
Mg	Magnesium	157.9792	38.3635
Mn	Manganese (Manganous)	ND	ND
Mo	Molybdenum	ND	ND
Na	Sodium	59.9000	27.5178
NH4	Ammonia	ND	ND
Ni	Nickel	ND	ND
Pb	Lead	ND	ND
S	Sulfur	ND	ND
Sb	Antimony	ND	ND
Se	Selenium	ND	ND
Si	Silicon	ND	ND
Sm	Samarium	ND	ND
Sn	Tin	ND	ND
Sr	Strontium	0.5512	0.4825
Ti	Titanium	ND	ND
Tl	Thallium (thallic)	ND	ND
U	Uranium (valence 4)	ND	ND
V	Vanadium	ND	ND
Zn	Zinc	0.1086	0.0791

©2016 Ecolab USA Inc. All Rights Reserved

Scenario: Vancouver Terminal SCN_002
Flow Name: RO Waste Water
Flow Rate: 11.7641 gpm

Anion			
Symbol	**Name**	**mg/L as $CaCO_3$**	**mg/L as Ion**
B4O7	Borate	ND	ND
Br	Bromide	ND	ND
Cl	Chloride	38.5206	27.2895
CN	Cyanide	ND	ND
CO3	Carbonate	ND	ND
F	Fluoride	NT	NT
HCO3	Bicarbonate	421.6943	514.1622
I	Iodide	ND	ND
MoO4	Molybdate	ND	ND
NO2	Nitrite	ND	ND
NO3	Nitrate	47.8805	59.3250
OH	Hydrate	ND	ND
P	Phosphorous (Valence 3)	ND	ND
PO4	Phosphate (as PO4)	2.3004	1.4552
SiO3	Silicate	NA	NA
SO3	Sulfite	ND	ND
SO4	Sulfate	50.8097	48.7672

©2016 Ecolab USA Inc. All Rights Reserved

Scenario: Vancouver Terminal SCN_002
Flow Name: RO Waste Water
Flow Rate: 11.7641 gpm

Other			
Symbol	**Name**	**mg/L as $CaCO_3$**	**mg/L as Ion**
$/1000 gal	Dollar per 1000 gallon	NC	NC
BOD5	5 Day Biochemical Oxygen Demand	NT	NT
CO2	Carbon Dioxide	0.4103	0.3608
CO2-gas	Carbon Dioxide Gas (Undissolved)	0.8038	0.7069
COD	Chemical Oxygen Demand	NT	NT
Conductivity	Conductivity	1076.3053	1076.3053
Enthalpy	Enthalpy	NC	NC
FOG	Free Oil and Grease	NT	NT
H2S	Hydrogen Sulfide	NT	NT
Ionic Strength	Ionic Strength	0.0166	0.0166
Langlier Stability Index	Langlier Stability Index	1.3187	1.3187
M Alkalinity	Total Alkalinity	421.6943	421.6943
NH3	Ammonia	NT	NT
O2	Oxygen	NT	NT
OCl	Hypoclorite	NT	NT
P Alkalinity	P Alkalinity	ND	ND
pH	pH	8.1808	8.1808
pHeq	pHeq	8.3856	8.3856
pHs	pHs	6.8621	6.8621
psia	Pounds per Square Inch Absolute	44.6959	44.6959
Puckorius Scale Index	Puckorius Scale Index	5.3387	5.3387
Ryznar Index	Ryznar Index	5.5435	5.5435
SAR	Saline Absorption Ratio	0.5430	0.5430
Screenings	Screenings	NA	NA
Silica Sol	Silica Sol	NA	NA
SiO2	Silica	158.1153	189.8400
SiO2-Colloidal	SiO2-Colloidal	3.2941	3.9550
Sulfur	Sulfur	NA	NA
TDS	Total Disolved Solids	861.0442	861.0442
TempF	Temperature Fahrenheit	75.2618	75.2618
TOC	Total Organic Carbon	NT	NT
Total Hardness	Total Hardness	483.9146	483.9146
TSS	Total Suspended Solids	0.0000	0.0000

©2016 Ecolab USA Inc. All Rights Reserved

Scenario: Vancouver Terminal SCN_002
Flow Name: Final Waste
Flow Rate: 15.5563 gpm

Cation			
Symbol	Name	mg/L as $CaCO_3$	mg/L as Ion
Ag	Silver	ND	ND
Al	Aluminum	ND	ND
As	Arsenic	ND	ND
Au	Gold	ND	ND
B	Boron	ND	ND
Ba	Barium	0.0200	0.0275
Be	Beryllium	0.0000	0.0000
Ca	Calcium	251.7791	100.8204
Cd	Cadmium	ND	ND
Co	Cobalt	ND	ND
Cr	Chromium	ND	ND
Cu	Copper	ND	ND
Cu I	Copper (cuprous)	ND	ND
Fe	Iron	ND	ND
Fe II	Iron (ferrous)	ND	ND
H+	Hydronium	ND	ND
Hg	Mercury	ND	ND
K	Potassium	13.0465	10.1931
Li	Lithium	ND	ND
Mg	Magnesium	122.0360	29.6351
Mn	Manganese (Manganous)	ND	ND
Mo	Molybdenum	ND	ND
Na	Sodium	69.6925	32.0165
NH4	Ammonia	ND	ND
Ni	Nickel	ND	ND
Pb	Lead	ND	ND
S	Sulfur	ND	ND
Sb	Antimony	ND	ND
Se	Selenium	ND	ND
Si	Silicon	ND	ND
Sm	Samarium	ND	ND
Sn	Tin	ND	ND
Sr	Strontium	0.4258	0.3727
Ti	Titanium	ND	ND
Tl	Thallium (thallic)	ND	ND
U	Uranium (valence 4)	ND	ND
V	Vanadium	ND	ND
Zn	Zinc	0.0848	0.0618

©2016 Ecolab USA Inc. All Rights Reserved

Scenario: Vancouver Terminal SCN_002
Flow Name: Final Waste
Flow Rate: 15.5563 gpm

Anion			
Symbol	**Name**	**mg/L as $CaCO_3$**	**mg/L as Ion**
B4O7	Borate	ND	ND
Br	Bromide	ND	ND
Cl	Chloride	30.0843	21.3128
CN	Cyanide	ND	ND
CO3	Carbonate	3.9780	2.3851
F	Fluoride	NT	NT
HCO3	Bicarbonate	328.3498	400.3494
I	Iodide	ND	ND
MoO4	Molybdate	ND	ND
NO2	Nitrite	ND	ND
NO3	Nitrate	38.0370	47.1287
OH	Hydrate	ND	ND
P	Phosphorous (Valence 3)	ND	ND
PO4	Phosphate (as PO4)	1.7966	1.1365
SiO3	Silicate	NA	NA
SO3	Sulfite	15.3133	12.2498
SO4	Sulfate	39.5258	37.9369

©2016 Ecolab USA Inc. All Rights Reserved

Scenario: Vancouver Terminal SCN_002
Flow Name: Final Waste
Flow Rate: 15.5563 gpm

Other			
Symbol	**Name**	**mg/L as $CaCO_3$**	**mg/L as Ion**
$/1000 gal	Dollar per 1000 gallon	NC	NC
BOD5	5 Day Biochemical Oxygen Demand	6.4283	6.4283
CO2	Carbon Dioxide	NT	NT
CO2-gas	Carbon Dioxide Gas (Undissolved)	NT	NT
COD	Chemical Oxygen Demand	NT	NT
Conductivity	Conductivity	869.5330	869.5330
Enthalpy	Enthalpy	NC	NC
FOG	Free Oil and Grease	7.7139	7.7139
H2S	Hydrogen Sulfide	NT	NT
Ionic Strength	Ionic Strength	0.0133	0.0133
Langlier Stability Index	Langlier Stability Index	1.3559	1.3559
M Alkalinity	Total Alkalinity	332.3278	332.3278
NH3	Ammonia	NT	NT
O2	Oxygen	NT	NT
OCl	Hypoclorite	NT	NT
P Alkalinity	P Alkalinity	1.9890	1.9890
pH	pH	8.4188	8.4188
pHeq	pHeq	8.2341	8.2341
pHs	pHs	7.0630	7.0630
psia	Pounds per Square Inch Absolute	37.3828	37.3828
Puckorius Scale Index	Puckorius Scale Index	5.8918	5.8918
Ryznar Index	Ryznar Index	5.7071	5.7071
SAR	Saline Absorption Ratio	0.7188	0.7188
Screenings	Screenings	NA	NA
Silica Sol	Silica Sol	NA	NA
SiO2	Silica	123.5298	148.3151
SiO2-Colloidal	SiO2-Colloidal	2.5446	3.0552
Sulfur	Sulfur	NA	NA
TDS	Total Disolved Solids	695.6264	695.6264
TempF	Temperature Fahrenheit	75.7740	75.7740
TOC	Total Organic Carbon	NT	NT
Total Hardness	Total Hardness	373.8151	373.8151
TSS	Total Suspended Solids	6.4404	6.4404

©2016 Ecolab USA Inc. All Rights Reserved

©2016 Ecolab USA Inc. All Rights Reserved

F.1 Facility Site Map

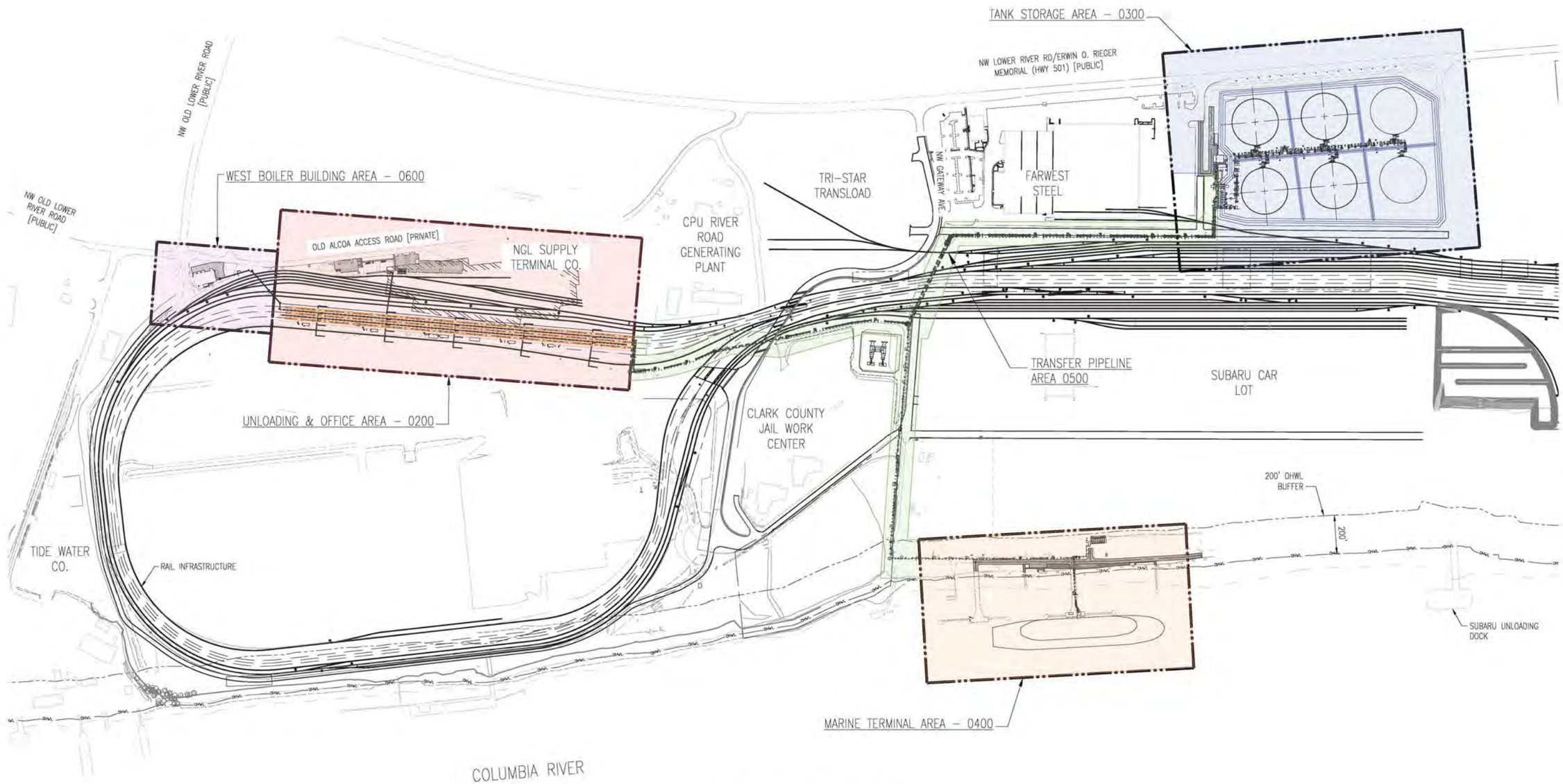

OVERALL SITE – PLAN VIEW
1"=250'

H.5 Stormwater Drainage Map

Copyright © Berger/ABAM. All Rights Reserved.

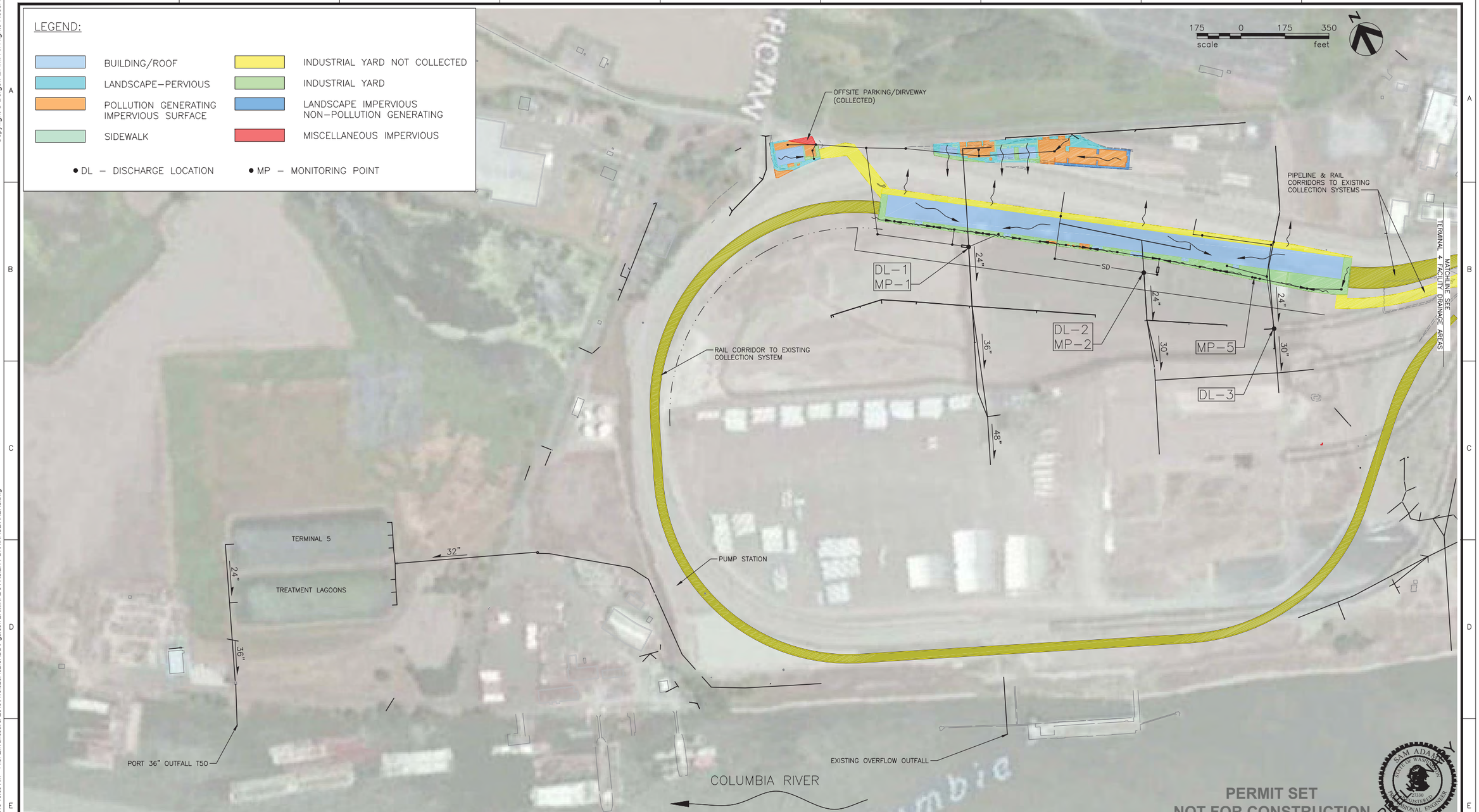

NO.	DATE	REVISION	BY	CK'D	APP

BergerABAM
700 NE Multnomah Street, Suite 900
Portland, Oregon 97232-4189
(503) 872-4100 FAX: (503) 872-4101

VANCOUVER ENERGY
Tesoro Savage Petroleum Terminal LLC

PROJECT:
VANCOUVER ENERGY
PORT OF VANCOUVER, WASHINGTON

DESCRIPTION:
TERMINAL 5 – FACILITY DRAINAGE SYSTEM & PROPOSED SURFACING

DESIGN:	DRS	START DATE:	2/26/2015	SCALE:	AS SHOWN
DRAWN:	TNP	PRINT DATE:	10/12/2015	PROJECT MANAGER:	SAVAGE_PM
CHECKED:	MCH	APPROVED:	SA	SIZE:	24x36
DRAWING NUMBER				SHEET	REV.
				1/1	

Last Saved by: Tony.pritchett on: Feb 26, 2015 10:06 AM File: Q:\Vancouver\2013\A13.0267\02\CAD\DFigures\TERMINAL 5 FACILITY DRAINAGE AREAS.dwg

Copyright © Berger/ABAM. All Rights Reserved.

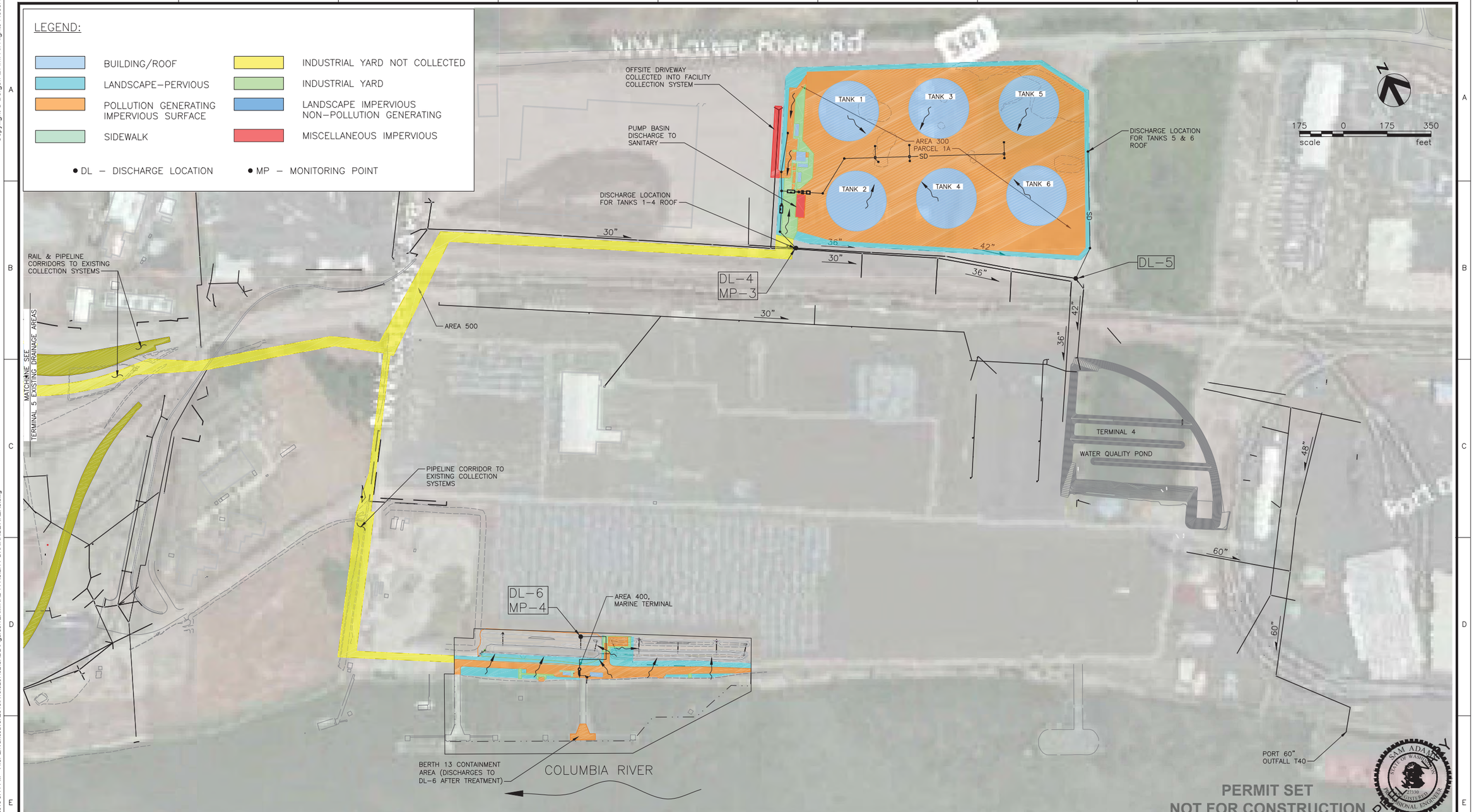

NO.	DATE	REVISION	BY	CK'D	APP

BergerABAM
700 NE Multnomah Street, Suite 900
Portland, Oregon 97232-4189
(503) 872-4100 FAX: (503) 872-4101

VANCOUVER ENERGY
Tesoro Savage Petroleum Terminal LLC

PROJECT:
VANCOUVER ENERGY
PORT OF VANCOUVER, WASHINGTON

DESCRIPTION:
TERMINAL 4 – FACILITY DRAINAGE SYSTEMS & PROPOSED SURFACING

DESIGN:	DRS	START DATE:	2/24/2015	SCALE:	AS SHOWN
DRAWN:	TNP	PRINT DATE:	2/26/2015	PROJECT MANAGER:	SAVAGE_PM
CHECKED:	MCH	APPROVED:	SA	SIZE:	24x36
DRAWING NUMBER				SHEET	REV.
				1/1	

Last Saved by: Tony.pritchett on: Feb 24, 2015 5:41 PM File: Q:\Vancouver\2013\A13.0267\02\CAD\Figures\TERMINAL 4 FACILITY DRAINAGE AREAS.dwg

Section 5.3 Stormwater Discharge Permit Application

BergerABAM

210 East 13th Street, Suite 300, Vancouver, Washington 98660-3231
360/823-6100 • 360/823-6101 Fax • www.abam.com

27 May 2016

Mr. Stephen Posner, Manager
Energy Facility Site Evaluation Council
Washington Utilities and Transportation Commission
P.O. Box 43172
Olympia, WA 98504-3172

Subject: Vancouver Energy
EFSEC Application No. 2013-01, Docket No. EF131590
Response to 19 February 2016 Letter Regarding Industrial National Pollutant Discharge Elimination System Permit Application Review

Dear Mr. Posner:

This letter responds in part to your letter of 19 February 2016 regarding Washington State Department of Ecology (Ecology) comments on the application by Tesoro Savage Petroleum Terminal LLC (Applicant) for an Industrial National Pollutant Discharge Elimination System (NPDES) permit for Vancouver Energy. Below we have reproduced the comments, taken from your 19 February 2016 letter, in *italics* and we show our responses in regular text.

In addition, Ecology requested updates to the NPDES Engineering Report; the updates are being completed and will be submitted under separate cover for Energy Facility Site Evaluation Council (EFSEC) review.

1. City of Vancouver Pretreatment Permit

> *A pretreatment permit issued by the City of Vancouver (City) is required to discharge industrial wastewater, in this case, wastewater from the West boiler area and pump basin, to the City wastewater treatment plant. Appendix M of the revised engineering report dated October 15, 2015 contains two correspondences between the City and the applicant. However, there is no pretreatment permit/approval by the City included in Appendix M. Without information on wastewater characterization and expected treatment level of the oil/water separator, EFSEC is unable to verify the effluent can meet the city pretreatment standards. The engineering report may be conditionally approved pending the approval of the City to accept discharge from the facility.*

The Applicant respectfully disagrees with EFSEC's position that the pretreatment permit must be issued by the City of Vancouver (City). As you know, the City and the Applicant filed motions to Administrative Law Judge Noble requesting a ruling supporting its position that EFSEC must issue the permit. The City submitted a motion to Administrative Law Judge Noble in support of EFSEC's position[1]. The Applicant has submitted a response to the City's Motion on 28 April 2016 and expects a ruling that EFSEC, not the City, is responsible for issuing the pretreatment permit[2].

The Applicant's motion does not question the need to comply with all applicable pretreatment standards. To that end, the Applicant completed a detailed wastewater characterization for the proposed industrial wastewater discharge streams. Detailed modeling of the boiler plant was completed by DMS-Nalco and is based upon DMS-Nalco's expertise modeling, maintaining, and servicing local boiler facilities. The full wastewater characterization report is attached for reference. A summary of the results compared to the City's discharge limits are summarized in Table 1. The industrial wastewater discharges from the Facility will meet the requirements of the City's Pre-Treatment Ordinance in VMC 14.10.

The City commented in Section 14.04 of their land use and zoning consistency motion submitted to EFSEC that "the applicant has provided sufficient information to grant preliminary approval related to this standard. Final civil engineering review and approval is required." Concurrently with this letter, the Applicant is submitting the required civil plans to the City for review as part of the pretreatment and wastewater discharge approval.

In addition, the Applicant proposes the following revisions to industrial wastewater capture and handling at the Facility to further minimize discharge of pollutants into the City's sewer system.

- Pump Basin Stormwater Discharges: The pump basin located at Area 300 will be covered by a steel-framed shed roof to isolate stormwater from the pump basin. A sump and downstream containment tank will be provided to collect any washdown or drips or leaks resulting from maintenance activities. Liquid wastes collected in the tank will be hauled off by a licensed hauler for the type of liquids within the tank. The likely receiving facility for these wastes will be Safety Kleen (Clackamas, Oregon) or similar.

---

[1] In the Matter of Application No. 2013-01, Tesoro Savage LLC, Vancouver Energy Distribution Terminal, Case No. 15-001, City of Vancouver's Motion for Order Ruling that EFSEC Lacks Authority to Issue Pre-Treatment Discharge Permit, March 29, 2016.

[2] In the Matter of Application No. 2013-01, Tesoro Savage LLC, Vancouver Energy Distribution Terminal, Case No. 15-001, Vancouver Energy's Response in Opposition to the City of Vancouver's Motion for Order Ruling that EFSEC Lacks Authority to Issue Pre-Treatment Discharge Permit, 28 April 2016.

- Fire Pump Cooling Water Discharges: The fire pump cooling water discharges result from the weekly maintenance cycling (30 minutes per week for each pump) of fire pumps located in Areas 200, 300, and 400. The Applicant has conducted a wastewater characterization of the fire pump cooling water discharges (see Table 1 attached). The fire pump cooling water will be sourced directly from the City's water supply without contact with any other chemicals or constituents; therefore, the discharge will be the same as the inlet water chemistry.

  - Area 200 fire pump cooling water will be collected in the already proposed containment tank system installed in Area 200. The contents of the containment tank system will be hauled off site to a facility, such as PPV Inc., described in Item 7 below.

  - Area 300 fire pump cooling water will be collected in a 1,000-gallon permanent surge tank where it will be tested for chlorine residual and temperature prior to being released to the City sewer system. The cooling water will only be released once the chlorine residual and temperature meet City's pre-treatment ordinance discharge limits in VMC 14.10.

  - Area 400 fire pump cooling water will be collected in a 1,000-gallon permanent storage tank. The tank contents will be hauled off site once per week.

The Applicant believes that disposal to sanitary sewer is the preferred option and that a pretreatment permit can and should be issued by EFSEC. The Applicant is concerned that a City permit would be subject to a separate review and appeal process, rather than the integrated process envisioned by Ch. 80.50 RCW.

For that reason, the Applicant has investigated and confirmed two alternative means by which industrial wastewater can be disposed of without directing discharges to the City's publicly owned treatment works (POTW). These are summarized as follows.

Alternative 1: Boiler Wastewater Discharge to NPDES Outfall
This alternative would reroute the discharges from the Boiler Building (Area 600) to the proposed on-site stormwater collection system. The discharges from the boiler plant as analyzed by DMS-Nalco are suitable for discharge to the Columbia River through the existing stormwater system. Additional treatment for temperature may be required following detailed engineering design of the systems to meet the anti-degradation water quality standard within the Columbia River.

If this alternative is selected as the preferred alternative, a Tier II anti-degradation water quality standards review will be completed for the Facility to demonstrate that Facility

discharges from the Boiler Building will not result in a detectable change in water quality.

Under this alternative the fire pump cooling water discharge from Area 300 will be converted from a discharge to the City's sanitary sewer system to a collection tank and hauled off. The tank will be pumped once per week and contents hauled to PPV Inc. or similar authorized facility.

Alternative 2: Boiler Wastewater Haul Off
This alternative would capture and temporarily store on site the discharges from the Boiler Building (Area 600). The stored boiler plant discharges would be stored in an on-site steel storage tank and hauled off. It is anticipated that the haul-off option would result in an average of additional 2.5 truck trips per day during operation of the Facility. The haul and disposal would be completed by Bravo Environmental and PPV Inc. or similar. The wastewater constituents of the discharge was provided to PPV Inc. and reviewed by their in-house staff which prepared a summary of the proposed treatment process to be used for the Terminal's wastewater.

Under this alternative the fire pump cooling water discharge from Area 300 will be converted from a discharge to the City's sanitary sewer system to a collection tank and hauled off. The tank will be pumped once per week and contents hauled to PPV Inc. or similar.

The Applicant is requesting that EFSEC review and provide comments on each of these two alternatives to a POTW discharge. We are also requesting a meeting with EFSEC staff and the appropriate Ecology reviewers to discuss each of these alternatives that could be pursued in the event that the Applicant's motion is denied.

The following table summarizes the key constituents identified in the City's local pre-treatment ordinance in VMC 14.10.080, Table 14.10.080-1. As shown in the table below, the wastewater discharge from Area 600 meets all of the performance specifications of the City's pre-treatment ordinance.

Table 1. Wastewater Discharges Compared with City's Pre-treatment Limits

Key Water Constituents	Pre-Treatment Limit Specifications	Area 600 Boiler Building	Fire Pump Cooling
	Final Wastewater Discharge	Final Wastewater Discharge	Final Wastewater Discharge
Ag (mg/L)	1.13	ND	ND
As(mg/L)	0.22	ND	ND
Cd(mg/L)	0.14	ND	ND

Key Water Constituents	Pre-Treatment Limit Specifications	Area 600 Boiler Building	Fire Pump Cooling
	Final Wastewater Discharge	Final Wastewater Discharge	Final Wastewater Discharge
Cr(mg/L)	7.22	ND	ND
Cu(mg/L)	3.67	ND	ND
Hg(mg/L)	0.008	ND	ND
Mo(mg/L)	0.42	ND	ND
Ni(mg/L)	0.90	ND	ND
Pb(mg/L)	0.44	ND	ND
Se(mg/L)	0.31	ND	ND
Tl(mg/L)	0.53	ND	ND
Zn(mg/L)	1.64	0.062	0.02
CN(mg/L)	0.47	NT	ND
BOD5 (mg/L)	500	6.43	NT
FOG(mg/L)	50	7.7	NT
pH (SU)	5.5-10	8.4	7.7
Temp (degrees F)	104	75.8	70.0

Notes: ND – Not Detected, NT – Not Tested

The Applicant completed a detailed wastewater characterization for the proposed industrial wastewater discharge streams. Detailed modeling of the boiler plant was completed by DMS-Nalco and is based upon DMS-Nalco's expertise in modeling, maintaining, and servicing local boiler facilities. The full wastewater characterization report is attached for reference. Detailed wastewater characterization for the two industrial wastewater sources (boiler plant wastewater and fire pump cooling water) is summarized above in Table 1 and compared with the City's pretreatment discharge limits.

2. Area 200 Unloading and Office (Subsection 1.4.2.1)

> *This section states "Boiler blowdown (process wastewater) from Area 600 will be pumped to this area for on-site oil-water separation and discharge to the sewer." However in section 1.4.2.5, it states "boiler blowdown will be temperature treated using a heat exchanger and chemical neutralization if needed… A downstream oil-water separator is also included in the design prior to discharge. Process wastewater from this area is discharged to the gravity sewer described in Area 200 above." Section 8.3.2 states "Blowdown temperature at the boiler plant would be lowered to permit allowable levels with a cooling system that uses potable water as the coolant. Coolant water would be mixed along with boiler blowdown." Please clarify which*

> *type of treatment will be employed to treat boiler blowdown prior to discharging to the city sanitary sewer system.*

The Applicant will correct the statement in Sections 1.4.2.1, 1.4.2.5, and 8.3.2 for consistency. The following describes how the Applicant will treat and discharge boiler blowdown.

Boiler plant discharges from Area 600 will not require treatment to meet discharge requirements for the City's pretreatment ordinance with the exception of possible chemical neutralization for pH, and temperature. If pH adjustment is necessary, treatment will be provided by an automatic treatment system supplied by the boiler manufacturer. The Applicant has revised its design regarding cooling of the boiler blowdown. Rather than diluting with water to achieve the required temperature as previously described in subsection 1.4.2.1 in the October 2015 Engineering Report, and in order to further minimize water consumption and volumes of wastewater discharge, a non-contact tube and shell heat exchanger will be used to cool the discharge temperature to a maximum of 104 degrees Fahrenheit. Potable raw water will not be mixed with the boiler blowdown as coolant.

The treated and cooled boiler plant discharges will be pumped to the on-site gravity sewer installed within Area 200; it will not be comingled with water discharged to sanitary sewer from Area 600.[3] Discharges from Area 200 will be routed through an on-site oil-water separator prior to discharge to the City's sanitary sewer.

To clarify, the oil-water separator that is proposed in Area 200 on the sewer discharge from the Area 600 Boiler Building is included as part of the Facility's operations spill prevention control and countermeasure plan (SPCCP) and is unrelated to treatment of boiler plant discharges.

3. Administration and Support Buildings (Subsection 5.2.2.1)

> *The report states there are two double wall containment tanks located to the southeast of the easternmost administration/support building. The report also states those tanks will be operated such that 825 bbl of capacity is reserved to contain an entire railcar (plus 10 percent). However, there is no discussion on the impact to the tank capacity caused by the additional rail car wash water since the rail car washing water flow was not addressed in the previous report. Without the information, Ecology is unable to verify the tanks have sufficient capacity to store wastewater from the unloading building and contain spills in the building as required.*

The volumes of wash water and wastewater generated by washing the exteriors of rail cars were accounted for in the 2013 Application for Site Certification and subsequent engineering

[3] See response to Item 1 above regarding the haul-off alternative that has also been identified.

and permitting documents as part of the "miscellaneous part/equipment wash." The containment tanks will have a cumulative capacity of 1,500 bbl or 63,000 gallons.

The secondary containment collection system including piping from the rail containment pans, and surge tanks include a total capacity of 2,900 gallons (approximately 69 bbls). The trenches between the rail unloading stations located with the Area 200 rail unloading area have capacity to contain 33,400 bbls. The total hydraulic containment and collection system within Area 200 totals 34,969 bbls.

The three sources of wastewater contributing to the containment tanks at Area 200 are the miscellaneous part/equipment wash water (includes occasional rail car exterior washing), Area 200 fire pump cooling water and the condensate discharge for haul off. The total volumes of wastewater from these two sources are expected to range between 7,548 gpd (179 bbl/day) and a maximum of 10,852 gpd (258 bbl/day).

4. Rail Car Washing (Subsection 6.1.6.1)

> *The revised report (page 44) states frequency of railcar exterior washing is one railcar per month based on experience of the applicant at facilities receiving one unit train per day. Assuming each unit train contains 120 railcars, the terminal will receive oil from 3,600 railcars per month and only one of 3600 railcars requires pressure washing. Please provide the source of the operational data and how much water is required to pressure wash each railcar. The report states process wastewater including railcar wash water and other wastewater sources in the unloading facility is discharged to two containment tanks located at the admin/support area of Area 200. Content of those tanks will be hauled off site and disposed of by a licensed hauling and disposal company at an appropriate location. Please identify the receiving facility, treatment process employed and ultimate disposal point(s) of all wastewater generated at the facility that is disposed of offsite.*

The frequency of washing is based upon the Applicant's experience operating similar loading and unloading facilities[4]. The Facility is being permitted to receive an average of four unit trains per day, which would, therefore, equate to approximately four railcars per month that would require exterior washing. The average railcar washing activities include wiping any visible oil on the outside of the railcar with a cleaner (Simple Green or similar) and a rag. When washing is necessary, a 5-gallon-per-minute pressure washer is used to help remove any residual oils. This washdown is usually less than 15 minutes per railcar. Therefore, volumes contributed from railcar washing are expected to be less than 300 gallons per month.

[4] Personal communication with Jared Larrabee and David Corpron.

The majority of the miscellaneous equipment/parts wash water is used for cleaning fittings and facility washdown. To estimate the total liquid haul off, volumes from a similar facility were reviewed. Based upon the design of the similar facility that sheds rainwater such that it is included with the haul-off volumes; the maximum estimated haul off volume from the unloading building for miscellaneous parts wash, facility washdown, and railcar exterior washing for the Facility will be approximately 1,000 gallons per day (gpd) and a maximum of 2,000 gpd.

As discussed above, the Applicant has not signed a contract for hauling off, disposing of, or recycling the contents of the containment tanks, but as indicated in this letter has identified companies which will be able to accept these discharges.

5. Northern pipeline, Terminal 4 stormwater system (Subsection 1.4.1.1)

> *The report states that the northern pipeline currently discharging stormwater to the Terminal 4 water quality pond will be re-routed to bypass the water quality pond and reconnect to the Port existing stormwater outfall to the Columbia River. The project is ongoing and will occur prior to the construction of the facility. Will the pipeline re-routing project proceed as planned since Farwest Steel is closed at this point?*

The bypass project described in the Engineering Report to reroute stormwater from Farwest Steel and Area 300 of the Facility has been constructed by the Port of Vancouver USA and is operational. As a result, the stormwater from Farwest Steel and Area 300 commingles with other stormwater after the Terminal 4 pond outlet. All of the commingled stormwater is then conveyed to the Terminal 4 outfall.

6. Anti-degradation Policy

> *Tier II is used to ensure that receiving waters of a higher quality than the criteria assigned in the standards are not degraded unless such lowering of water quality is necessary and in the overriding public interest. Tier II applies only to new or expanded sources of pollution from specific types of activities directly regulated by Ecology (e.g., NPDES, 401, 404, Forest Practices). Any new or expanding dischargers that would cause a measurable degradation of water quality:*
>
> *a. Must go through a technology review to identify and apply any feasible alternatives to that degradation.*
> *b. Must show that overriding public benefits would occur from allowing the lowering of water quality.*

> *A tier II analysis should be included in the NPDES Engineering Report. For reference please see WAC 173-201A-320 and Ecology guidance: (http://fortres.wa.gov/ecy/publications/SummaryPages/1110073.html) for more information.*

The Applicant is currently completing an analysis to demonstrate that discharges from the proposed Facility will not result in a measurable change in water quality outside the source area after allowing for mixing consistent with WAC 173-201A-400(7). The analysis will be completed in accordance with WAC 173-201A-320. The Applicant will complete the study and will submit the results to EFSEC at that time.

7. Area 200 Miscellaneous Part/Equipment Wash (Subsection 8.3.1)

> *This section describes wastewater sources in Area 200 including rail car and part/equipment washing, rainwater either dripping from the rail cars or blown in from the side, and accidental release of oil or fire retardant during oil transfers or system maintenance. Wash water will be collected and conveyed to the containment tanks for hauling off site by trucks to an approved facility for recycling or disposal. Wastewater collected at collection/containment trenches will be pumped to the unloading facility containment tanks and hauled off site by truck to a licensed and approved disposal facility. Please provide wastewater characterization, the treatment process employed and the ultimate point(s) for all wastewater generated at Area 200.*

The Applicant assumes that the reviewer means "ultimate point(s) of discharge for all waste waters generated in Area 200." Wastewater sources within the rail unloading building will be comingled, collected, and hauled off as discussed above. Collection of each stream is from the rail drip pans and floor drains within the rail unloading facility. Detailed characterization is only available for the steam condensate blowdown and is provided in the attached DMS-Nalco report. The remaining contributing streams are summarized with the components and expectations of those waste streams.

- Steam Condensate Blowdown. A full characterization of the steam condensate was developed by DMS-Nalco and is included in their attached report.
- Drips/leaks from railcars: Oily water with brake dust
- Windblown rain: Rainwater
- Railcar exterior washdown: Oily water, brake dust, suspended solids (dust), cleaner (Simple Green or similar)

- Parts wash: Oily water, cleaner (Simple Green or similar)
- Facility washdown: suspended solids (dust)

All of these sources of wastewater collected at the unloading facility will be pumped to the Area 200 containment tanks located at the Admin/Support Buildings and hauled off. It is anticipated that this haul off could occur daily depending upon actual wastewater production volumes.

There will be no on-site treatment for wastewaters collected at the unloading facility. Wastewaters during normal operations will be hauled by Bravo Environmental (or similar properly licensed industrial wastewater hauler) to PPV Inc. (or similar) for treatment, recycling, and discharge. PPV Inc. was preliminarily selected due to their treatment capabilities. Wastewaters from the Facility will be deposited upon arrival into a settling basin in the facility where the contents will be tested in their in-house lab to determine appropriate treatment. Following testing, the contents of the wastewater will most likely pass through advanced oil-water separator, settling basins, and possibly filtration prior to discharge. PPV Inc. developed a treatability plan (attached for your reference) confirming their ability to treat the range of wastewaters being hauled off from the Facility.

8. Area 600 Boiler Effluent (Subsection 8.3.2)

> *The boiler effluent discharges listed includes condensate discharge of 12,425 gpd to haul off. Please include characterization of the condensate and identify the receiving facility, treatment process employed and the ultimate disposal point of the wastewater. West Boiler (Subsection 17.2) states process wastewater including condensate blowdown and cooling water will be treated on site and discharged to sanitary sewer. Please specify how the condensate will be disposed of (offsite disposal or to the sanitary sewer).* ***Please ensure that the treatment process employed for each wastewater stream is consistent throughout the engineering report.***

During peak operating normal conditions (maximum water use and maximum sewer discharge), the boiler units operate with a 4 percent boiler blowdown rate and a 25 percent condensate loss. Under the maximum operating scenario with two boilers operating, the steam production is estimated to be 83,830 pounds per hour (pph) with a condensate return of 67,064 pph. The following chart indicates the resulting water balance for the boiler at these rates.

• Raw water (intake)	85,305 gpd
• Sanitary sewer discharge (boiler blowdown)	22,464 gpd
• Atmospheric loss	38,848 gpd
• Steam condensate blowdown (haul off)	7,952 gpd

The boiler blowdown, which includes condensate return, is treated for pH as needed and by a non-contact tube and shell heat exchanger to reduce temperature; then the blowdown is combined with the Reverse Osmosis (RO) wastewater and miscellaneous maintenance drain water within the boiler plant and pumped to the gravity sewer installed on site at Area 200, passes through an oil-water separator, and is discharged to the sanitary sewer.

Steam condensate blowdown is generated during the unloading of tank cars in Area 200. Within the rail unloading building as part of operating this system, during the connection and disconnection of the railcar steam coils, the operator opens the steam line valves and discharges steam directly to the rail drip pans. This procedure is an operational necessity, as it purges the lines of debris. This results in the discharge of steam condensate blowdown. The steam condensate blowdown is collected in the Area 200 drip pans, which discharge to the Area 200 containment tanks along with other wastewater streams as described in item 7 above. The contents of these containment tanks will be hauled offsite.

In accordance with the SPCC regulations in 40 CFR 112.8, the rail unloading facility includes a containment system designed to capture and store a minimum of 110 percent of the contents of a rail car. This system has been oversized so that all operational wastewaters generated within the rail unloading building can be collected and stored for haul off if necessary. These wastewaters include steam condensate blowdown and wastewaters resulting from the miscellaneous equipment wash (includes occasional railcar exterior washing).

The Applicant has not signed a contract for services that include hauling off and disposing of or recycling the contents of the Area 200 containment tanks. Vendors will be selected who are licensed appropriately by the Department of Transportation to haul non-hazardous waste liquids and whose receiving facilities are specially designed, permitted, and operated to provide pretreatment for non-hazardous industrial wastes. Examples would include Bravo Environmental and PPV, Inc.

A detailed characterization of the wastewaters were provided to PPV, Inc. and a description of the proposed treatment system was prepared by their in-house staff. Based upon the characterization and range of wastes expected, PPV confirmed that they can receive the wastes expected from the Facility.

9. Fire Pump Cooling Water (Subsection 8.3.4)

> *States that fire pump cooling water from different Areas 200, 300, and 400 is being discharged to the containment tank, sanitary sewer and stormwater system. However there is no information regarding the characteristics of fire pump cooling water. Please provide the information for review.*

Table 1 above provides a characterization for the non-contact fire pump cooling water. Please note that, as stated in the Engineering Report, during normal operations the fire pumps are operated for only 30 minutes once each week.

10. C.2 Process Schematic for Wastewater Discharges

> *The diagram shows there is a boiler building in Area 300 and two product tanks are heated with steam. However it does not match with the wastewater collection/treatment system for Area 300 as provided in the engineering report. Please revise the diagram as appropriate.*

C.2 Process Schematic was provided in the Engineering Report as an attachment of the state wastewater discharge permit, which was included in the original 2013 Application for Site Certification. We have attached the most recent process schematic for wastewater discharges.

Please contact me at 206/431-2373 or at irina.makarow@abam.com, if you have any questions about this submittal. We look forward to further coordination with you, your staff, and EFSEC's consultants.

Sincerely,

Irina Makarow
Senior Environmental Project Manager

IM:DRS:nb
Attachments
Wastewater Characterization Report
PPV Inc. Treatability Plan
Schematics for Wastewater Discharges Process

cc w/attach: Kelly Flint, Savage Companies
Jay Derr, Van Ness Feldman

Water Treatment System Review

Report

23 May 2016

BergerABAM

Port of Vancouver/Vancouver, WA

Mr. Dan Shafar

DMS Main Office:
358 US Route One
Falmouth, ME 04105

Charles Bailey
(+1 207) 274-9712
cwbailey@nalco.com

Kenn Cygan
(+1 207) 8318115
kcygan@nalco.com

Stan Jenkins
(+44) 0-7736-354-111
sjenkins1x@nalco.com

April Yi
(+1 513) 225-3046
ayyyi@nalco.com

TABLE OF CONTENTS

Confidentiality Statement 2
Section I: Executive Summary 3
Results Summary 3
Water Characteristics 4
Initial Design with Reverse Osmosis/Sodium Zeolite Process 4
Section II: Abstract 4
Key Goals 4
Section III: Project Description 5
Operating Criteria 5
Cleaver-Brooks Chemistry Specifications 5
Water Sources 6
Methodology 10
Section IV: Evaluation 11
Modeling Observations 11
Water Inventory 11
Scenario Description 12
Scenario Evaluation 13
SCN_002 PROPOSED SCENARIO 13
Section V: Conclusions 15
Proposed Operations 15
Results Summary 15
Appendix A: City Water Analysis 16
Appendix B: Water Balance Diagrams 18
Appendix C: Analytical Detection Limits 19
Appendix D: Chemistry 20

©2016 Ecolab USA Inc. All Rights Reserved

CONFIDENTIALITY STATEMENT

This report contains information relating to the operations at the proposed west boiler house for the Port of Vancouver, Vancouver, WA. This information is confidential to each party, and as such this report should not be shared without the express written consent of all the parties involved.

Trade Marks

Ecolab, Nalco Water, Data Mobility Systems and the logos are trademarks of Ecolab USA Inc.

All other trademarks are the property of their respective owners.

CONFIDENTIALITY NOTICE: This document is intended solely for the use of the individual or entity to whom they are addressed and may contain confidential and privileged information protected by law. If you received this document in error, any review, use, dissemination, distribution, or copying of the document is strictly prohibited.

DISCLAIMER: Actual values may be different pending actual conditions. We make no warranty of any kind regarding the accuracy or sufficiency of the information contained herein due to various assumptions including proposed plant configuration and anticipated operating requirements as provided.

©2016 Ecolab USA Inc. All Rights Reserved

SECTION I: EXECUTIVE SUMMARY

Tesoro and Savage have formed a joint venture to build and operate the Vancouver Energy terminal. The proposed facility will receive and ship crude oil that originates in the midcontinent of North America and arrives at the Port of Vancouver USA by rail. The crude oil will be temporarily and safely stored in secure tanks, then transferred to customers' vessels to be shipped to West Coast oil refineries, and converted into transportation fuels and other products for U.S. consumption.

BergerABAM is providing consulting services to Tesoro and Savage on the feasibility of constructing this facility. As part of this project, BergerABAM need to obtain an environmental permit from either the state or city authorities, but require more detailed information on the expected discharge characteristics from the new facility.

Nalco has been requested to supply expertise to support the development of the project. Nalco has been requested to develop the waste water characteristics for a scenario based the following specific operating criteria.

1. **Scenarios:** The following scenario was evaluated.
    a. Average water flows based on two Cleaver Brook boilers running (SCN_000)
    b. City water feeding the boilers treated with a reverse osmosis (RO) unit followed by an off-site regenerated sodium zeolite softener (SCN_002)

RESULTS SUMMARY

- The design & operating parameters result in boiler feed water that meets all the Cleaver Brooks boiler water chemistry specifications.

- The design & operating parameters result in waste water that meets all the chemistry limits for waste water discharge.

©2016 Ecolab USA Inc. All Rights Reserved

WATER CHARACTERISTICS

INITIAL DESIGN WITH REVERSE OSMOSIS/SODIUM ZEOLITE PROCESS

1. Water flow characteristics
    a. Boiler blowdown details can be seen in Table 2 and chemistry Appendix C
        i. Cleaver Brooks specifications are met
        ii. Sulfite levels are present in the blowdown
        iii. Phosphate is present in the blowdown from city water PO_4
    b. Total waste water details can be seen in Table 3 and Table 4 and chemistry Appendix C

SECTION II: ABSTRACT

This engineering study included gathering of information on the conceptual design and extensive use of a proprietary modeling software program that replicates specified expected operating conditions of the facility. This involved computer based holistic modeling of the plant water and process systems.

KEY GOALS

1. Establish reliable water balance for the conceptual design and specified operating parameters
    a. Hydraulic flows
    b. Ionic chemistry
2. Determine the water characteristics of the following flows
    a. Boiler blowdown
    b. Total waste water
    c. Boiler feedwater
    d. Boiler cycle make up
    e. Steam condensate

©2016 Ecolab USA Inc. All Rights Reserved

SECTION III: PROJECT DESCRIPTION

OPERATING CRITERIA

Port of Vancouver, WA		
Scenario_000		
Operational Parameters		
Number of Boilers	3	
Rated Boiler Capacity each	51,750	pph
Boiler Operating	2	
Boilers on Standby	1	
Operating Pressure	125	psig
Steam Production Total	83,830	pph
Condensate Return	67,064	pph
Blowdown %	4.0%	

CLEAVER-BROOKS CHEMISTRY SPECIFICATIONS

TOTAL HARDNESS	1 PPM MAXIMUM
TOTAL ALKALINITY	600 PPM MAXIMUM
TOTAL SILICA	150 PPM MAXIMUM
IRON CONTENT	0.1 PPM MAXIMUM
PH	8.5 – 10.5
TOTAL DISSOLVED SOLIDS	2,200 TO 2,500 PPM
OXYGEN CONTENT	0 PPM
CARBON DIOXIDE	0 PPM

(SOURCE: CLEAVER-BROOKS, INC.)

©2016 Ecolab USA Inc. All Rights Reserved

WATER SOURCES

The water chemistry of the city water source (during the sampling week February 11, 2016) can be classified as slightly hard water with moderate alkalinity concentration. The hardness is primarily temporary hardness which implies lime softening can be effective in reducing hardness, alkalinity, TDS and silica as well. The reactive silica level is very high and is of concern in managing the boiler water chemistry within the OEM's water specifications.

Table 1 summarizes these critical chemistry parameters that drive water processes required to manage the water consumption and waste water discharge volume.

Table 1 City Water Chemistry

KEY WATER CONSTITUENTS	City Water
ALL UNITS IN mg/L (unless otherwise specified)	SCN_000
Ca	33.0000
K	3.3000
Li	ND
Mg	9.7000
Na	6.4000
Sr	0.1220
Zn	0.0200
Cl	6.9000
HCO3	131.4833
NO3	15.0000
PO4	0.3679
SO4	10.0000
pH su	7.7000
SiO2	48.0000

City water chemistry based on sample taken of Vancouver city water at the Nalco manufacturing plant in Vancouver, WA. The sample was analyzed through ICP for metals and IC for anions. Alkalinity was tested with auto-titration and pH with standard lab bench pH meter.

ICP: Inductively Coupled Plasma Spectroscopy

IC: Ion chromatography

See Appendix C for detection limits

©2016 Ecolab USA Inc. All Rights Reserved

Table 2: Boiler Blowdown Chemistry

KEY WATER CONSTITUENTS	Boiler BD
ALL UNITS IN mg/L (unless otherwise specified)	SCN_002
Ca	ND
K	1.0205
Mg	ND
Na	99.2036
Zn	0.0062
Cl	2.1339
HCO3	17.7951
NO3	4.6389
OH	NC
PO4	0.1138
SO3	112.5702
SO4	3.8133
Conductivity µS/cm	339.8661
pH su	10.3037
SiO2	15.3267
TDS	271.8929
Temperature °F	95.0000

Note: Elements and compounds that are not listed were either not tested (NT) or below analytical procedure detection limit (ND). There are also other values that are not applicable (NA) to this process or are calculated values that cannot be calculated (NC) on this water chemistry. A complete list can be found in Appendix D

©2016 Ecolab USA Inc. All Rights Reserved

Table 4 Drain Sump Chemistry & Specification

KEY WATER CONSTITUENTS	Final Waste
ALL UNITS IN mg/L (unless otherwise specified)	SCN_002
Ag	ND
As	ND
Ca	100.8204
Cd	ND
Cr	ND
Cu	ND
Hg	ND
K	10.1931
Mg	29.6351
Mo	ND
Na	32.0165
Ni	ND
Pb	ND
Se	ND
Tl	ND
Zn	0.0618
Cl	21.3128
CN	ND
HCO3	400.3494
NO3	47.1287
OH	ND
PO4	1.1365
SO3	12.2498
SO4	37.9369
BOD5	6.4283
Conductivity µS/cm	869.5330
FOG	7.7139
pH su	8.4188
SiO2	148.3151
TDS	695.6264
Temperature °F	75.7740

All values in mg/L unless other wise specified

©2016 Ecolab USA Inc. All Rights Reserved

Table 4 Drain Sump Chemistry & City of Vancouver Discharge Limit

KEY WATER CONSTITUENTS	City of Vancouver Discharge Limit	SCN_002
ALL UNITS IN mg/L (unless otherwise specified)	Final Waste Water Discharge	Final Waste Water Discharge
Ag	1.130000	ND
As	0.220000	ND
Cd	0.140000	ND
Cr	7.220000	ND
Cu	3.670000	ND
Hg	0.008000	ND
Mo	0.420000	ND
Ni	0.900000	ND
Pb	0.440000	ND
Se	0.310000	ND
Tl	0.530000	ND
Zn	1.640000	0.061776
CN	0.470000	NT
BOD5	500.000000	6.428280
FOG	50.000000	7.713936
pH su	10.000000	8.418850
Temperature °F	104.000000	75.774029

<u>All values meet waste specification base.</u>

Chromium value is for total Cr (Cr^{+3} and Cr^{+6}).
A nominal amount of BOD and FOG was added to the sanitary waste flow. Also additional amount to FOG was added to the condensate that is delivered to the floor drains.

©2016 Ecolab USA Inc. All Rights Reserved

METHODOLOGY

DMS was supplied with the original design diagrams, expected operating parameters and water chemistry analyses from Nalco. DMS then developed a line diagram model of the water balance using Visio and the proprietary DMS-Water™ software system to replicate the proposed operating conditions of the facility.

DMS evaluated the proposed plant configurations regarding water chemistry based on operations feedback and our intimate knowledge of practical industrial water treatment as it pertains to steam plant process operations. The results of these studies were captured in this report.

The scope of the work can be found in Appendix A.

Disclaimer:

The enclosed information is based on an average chemistry for the city water source. DMS-Water™ modeling was matched to a snapshot of chemistry data that indicates that our modeling sufficiently represents the water balance and system. Conditions such as incursion of air borne debris into the cooling tower and plant operational changes can cause actual conditions to differ from our modeling. While actual chemistry conditions and chemical costs most likely will differ from our modeling, the implied improvements and actual costs should be reflected with actual operations.

©2016 Ecolab USA Inc. All Rights Reserved

SECTION IV: EVALUATION

MODELING OBSERVATIONS

- Boiler blowdown chemistry complies with both ASME and Cleaver-Brooks silica, alkalinity and pH specifications
- Waste water chemistry and flow complies with expected discharge permits.

WATER INVENTORY

Table 4 Incoming Water Inventory

Water In (gpm)	SCN_002
City Water	
• City Water to Plant	48.1
Subtotal	48.1
Total Water In	48.1

Table 5 Outgoing Water Inventory

Water Out (gpm)	SCN_002
Evaporation	
• Misc. condensate loss 1	9.1
• Misc. condensate loss 2	17.9
Subtotal	27.0
Final Discharge	
• Final Discharge	15.6
Subtotal	15.6
Tank-Waste Manual	
• Rail car condensate losses	5.5
Subtotal	5.5
Total Water Out	48.1

©2016 Ecolab USA Inc. All Rights Reserved

SCENARIO DESCRIPTION

DMS investigated five (5) alternative designs to address the goals of this engineering study, and following discussion with BergerABAM chose SCN_002 as the design that best meets the objectives of this project.

1. Determine the water characteristics
    a. Boiler blowdown
    b. Total waste water
    c. Boiler feedwater
    d. Boiler cycle makeup
    e. Steam condensate
2. Meet the water specifications for boiler water and waste water discharge.

.

©2016 Ecolab USA Inc. All Rights Reserved

SCENARIO EVALUATION

SCN_002 PROPOSED SCENARIO

This is the Base Case of the new facility for the proposed west boiler house. It utilizes the design and operating conditions agreed between Nalco and BergerABAM.

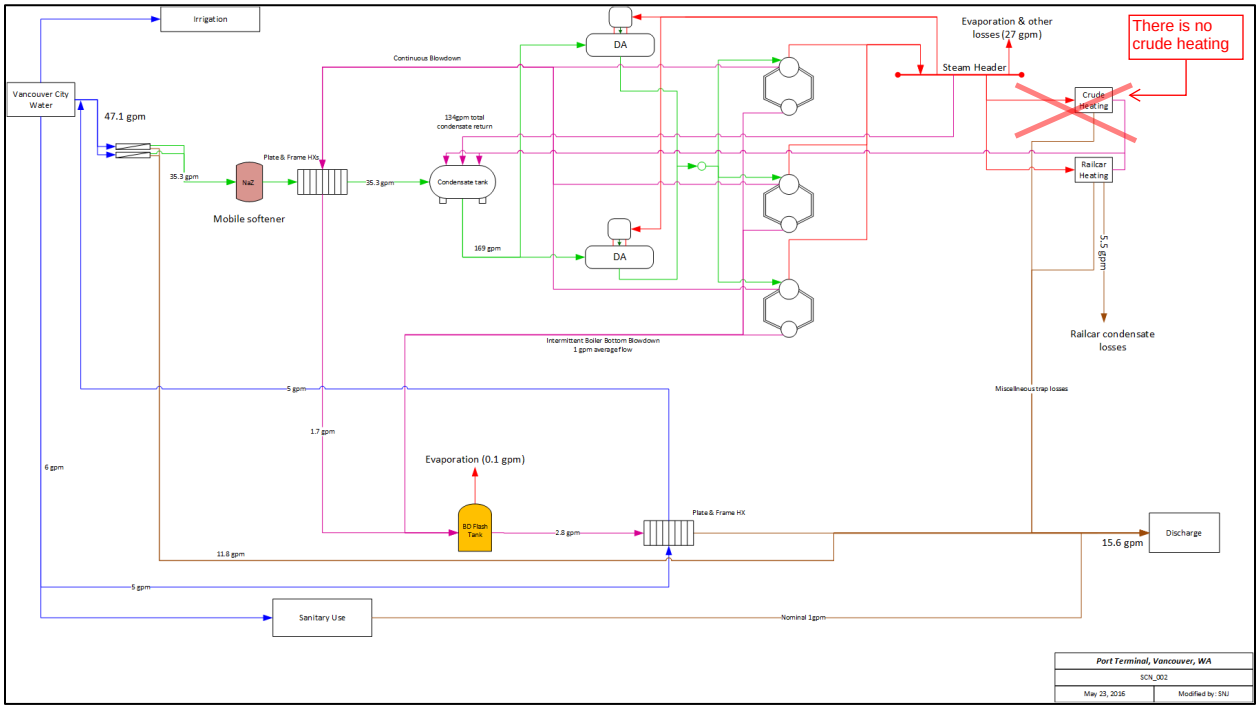

Summary: The incoming city water is treated with a reverse osmosis unit followed by an off-site regenerated (mobile) sodium zeolite softener. Blowdown water from the boilers is cooled by two plate and frame heat exchangers, both using water that will ultimately feed the boilers. The first heat exchanger cools the blowdown with softened water that feeds the deaerator. The second heat exchanger uses fresh city water prior to feeding the reverse osmosis unit.

Results: This case established that the boiler chemistry meets both ASME and Cleaver-Brooks boiler water chemistry specification for silica, pH and other ion concentrations. The boiler blowdown chemistry contains sulfite and phosphate. The sulfite is the results of boiler water oxygen scavenger use and the phosphate is the results of phosphate in the city water make up.

©2016 Ecolab USA Inc. All Rights Reserved

Table 6 SCN_002 Boiler Blowdown Chemistry

KEY WATER CONSTITUENTS	SCN_002	
ALL UNITS IN mg/L (unless otherwise specified)	Boiler BD	Boiler BD Specification
Ca	0.0000	1.0
K	1.0205	
Mg	0.0000	
Na	99.2036	
Zn	0.0062	
Cl	2.1339	
HCO3	17.7951	
NO3	4.6389	
OH	0.0000	
PO4	0.1138	
SO3	112.5702	
SO4	3.8133	
Conductivity µS/cm	339.8661	
pH su	10.3037	8.5-10.5
SiO2	15.3267	150
TDS	271.8929	2,200
Temperature °F	95.0000	

©2016 Ecolab USA Inc. All Rights Reserved

SECTION V: CONCLUSIONS

PROPOSED OPERATIONS

Scenario: The following scenario was evaluated.

a. Average water flows based on two Cleaver Brook boilers running
b. City water feeding the boilers treated with a reverse osmosis (RO) unit followed by an off-site regenerated sodium zeolite softener.

RESULTS SUMMARY

- The design & operating parameters result in boiler feed water that meets all the Cleaver Brooks boiler water chemistry specifications.

- The design & operating parameters result in waste water that meets all the chemistry limits for waste water discharge.

- Detailed chemistry for all key water flows can be found in Appendix C.

©2016 Ecolab USA Inc. All Rights Reserved

APPENDIX A: CITY WATER ANALYSIS

Customer Analytical Services
1601 West Diehl Road Naperville IL60563-1198
Phone: 630-305-1000 Fax: 630-305-2921 Email: customeranalyticalservices@nalco.com

NALCO
An Ecolab Company

Final - Report Number: 1664169
VANCOUVER PLANT - 8510 FRUIT VALLEY RD - VANCOUVER - WA - USA
Representative: PETER KANDA

Sample Number	NW190302
Date Sampled	11-Feb-2016 14:00
Date Received	12-Feb-2016
Date Completed	17-Feb-2016
Date Authorized	17-Feb-2016

Water Analysis

This sample was analyzed as received, the results being as follows.

Sampling point: Vancouver City Water

Water

Acid Extractable Metals **Test Method: CW14024**	**Filtered**	**Total**
Aluminum (Al)	<0.03 mg/L	<0.03 mg/L
Barium (Ba)	0.009 mg/L	0.009 mg/L
Boron (B)	<0.02 mg/L	<0.02 mg/L
Cadmium (Cd)	<0.005 mg/L	<0.005 mg/L
Calcium (Ca)	33 mg/L	33 mg/L
Calcium (CaCO3)	82 mg/L	83 mg/L
Chromium (Cr)	<0.015 mg/L	<0.015 mg/L
Copper (Cu)	<0.03 mg/L	0.03 mg/L
Iron (Fe)	<0.02 mg/L	<0.02 mg/L
Lead (Pb)	<0.10 mg/L	<0.10 mg/L
Lithium (Li)	<0.005 mg/L	<0.005 mg/L
Magnesium (Mg)	9.7 mg/L	9.7 mg/L
Magnesium (CaCO3)	40 mg/L	40 mg/L
Manganese (Mn)	<0.005 mg/L	<0.005 mg/L
Molybdenum (Mo)	<0.04 mg/L	<0.04 mg/L
Nickel (Ni)	<0.01 mg/L	<0.01 mg/L
Phosphorus (P)	0.12 mg/L	0.12 mg/L
Potassium (K)	3.3 mg/L	3.3 mg/L
Silicon (Si)	22 mg/L	23 mg/L
Silica (SiO2)	48 mg/L	48 mg/L
Sodium (Na)	6.4 mg/L	6.4 mg/L
Sodium (CaCO3)	14 mg/L	14 mg/L
Strontium (Sr)	0.122 mg/L	0.123 mg/L
Vanadium (V)	<0.01 mg/L	<0.01 mg/L
Zinc (Zn)	0.02 mg/L	0.02 mg/L
Total Hardness (CaCO3)	120 mg/L	120 mg/L

COMPANY WITH QUALITY SYSTEM CERTIFIED BY DNV
= ISO 9001:2008 =

Authorized by Kimberly Jackson
Principal Chemist

Page 1 of 2

©2016 Ecolab USA Inc. All Rights Reserved

Customer Analytical Services
1601 West Diehl Road Naperville IL60563-1198
Phone: 630-305-1000 Fax: 630-305-2821 Email: customeranalyticalservices@nalco.com

NALCO
An Ecolab Company

Final Report Number: 1664169
VANCOUVER PLANT - 8510 FRUIT VALLEY RD - VANCOUVER - WA - USA
Representative: PETER KANDA

Sample Number	NW100302
Date Sampled	11-Feb-2016 14:00
Date Received	12-Feb-2016
Date Completed	17-Feb-2016
Date Authorized	17-Feb-2016

Water Analysis

This sample was analyzed as received, the results being as follows:

Sampling point: Vancouver City Water

Anions **Test Method: CW15000**	**Filtered**
Chloride (Cl)	6.9 mg/L
Nitrite (NO2)	<0.20 mg/L
Bromide (Br)	<0.20 mg/L
Nitrate (NO3)	15 mg/L
Sulfate (SO4)	10 mg/L
Chloride (CaCO3)	9.7 mg/L
Nitrate (CaCO3)	12 mg/L
Sulfate (CaCO3)	11 mg/L

Alkalinity **Test Method: CW11059**	**Total**
Total Alkalinity (CaCO3)	120 mg/L
Phenolphthalein Alkalinity (CaCO3)	<10 mg/L
Bicarbonate (CaCO3)	120 mg/L

Other Analytes	**Test Method**	**Total**
Conductivity at 25°C	CW11063	290 µS/cm
pH @ 25°C	CW11059	7.7 pH Units

COMPANY WITH
QUALITY SYSTEM
CERTIFIED BY DNV
= ISO 9001:2008 =

Authorized by Kimberly Jackson
Principal Chemist

Page 2 of 2

©2016 Ecolab USA Inc. All Rights Reserved

APPENDIX B: WATER BALANCE DIAGRAMS

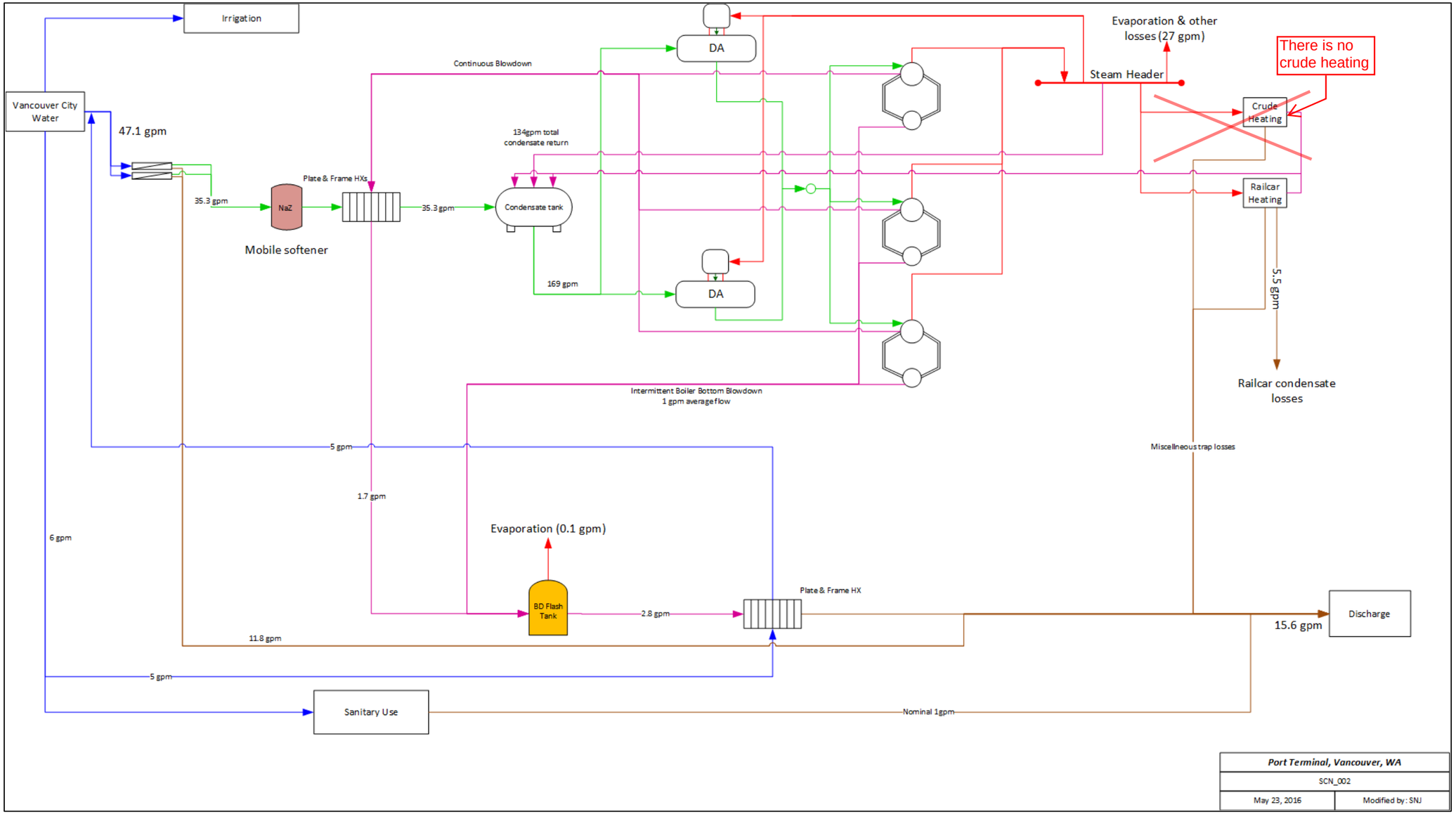

©2016 Ecolab USA Inc. All Rights Reserved

APPENDIX C: ANALYTICAL DETECTION LIMITS

Test Code Provides the following analyses(mg/l) for Total and Soluble cations and anions:
(Cations by ICP; Anions by IC)
(Alkalinity values by auto-titration)

	Reportable Limits mg/l *		Reportable Limits mg/l *
Aluminum (Al)	0.03	Chloride (Cl)	0.1
Barium (Ba)	0.005	Nitrite (NO2)	0.2
Boron (B)		Bromide (Br)	0.2
Cadmium (Cd)	0.005	Nitrate (NO3)	0.2
Calcium (Ca)	0.05	Sulfate (SO4)	0.2
Calcium (CaCO3)		Chloride (CaCO3)	
Chromium (Cr)	0.015	Nitrate (CaCO3)	
Copper (Cu)	0.03	Sulfate (CaCO3)	
Iron (Fe)	0.02		
Lead (Pb)	0.11	Total Alkalinity (CaCO3)	10
Lithium (Li)	0.005	Phenolphthalein Alkalinity (CaCO3)	10
Magnesium (Mg)	0.15	Bicarbonate (CaCO3)	
Magnesium (CaCO3)		Carbonate (CaCO3)	
Manganese (Mn)	0.005		
Molybdenum (Mo)	0.04	Inorganic Phosphate (PO4)	2
Nickel (Ni)	0.01	Ortho Phosphate (PO4)	2
Phosphorus (P)	0.03	Organic Phosphate (PO4)	2
Potassium (K)	0.12	Polyphosphate (PO4)	2
Silicon (Si)		Total Phosphate (PO4)	2
Silica (SiO2)			
Sodium (Na)		Conductivity at 25°C - meter	1
Sodium (CaCO3)		pH @ 25°C - meter	1
Strontium (Sr)	0.005		
Vanadium (V)	0.01		
Zinc (Zn)	0.01		

* Dependent on total dissolved solids concentration, and test method.

* Dependent on total dissolved solids concentration and test method.

©2016 Ecolab USA Inc. All Rights Reserved

APPENDIX D: CHEMISTRY

Scenario: Vancouver Terminal SCN_002
Flow Name: City Water
Flow Rate: 48.0563 gpm

Cation			
Symbol	**Name**	**mg/L as $CaCO_3$**	**mg/L as Ion**
Ag	Silver	ND	ND
Al	Aluminum	ND	ND
As	Arsenic	ND	ND
Au	Gold	ND	ND
B	Boron	ND	ND
Ba	Barium	0.0066	0.0090
Be	Beryllium	ND	ND
Ca	Calcium	82.4110	33.0000
Cd	Cadmium	ND	ND
Co	Cobalt	ND	ND
Cr	Chromium	ND	ND
Cu	Copper	ND	ND
Cu I	Copper (cuprous)	ND	ND
Fe	Iron	ND	ND
Fe II	Iron (ferrous)	ND	ND
H+	Hydronium	ND	ND
Hg	Mercury	ND	ND
K	Potassium	4.2238	3.3000
Li	Lithium	ND	ND
Mg	Magnesium	39.9442	9.7000
Mn	Manganese (Manganous)	ND	ND
Mo	Molybdenum	ND	ND
Na	Sodium	13.9313	6.4000
NH4	Ammonia	NT	NT
Ni	Nickel	ND	ND
Pb	Lead	ND	ND
S	Sulfur	NA	NA
Sb	Antimony	ND	ND
Se	Selenium	ND	ND
Si	Silicon	ND	ND
Sm	Samarium	ND	ND
Sn	Tin	ND	ND
Sr	Strontium	0.1394	0.1220
Ti	Titanium	ND	ND
Tl	Thallium (thallic)	ND	ND
U	Uranium (valence 4)	ND	ND
V	Vanadium	ND	ND
Zn	Zinc	0.0275	0.0200

©2016 Ecolab USA Inc. All Rights Reserved

Scenario: Vancouver Terminal SCN_002
Flow Name: City Water
Flow Rate: 48.0563 gpm

Anion			
Symbol	**Name**	**mg/L as $CaCO_3$**	**mg/L as Ion**
B4O7	Borate	ND	ND
Br	Bromide	ND	ND
Cl	Chloride	9.7397	6.9000
CN	Cyanide	ND	ND
CO3	Carbonate	ND	ND
F	Fluoride	NT	NT
HCO3	Bicarbonate	107.8371	131.4834
I	Iodide	ND	ND
MoO4	Molybdate	ND	ND
NO2	Nitrite	ND	ND
NO3	Nitrate	12.1063	15.0000
OH	Hydrate	ND	ND
P	Phosphorous (Valence 3)	ND	ND
PO4	Phosphate (as PO4)	0.5816	0.3679
SiO3	Silicate	ND	ND
SO3	Sulfite	ND	ND
SO4	Sulfate	10.4188	10.0000

©2016 Ecolab USA Inc. All Rights Reserved

Scenario: Vancouver Terminal SCN_002
Flow Name: City Water
Flow Rate: 48.0563 gpm

Other			
Symbol	**Name**	**mg/L as $CaCO_3$**	**mg/L as Ion**
$/1000 gal	Dollar per 1000 gallon	NT	NT
BOD5	5 Day Biochemical Oxygen Demand	NT	NT
CO2	Carbon Dioxide	NT	NT
CO2-gas	Carbon Dioxide Gas (Undissolved)	NT	NT
COD	Chemical Oxygen Demand	NT	NT
Conductivity	Conductivity	270.3779	270.3779
Enthalpy	Enthalpy	NC	NC
FOG	Free Oil and Grease	NT	NT
H2S	Hydrogen Sulfide	NT	NT
Ionic Strength	Ionic Strength	0.0042	0.0042
Langlier Stability Index	Langlier Stability Index	-0.3479	-0.3479
M Alkalinity	Total Alkalinity	107.8371	107.8371
NH3	Ammonia	NC	NC
O2	Oxygen	NT	NT
OCl	Hypoclorite	NT	NT
P Alkalinity	P Alkalinity	ND	ND
pH	pH	7.7000	7.7000
pHeq	pHeq	7.5180	7.5180
pHs	pHs	8.0479	8.0479
psia	Pounds per Square Inch Absolute	14.6960	14.6960
Puckorius Scale Index	Puckorius Scale Index	8.5778	8.5778
Ryznar Index	Ryznar Index	8.3958	8.3958
SAR	Saline Absorption Ratio	0.2511	0.2511
Screenings	Screenings	NA	NA
Silica Sol	Silica Sol	NA	NA
SiO2	Silica	39.9786	48.0000
SiO2-Colloidal	SiO2-Colloidal	0.8329	1.0000
Sulfur	Sulfur	NA	NA
TDS	Total Disolved Solids	216.3023	216.3023
TempF	Temperature Fahrenheit	70.0000	70.0000
TOC	Total Organic Carbon	NT	NT
Total Hardness	Total Hardness	122.3552	122.3552
TSS	Total Suspended Solids	NT	NT

©2016 Ecolab USA Inc. All Rights Reserved

Scenario: Vancouver Terminal SCN_002
Flow Name: Softened Water
Flow Rate: 35.2922 gpm

Cation			
Symbol	Name	mg/L as $CaCO_3$	mg/L as Ion
Ag	Silver	ND	ND
Al	Aluminum	ND	ND
As	Arsenic	ND	ND
Au	Gold	ND	ND
B	Boron	ND	ND
Ba	Barium	0.0001	0.0001
Be	Beryllium	0.0000	0.0000
Ca	Calcium	0.0102	0.0041
Cd	Cadmium	0.0000	0.0000
Co	Cobalt	0.0000	0.0000
Cr	Chromium	0.0000	0.0000
Cu	Copper	0.0000	0.0000
Cu I	Copper (cuprous)	0.0000	0.0000
Fe	Iron	0.0000	0.0000
Fe II	Iron (ferrous)	0.0000	0.0000
H+	Hydronium	0.0000	0.0000
Hg	Mercury	0.0000	0.0000
K	Potassium	0.0634	0.0495
Li	Lithium	0.0000	0.0000
Mg	Magnesium	0.0074	0.0018
Mn	Manganese (Manganous)	0.0000	0.0000
Mo	Molybdenum	0.0000	0.0000
Na	Sodium	2.0372	0.9359
NH4	Ammonia	0.0000	0.0000
Ni	Nickel	0.0000	0.0000
Pb	Lead	0.0000	0.0000
S	Sulfur	0.0000	0.0000
Sb	Antimony	0.0000	0.0000
Se	Selenium	0.0000	0.0000
Si	Silicon	0.0000	0.0000
Sm	Samarium	0.0000	0.0000
Sn	Tin	0.0000	0.0000
Sr	Strontium	0.0021	0.0018
Ti	Titanium	0.0000	0.0000
Tl	Thallium (thallic)	0.0000	0.0000
U	Uranium (valence 4)	0.0000	0.0000
V	Vanadium	0.0000	0.0000
Zn	Zinc	0.0004	0.0003

©2016 Ecolab USA Inc. All Rights Reserved

Scenario: Vancouver Terminal SCN_002
Flow Name: Softened Water
Flow Rate: 35.2922 gpm

Anion			
Symbol	**Name**	**mg/L as $CaCO_3$**	**mg/L as Ion**
B4O7	Borate	ND	ND
Br	Bromide	ND	ND
Cl	Chloride	0.1461	0.1035
CN	Cyanide	ND	ND
CO3	Carbonate	ND	ND
F	Fluoride	NT	NT
HCO3	Bicarbonate	1.5916	1.9406
I	Iodide	ND	ND
MoO4	Molybdate	ND	ND
NO2	Nitrite	ND	ND
NO3	Nitrate	0.1816	0.2250
OH	Hydrate	ND	ND
P	Phosphorous (Valence 3)	ND	ND
PO4	Phosphate (as PO4)	0.0087	0.0055
SiO3	Silicate	ND	ND
SO3	Sulfite	ND	ND
SO4	Sulfate	0.1927	0.1850

©2016 Ecolab USA Inc. All Rights Reserved

Scenario: Vancouver Terminal SCN_002
Flow Name: Softened Water
Flow Rate: 35.2922 gpm

Other			
Symbol	**Name**	**mg/L as $CaCO_3$**	**mg/L as Ion**
$/1000 gal	Dollar per 1000 gallon	0.0000	NC
BOD5	5 Day Biochemical Oxygen Demand	NT	NT
CO2	Carbon Dioxide	0.4103	0.3608
CO2-gas	Carbon Dioxide Gas (Undissolved)	0.8038	0.7069
COD	Chemical Oxygen Demand	NT	NT
Conductivity	Conductivity	4.3164	4.3164
Enthalpy	Enthalpy	NC	NC
FOG	Free Oil and Grease	ND	ND
H2S	Hydrogen Sulfide	NT	NT
Ionic Strength	Ionic Strength	0.0000	0.0000
Langlier Stability Index	Langlier Stability Index	-6.7348	-6.7348
M Alkalinity	Total Alkalinity	1.5916	1.5916
NH3	Ammonia	NT	NT
O2	Oxygen	NT	NT
OCl	Hypoclorite	NT	NT
P Alkalinity	P Alkalinity	ND	ND
pH	pH	6.8153	6.8153
pHeq	pHeq	4.8357	4.8357
pHs	pHs	13.5502	13.5502
psia	Pounds per Square Inch Absolute	44.6959	44.6959
Puckorius Scale Index	Puckorius Scale Index	22.2646	22.2646
Ryznar Index	Ryznar Index	20.2850	20.2850
SAR	Saline Absorption Ratio	3.0620	3.0620
Screenings	Screenings	NA	NA
Silica Sol	Silica Sol	NA	NA
SiO2	Silica	0.5997	0.7200
SiO2-Colloidal	SiO2-Colloidal	0.0125	0.0150
Sulfur	Sulfur	NA	NA
TDS	Total Disolved Solids	3.4531	3.4531
TempF	Temperature Fahrenheit	75.2618	75.2618
TOC	Total Organic Carbon	NT	NT
Total Hardness	Total Hardness	0.0176	0.0176
TSS	Total Suspended Solids	2.8509	2.8509

©2016 Ecolab USA Inc. All Rights Reserved

Scenario: Vancouver Terminal SCN_002
Flow Name: Condensate return
Flow Rate: 133.926 gpm

Cation			
Symbol	**Name**	**mg/L as $CaCO_3$**	**mg/L as Ion**
Ag	Silver	ND	ND
Al	Aluminum	ND	ND
As	Arsenic	ND	ND
Au	Gold	ND	ND
B	Boron	ND	ND
Ba	Barium	ND	ND
Be	Beryllium	ND	ND
Ca	Calcium	ND	ND
Cd	Cadmium	ND	ND
Co	Cobalt	ND	ND
Cr	Chromium	ND	ND
Cu	Copper	ND	ND
Cu I	Copper (cuprous)	ND	ND
Fe	Iron	ND	ND
Fe II	Iron (ferrous)	ND	ND
H+	Hydronium	ND	ND
Hg	Mercury	ND	ND
K	Potassium	0.0008	0.0006
Li	Lithium	ND	ND
Mg	Magnesium	ND	ND
Mn	Manganese (Manganous)	ND	ND
Mo	Molybdenum	ND	ND
Na	Sodium	0.1260	0.0579
NH4	Ammonia	ND	ND
Ni	Nickel	ND	ND
Pb	Lead	ND	ND
S	Sulfur	ND	ND
Sb	Antimony	ND	ND
Se	Selenium	ND	ND
Si	Silicon	ND	ND
Sm	Samarium	ND	ND
Sn	Tin	ND	ND
Sr	Strontium	ND	ND
Ti	Titanium	ND	ND
Tl	Thallium (thallic)	ND	ND
U	Uranium (valence 4)	ND	ND
V	Vanadium	ND	ND
Zn	Zinc	ND	ND

©2016 Ecolab USA Inc. All Rights Reserved

Scenario: Vancouver Terminal SCN_002
Flow Name: Condensate return
Flow Rate: 133.926 gpm

Anion			
Symbol	**Name**	**mg/L as $CaCO_3$**	**mg/L as Ion**
B4O7	Borate	ND	ND
Br	Bromide	ND	ND
Cl	Chloride	0.0018	0.0012
CN	Cyanide	ND	ND
CO3	Carbonate	0.0298	0.0179
F	Fluoride	0.0000	0.0000
HCO3	Bicarbonate	0.0085	0.0104
I	Iodide	ND	ND
MoO4	Molybdate	ND	ND
NO2	Nitrite	ND	ND
NO3	Nitrate	0.0022	0.0027
OH	Hydrate	ND	ND
P	Phosphorous (Valence 3)	ND	ND
PO4	Phosphate (as PO4)	0.0001	0.0001
SiO3	Silicate	NA	NA
SO3	Sulfite	0.0821	0.0657
SO4	Sulfate	0.0023	0.0022

©2016 Ecolab USA Inc. All Rights Reserved

Scenario: Vancouver Terminal SCN_002
Flow Name: Condensate return
Flow Rate: 133.926 gpm

Other			
Symbol	**Name**	**mg/L as $CaCO_3$**	**mg/L as Ion**
$/1000 gal	Dollar per 1000 gallon	NC	NC
BOD5	5 Day Biochemical Oxygen Demand	NT	NT
CO2	Carbon Dioxide	NT	NT
CO2-gas	Carbon Dioxide Gas (Undissolved)	0.2035	0.1790
COD	Chemical Oxygen Demand	NT	NT
Conductivity	Conductivity	0.1984	0.1984
Enthalpy	Enthalpy	NC	NC
FOG	Free Oil and Grease	NT	NT
H2S	Hydrogen Sulfide	NT	NT
Ionic Strength	Ionic Strength	NC	NC
Langlier Stability Index	Langlier Stability Index	NC	NC
M Alkalinity	Total Alkalinity	0.0383	0.0383
NH3	Ammonia	NT	NT
O2	Oxygen	NT	NT
OCl	Hypoclorite	NT	NT
P Alkalinity	P Alkalinity	0.0149	0.0149
pH	pH	7.5337	7.5337
pHeq	pHeq	2.4644	2.4644
pHs	pHs	0.0000	0.0000
psia	Pounds per Square Inch Absolute	19.6960	19.6960
Puckorius Scale Index	Puckorius Scale Index	NC	NC
Ryznar Index	Ryznar Index	NC	NC
SAR	Saline Absorption Ratio	NC	NC
Screenings	Screenings	NA	NA
Silica Sol	Silica Sol	NA	NA
SiO2	Silica	0.0001	0.0001
SiO2-Colloidal	SiO2-Colloidal	ND	ND
Sulfur	Sulfur	NA	NA
TDS	Total Disolved Solids	0.1587	0.1587
TempF	Temperature Fahrenheit	227.1465	227.1465
TOC	Total Organic Carbon	NT	NT
Total Hardness	Total Hardness	NC	NC
TSS	Total Suspended Solids	0.0345	0.0345

©2016 Ecolab USA Inc. All Rights Reserved

Scenario: Vancouver Terminal SCN_002
Flow Name: Boiler Feed Water
Flow Rate: 169.218 gpm

Cation			
Symbol	Name	mg/L as $CaCO_3$	mg/L as Ion
Ag	Silver	ND	ND
Al	Aluminum	ND	ND
As	Arsenic	ND	ND
Au	Gold	ND	ND
B	Boron	ND	ND
Ba	Barium	ND	ND
Be	Beryllium	ND	ND
Ca	Calcium	0.0021	0.0009
Cd	Cadmium	ND	ND
Co	Cobalt	ND	ND
Cr	Chromium	ND	ND
Cu	Copper	ND	ND
Cu I	Copper (cuprous)	ND	ND
Fe	Iron	ND	ND
Fe II	Iron (ferrous)	ND	ND
H+	Hydronium	ND	ND
Hg	Mercury	ND	ND
K	Potassium	0.0138	0.0108
Li	Lithium	ND	ND
Mg	Magnesium	0.0015	0.0004
Mn	Manganese (Manganous)	ND	ND
Mo	Molybdenum	0.0000	0.0000
Na	Sodium	1.5724	0.7224
NH4	Ammonia	ND	ND
Ni	Nickel	ND	ND
Pb	Lead	ND	ND
S	Sulfur	ND	ND
Sb	Antimony	ND	ND
Se	Selenium	ND	ND
Si	Silicon	ND	ND
Sm	Samarium	ND	ND
Sn	Tin	ND	ND
Sr	Strontium	0.0004	0.0004
Ti	Titanium	ND	ND
Tl	Thallium (thallic)	ND	ND
U	Uranium (valence 4)	ND	ND
V	Vanadium	ND	ND
Zn	Zinc	0.0001	0.0001

©2016 Ecolab USA Inc. All Rights Reserved

Scenario: Vancouver Terminal SCN_002
Flow Name: Boiler Feed Water
Flow Rate: 169.218 gpm

Anion			
Symbol	**Name**	**mg/L as $CaCO_3$**	**mg/L as Ion**
B4O7	Borate	ND	ND
Br	Bromide	ND	ND
Cl	Chloride	0.0319	0.0226
CN	Cyanide	ND	ND
CO3	Carbonate	1.3142	0.7879
F	Fluoride	NT	NT
HCO3	Bicarbonate	0.0959	0.1169
I	Iodide	ND	ND
MoO4	Molybdate	ND	ND
NO2	Nitrite	ND	ND
NO3	Nitrate	0.0396	0.0491
OH	Hydrate	ND	ND
P	Phosphorous (Valence 3)	ND	ND
PO4	Phosphate (as PO4)	0.0019	0.0012
SiO3	Silicate	NT	NT
SO3	Sulfite	0.0650	0.0520
SO4	Sulfate	0.0420	0.0403

©2016 Ecolab USA Inc. All Rights Reserved

Scenario: Vancouver Terminal SCN_002
Flow Name: Boiler Feed Water
Flow Rate: 169.218 gpm

Other			
Symbol	**Name**	**mg/L as $CaCO_3$**	**mg/L as Ion**
$/1000 gal	Dollar per 1000 gallon	NC	NC
BOD5	5 Day Biochemical Oxygen Demand	NT	NT
CO2	Carbon Dioxide	NT	NT
CO2-gas	Carbon Dioxide Gas (Undissolved)	NT	NT
COD	Chemical Oxygen Demand	NT	NT
Conductivity	Conductivity	2.2561	2.2561
Enthalpy	Enthalpy	NC	NC
FOG	Free Oil and Grease	ND	ND
H2S	Hydrogen Sulfide	NT	NT
Ionic Strength	Ionic Strength	NC	NC
Langlier Stability Index	Langlier Stability Index	-3.6228	-3.6228
M Alkalinity	Total Alkalinity	1.4101	1.4101
NH3	Ammonia	NT	NT
O2	Oxygen	NT	NT
OCl	Hypoclorite	NT	NT
P Alkalinity	P Alkalinity	0.6571	0.6571
pH	pH	9.1021	9.1021
pHeq	pHeq	4.7586	4.7586
pHs	pHs	12.7249	12.7249
psia	Pounds per Square Inch Absolute	24.6959	24.6959
Puckorius Scale Index	Puckorius Scale Index	20.6912	20.6912
Ryznar Index	Ryznar Index	16.3478	16.3478
SAR	Saline Absorption Ratio	5.1753	5.1753
Screenings	Screenings	NA	NA
Silica Sol	Silica Sol	NA	NA
SiO2	Silica	0.1252	0.1503
SiO2-Colloidal	SiO2-Colloidal	0.0026	0.0031
Sulfur	Sulfur	NA	NA
TDS	Total Disolved Solids	1.8049	1.8049
TempF	Temperature Fahrenheit	240.0000	240.0000
TOC	Total Organic Carbon	NT	NT
Total Hardness	Total Hardness	0.0037	0.0037
TSS	Total Suspended Solids	0.6219	0.6219

©2016 Ecolab USA Inc. All Rights Reserved

Scenario: Vancouver Terminal SCN_002
Flow Name: Boiler BD
Flow Rate: 1.69218 gpm

Cation			
Symbol	Name	mg/L as $CaCO_3$	mg/L as Ion
Ag	Silver	ND	ND
Al	Aluminum	ND	ND
As	Arsenic	ND	ND
Au	Gold	ND	ND
B	Boron	ND	ND
Ba	Barium	ND	ND
Be	Beryllium	ND	ND
Ca	Calcium	ND	ND
Cd	Cadmium	ND	ND
Co	Cobalt	ND	ND
Cr	Chromium	ND	ND
Cu	Copper	ND	ND
Cu I	Copper (cuprous)	ND	ND
Fe	Iron	ND	ND
Fe II	Iron (ferrous)	ND	ND
H+	Hydronium	ND	ND
Hg	Mercury	ND	ND
K	Potassium	1.3062	1.0205
Li	Lithium	ND	ND
Mg	Magnesium	ND	ND
Mn	Manganese (Manganous)	ND	ND
Mo	Molybdenum	ND	ND
Na	Sodium	215.9435	99.2036
NH4	Ammonia	ND	ND
Ni	Nickel	ND	ND
Pb	Lead	ND	ND
S	Sulfur	ND	ND
Sb	Antimony	ND	ND
Se	Selenium	ND	ND
Si	Silicon	ND	ND
Sm	Samarium	ND	ND
Sn	Tin	ND	ND
Sr	Strontium	ND	ND
Ti	Titanium	ND	ND
Tl	Thallium (thallic)	ND	ND
U	Uranium (valence 4)	ND	ND
V	Vanadium	ND	ND
Zn	Zinc	0.0085	0.0062

©2016 Ecolab USA Inc. All Rights Reserved

Scenario: Vancouver Terminal SCN_002
Flow Name: Boiler BD
Flow Rate: 1.69218 gpm

Anion			
Symbol	**Name**	**mg/L as $CaCO_3$**	**mg/L as Ion**
B4O7	Borate	ND	ND
Br	Bromide	ND	ND
Cl	Chloride	3.0121	2.1339
CN	Cyanide	ND	ND
CO3	Carbonate	51.0323	30.5973
F	Fluoride	0.0000	0.0000
HCO3	Bicarbonate	14.5948	17.7951
I	Iodide	ND	ND
MoO4	Molybdate	ND	ND
NO2	Nitrite	ND	ND
NO3	Nitrate	3.7440	4.6389
OH	Hydrate	ND	ND
P	Phosphorous (Valence 3)	ND	ND
PO4	Phosphate (as PO4)	0.1799	0.1138
SiO3	Silicate	NA	NA
SO3	Sulfite	140.7221	112.5702
SO4	Sulfate	3.9730	3.8133

©2016 Ecolab USA Inc. All Rights Reserved

Scenario: Vancouver Terminal SCN_002
Flow Name: Boiler BD
Flow Rate: 1.69218 gpm

Other			
Symbol	**Name**	**mg/L as $CaCO_3$**	**mg/L as Ion**
$/1000 gal	Dollar per 1000 gallon	NC	NC
BOD5	5 Day Biochemical Oxygen Demand	NT	NT
CO2	Carbon Dioxide	NT	NT
CO2-gas	Carbon Dioxide Gas (Undissolved)	NT	NT
COD	Chemical Oxygen Demand	NT	NT
Conductivity	Conductivity	339.8661	339.8661
Enthalpy	Enthalpy	NC	NC
FOG	Free Oil and Grease	ND	ND
H2S	Hydrogen Sulfide	NT	NT
Ionic Strength	Ionic Strength	0.0042	0.0042
Langlier Stability Index	Langlier Stability Index	0.0000	0.0000
M Alkalinity	Total Alkalinity	65.6271	65.6271
NH3	Ammonia	NT	NT
O2	Oxygen	NT	NT
OCl	Hypoclorite	NT	NT
P Alkalinity	P Alkalinity	25.5162	25.5162
pH	pH	10.3037	10.3037
pHeq	pHeq	7.2020	7.2020
pHs	pHs	NC	NC
psia	Pounds per Square Inch Absolute	14.6960	14.6960
Puckorius Scale Index	Puckorius Scale Index	NC	NC
Ryznar Index	Ryznar Index	NC	NC
SAR	Saline Absorption Ratio	NC	NC
Screenings	Screenings	NA	NA
Silica Sol	Silica Sol	NA	NA
SiO2	Silica	12.7654	15.3267
SiO2-Colloidal	SiO2-Colloidal	ND	ND
Sulfur	Sulfur	NA	NA
TDS	Total Disolved Solids	271.8929	271.8929
TempF	Temperature Fahrenheit	95.0000	95.0000
TOC	Total Organic Carbon	NT	NT
Total Hardness	Total Hardness	NC	NC
TSS	Total Suspended Solids	59.1845	59.1845

©2016 Ecolab USA Inc. All Rights Reserved

Scenario: Vancouver Terminal SCN_002
Flow Name: RO Waste Water
Flow Rate: 11.7641 gpm

Cation			
Symbol	Name	mg/L as $CaCO_3$	mg/L as Ion
Ag	Silver	ND	ND
Al	Aluminum	ND	ND
As	Arsenic	ND	ND
Au	Gold	ND	ND
B	Boron	ND	ND
Ba	Barium	0.0259	0.0356
Be	Beryllium	0.0000	0.0000
Ca	Calcium	325.9355	130.5150
Cd	Cadmium	ND	ND
Co	Cobalt	ND	ND
Cr	Chromium	ND	ND
Cu	Copper	ND	ND
Cu I	Copper (cuprous)	ND	ND
Fe	Iron	ND	ND
Fe II	Iron (ferrous)	ND	ND
H+	Hydronium	ND	ND
Hg	Mercury	ND	ND
K	Potassium	16.7051	13.0515
Li	Lithium	ND	ND
Mg	Magnesium	157.9792	38.3635
Mn	Manganese (Manganous)	ND	ND
Mo	Molybdenum	ND	ND
Na	Sodium	59.9000	27.5178
NH4	Ammonia	ND	ND
Ni	Nickel	ND	ND
Pb	Lead	ND	ND
S	Sulfur	ND	ND
Sb	Antimony	ND	ND
Se	Selenium	ND	ND
Si	Silicon	ND	ND
Sm	Samarium	ND	ND
Sn	Tin	ND	ND
Sr	Strontium	0.5512	0.4825
Ti	Titanium	ND	ND
Tl	Thallium (thallic)	ND	ND
U	Uranium (valence 4)	ND	ND
V	Vanadium	ND	ND
Zn	Zinc	0.1086	0.0791

©2016 Ecolab USA Inc. All Rights Reserved

Scenario: Vancouver Terminal SCN_002
Flow Name: RO Waste Water
Flow Rate: 11.7641 gpm

Anion			
Symbol	**Name**	**mg/L as $CaCO_3$**	**mg/L as Ion**
B4O7	Borate	ND	ND
Br	Bromide	ND	ND
Cl	Chloride	38.5206	27.2895
CN	Cyanide	ND	ND
CO3	Carbonate	ND	ND
F	Fluoride	NT	NT
HCO3	Bicarbonate	421.6943	514.1622
I	Iodide	ND	ND
MoO4	Molybdate	ND	ND
NO2	Nitrite	ND	ND
NO3	Nitrate	47.8805	59.3250
OH	Hydrate	ND	ND
P	Phosphorous (Valence 3)	ND	ND
PO4	Phosphate (as PO4)	2.3004	1.4552
SiO3	Silicate	NA	NA
SO3	Sulfite	ND	ND
SO4	Sulfate	50.8097	48.7672

©2016 Ecolab USA Inc. All Rights Reserved

Scenario: Vancouver Terminal SCN_002
Flow Name: RO Waste Water
Flow Rate: 11.7641 gpm

Other			
Symbol	**Name**	**mg/L as $CaCO_3$**	**mg/L as Ion**
$/1000 gal	Dollar per 1000 gallon	NC	NC
BOD5	5 Day Biochemical Oxygen Demand	NT	NT
CO2	Carbon Dioxide	0.4103	0.3608
CO2-gas	Carbon Dioxide Gas (Undissolved)	0.8038	0.7069
COD	Chemical Oxygen Demand	NT	NT
Conductivity	Conductivity	1076.3053	1076.3053
Enthalpy	Enthalpy	NC	NC
FOG	Free Oil and Grease	NT	NT
H2S	Hydrogen Sulfide	NT	NT
Ionic Strength	Ionic Strength	0.0166	0.0166
Langlier Stability Index	Langlier Stability Index	1.3187	1.3187
M Alkalinity	Total Alkalinity	421.6943	421.6943
NH3	Ammonia	NT	NT
O2	Oxygen	NT	NT
OCl	Hypoclorite	NT	NT
P Alkalinity	P Alkalinity	ND	ND
pH	pH	8.1808	8.1808
pHeq	pHeq	8.3856	8.3856
pHs	pHs	6.8621	6.8621
psia	Pounds per Square Inch Absolute	44.6959	44.6959
Puckorius Scale Index	Puckorius Scale Index	5.3387	5.3387
Ryznar Index	Ryznar Index	5.5435	5.5435
SAR	Saline Absorption Ratio	0.5430	0.5430
Screenings	Screenings	NA	NA
Silica Sol	Silica Sol	NA	NA
SiO2	Silica	158.1153	189.8400
SiO2-Colloidal	SiO2-Colloidal	3.2941	3.9550
Sulfur	Sulfur	NA	NA
TDS	Total Disolved Solids	861.0442	861.0442
TempF	Temperature Fahrenheit	75.2618	75.2618
TOC	Total Organic Carbon	NT	NT
Total Hardness	Total Hardness	483.9146	483.9146
TSS	Total Suspended Solids	0.0000	0.0000

©2016 Ecolab USA Inc. All Rights Reserved

Scenario: Vancouver Terminal SCN_002
Flow Name: Final Waste
Flow Rate: 15.5563 gpm

Cation			
Symbol	Name	mg/L as $CaCO_3$	mg/L as Ion
Ag	Silver	ND	ND
Al	Aluminum	ND	ND
As	Arsenic	ND	ND
Au	Gold	ND	ND
B	Boron	ND	ND
Ba	Barium	0.0200	0.0275
Be	Beryllium	0.0000	0.0000
Ca	Calcium	251.7791	100.8204
Cd	Cadmium	ND	ND
Co	Cobalt	ND	ND
Cr	Chromium	ND	ND
Cu	Copper	ND	ND
Cu I	Copper (cuprous)	ND	ND
Fe	Iron	ND	ND
Fe II	Iron (ferrous)	ND	ND
H+	Hydronium	ND	ND
Hg	Mercury	ND	ND
K	Potassium	13.0465	10.1931
Li	Lithium	ND	ND
Mg	Magnesium	122.0360	29.6351
Mn	Manganese (Manganous)	ND	ND
Mo	Molybdenum	ND	ND
Na	Sodium	69.6925	32.0165
NH4	Ammonia	ND	ND
Ni	Nickel	ND	ND
Pb	Lead	ND	ND
S	Sulfur	ND	ND
Sb	Antimony	ND	ND
Se	Selenium	ND	ND
Si	Silicon	ND	ND
Sm	Samarium	ND	ND
Sn	Tin	ND	ND
Sr	Strontium	0.4258	0.3727
Ti	Titanium	ND	ND
Tl	Thallium (thallic)	ND	ND
U	Uranium (valence 4)	ND	ND
V	Vanadium	ND	ND
Zn	Zinc	0.0848	0.0618

©2016 Ecolab USA Inc. All Rights Reserved

Scenario: Vancouver Terminal SCN_002
Flow Name: Final Waste
Flow Rate: 15.5563 gpm

Anion			
Symbol	**Name**	**mg/L as $CaCO_3$**	**mg/L as Ion**
B4O7	Borate	ND	ND
Br	Bromide	ND	ND
Cl	Chloride	30.0843	21.3128
CN	Cyanide	ND	ND
CO3	Carbonate	3.9780	2.3851
F	Fluoride	NT	NT
HCO3	Bicarbonate	328.3498	400.3494
I	Iodide	ND	ND
MoO4	Molybdate	ND	ND
NO2	Nitrite	ND	ND
NO3	Nitrate	38.0370	47.1287
OH	Hydrate	ND	ND
P	Phosphorous (Valence 3)	ND	ND
PO4	Phosphate (as PO4)	1.7966	1.1365
SiO3	Silicate	NA	NA
SO3	Sulfite	15.3133	12.2498
SO4	Sulfate	39.5258	37.9369

©2016 Ecolab USA Inc. All Rights Reserved

Scenario: Vancouver Terminal SCN_002
Flow Name: Final Waste
Flow Rate: 15.5563 gpm

Other			
Symbol	**Name**	**mg/L as $CaCO_3$**	**mg/L as Ion**
$/1000 gal	Dollar per 1000 gallon	NC	NC
BOD5	5 Day Biochemical Oxygen Demand	6.4283	6.4283
CO2	Carbon Dioxide	NT	NT
CO2-gas	Carbon Dioxide Gas (Undissolved)	NT	NT
COD	Chemical Oxygen Demand	NT	NT
Conductivity	Conductivity	869.5330	869.5330
Enthalpy	Enthalpy	NC	NC
FOG	Free Oil and Grease	7.7139	7.7139
H2S	Hydrogen Sulfide	NT	NT
Ionic Strength	Ionic Strength	0.0133	0.0133
Langlier Stability Index	Langlier Stability Index	1.3559	1.3559
M Alkalinity	Total Alkalinity	332.3278	332.3278
NH3	Ammonia	NT	NT
O2	Oxygen	NT	NT
OCl	Hypoclorite	NT	NT
P Alkalinity	P Alkalinity	1.9890	1.9890
pH	pH	8.4188	8.4188
pHeq	pHeq	8.2341	8.2341
pHs	pHs	7.0630	7.0630
psia	Pounds per Square Inch Absolute	37.3828	37.3828
Puckorius Scale Index	Puckorius Scale Index	5.8918	5.8918
Ryznar Index	Ryznar Index	5.7071	5.7071
SAR	Saline Absorption Ratio	0.7188	0.7188
Screenings	Screenings	NA	NA
Silica Sol	Silica Sol	NA	NA
SiO2	Silica	123.5298	148.3151
SiO2-Colloidal	SiO2-Colloidal	2.5446	3.0552
Sulfur	Sulfur	NA	NA
TDS	Total Disolved Solids	695.6264	695.6264
TempF	Temperature Fahrenheit	75.7740	75.7740
TOC	Total Organic Carbon	NT	NT
Total Hardness	Total Hardness	373.8151	373.8151
TSS	Total Suspended Solids	6.4404	6.4404

©2016 Ecolab USA Inc. All Rights Reserved

©2016 Ecolab USA Inc. All Rights Reserved

PPV Inc. Vancouver Energy Treatment Summary

General Information

PPV Inc. has been in operation since 2003 serving as the primary wastewater pretreatment and disposal facility in the Portland area. We serve companies large and small who generate nonhazardous wastewater but do not have the resources to treat it themselves before disposal. In addition to wastewater pretreatment we offer extraction and transport services through our subsidiary company Bravo Environmental, making us a comprehensive source for all your wastewater needs.

Waste Acceptance

At PPV we are permitted to accept and treat wastewater containing oil/metals, organics, and septic. Prior to accepting any new waste stream, we require analytical testing of the material that at least matches our prescribed analytical script, this allows us to identify problem contaminants for effective treatment. Analytical testing must be done through a certified third party laboratory. Using the analytical results clients fill out and return our Waste Information Profile (WIP). When the material arrives at our facility samples are taken to ensure that it matches how it is described in the WIP, If the material does not match the load is rejected and returned to the generator or held for further testing.

We do not accept wastes containing PCB's, cyanide, DMSO, glycols, fuel and fuel derivatives, solvents, pesticides, and other hazardous material. For a full list of what we cannot accept please see our Prohibited Compounds Form.

Treatment Process

Wastes with similar characteristics are segregated into separate holding tanks and treated in batches according to an assigned treatability plan. Treatability plans are specifically designed for each waste type and use a combination of physical and chemical treatment to effectively remove problem contaminants.

All material goes through a general treatment process that removes solids using filters, sieves, shakers, dissolved air flotation, and centrifuge. Oil/metal bearing wastewater goes through additional treatment in our Oil Water Separator to separate and remove oil from the water. Removed oil is sold to a processor and the water is discharged to the municipal sewer system.

QC Monitoring

Using our in-house laboratory, we conduct self-monitoring QC checks every day on outgoing effluent to ensure compliance with our permit. Additionally, we also conduct intermittent testing at random points within our treatment train.

Copyright © BergerABAM. All Rights Reserved.

PROCESS SCHEMATIC FOR WASTEWATER DISCHARGES

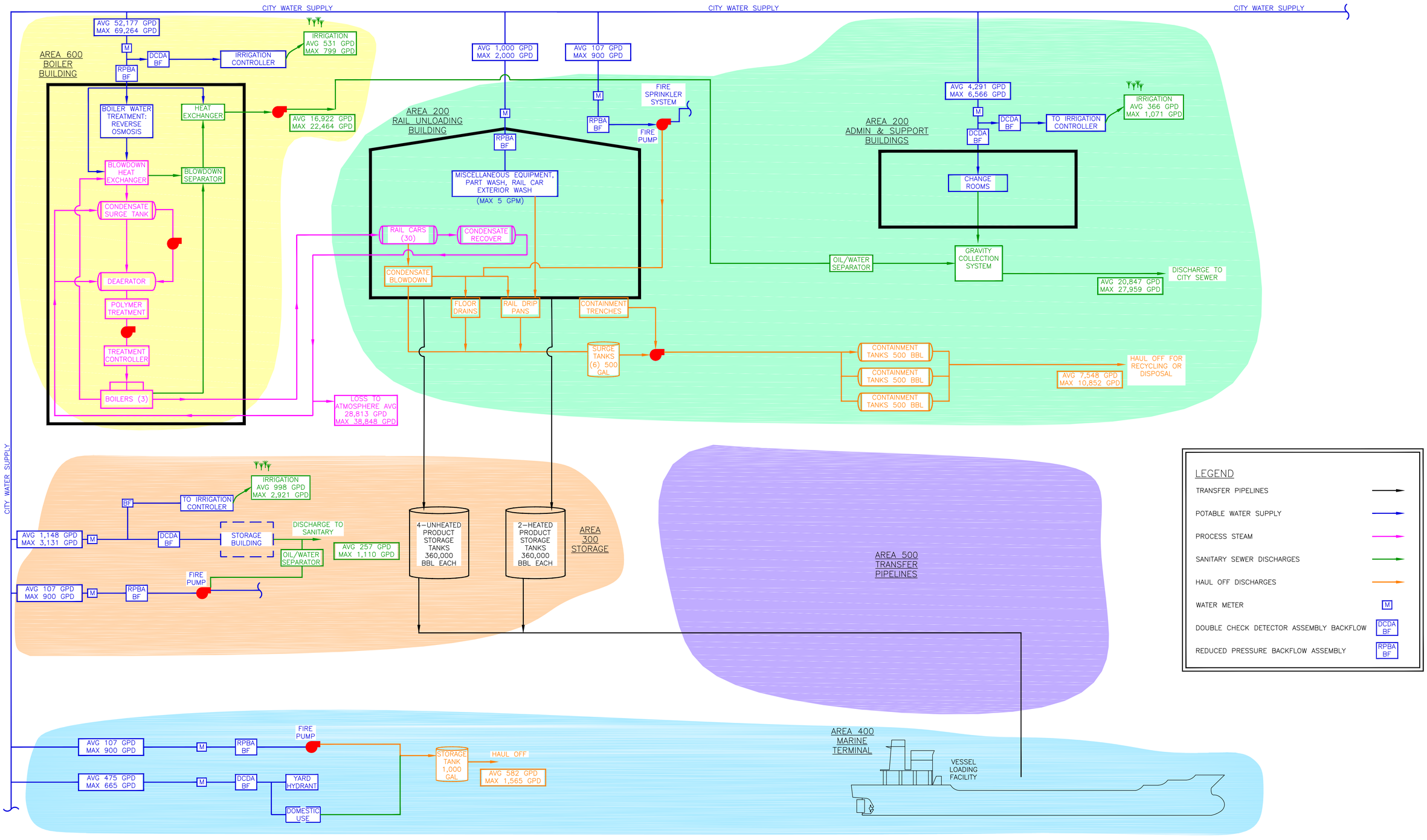

Last Saved by: Tony pritchett on: May 20, 2016 7:38 AM File: Q:\Vancouver\2013\A13.0267\00\CAD\Dwg\PRE-APP\PROCESS SCHEMATIC - WASTEWATER DISCHARGES.dwg

Vancouver Energy
National Pollutant Discharge Elimination System Permit Engineering Report

This page left blank intentionally.

Vancouver Energy
National Pollutant Discharge Elimination System Permit
Engineering Report

EFSEC Application for Site Certification No. 2013-01
Docket No. EF131590
15 October 2015

Prepared for

Tesoro Savage Petroleum Terminal LLC
5501 NW Old Lower River Road
Vancouver, Washington 98660

Prepared by

BergerABAM
210 East 13th Street, Suite 300
Vancouver, Washington 98660

Job No. A13.0267.00

This Engineering Report was prepared under the supervision and direction of the undersigned, whose seal as a registered professional engineer is affixed below.

_____
Thomas R. Wilcox, PE, Vice President
BergerABAM Inc.

Revision Summary

No.	Date	Edits/Comments [table heading]
01	27 February 2015	Submittal for Application review
02	15 October 2015	Revisions in response to EFSEC comment letter dated 6 August 2015

Vancouver Energy
National Pollutant Discharge Elimination System Permit Engineering Report

Table of Contents

Section

Executive Summary v
1. Project Overview 1
1.1 Introduction 1
1.2 Regulatory Applicability 1
1.3 Site Description 2
1.4 Existing Conditions 6
1.4.1 Stormwater Conveyance and Treatment Systems 6
1.4.2 Sewer Conveyance and Treatment Systems 13
1.4.3 Surface Water Bodies 17
1.4.4 Floodplains 18
1.4.5 Wetlands 18
1.4.6 Soils Evaluation 19
1.4.7 Past Site Remediation 19
1.4.8 Climate 24
1.5 Project Overview 24
2. Type of Industry or Business 25
3. Kind and Quantity of Product 25
4. Project Summary 25
5. Operational Quantity and Quality of Industrial Stormwater 26
5.1 Flow Control Exemption 27
5.2 Stormwater Collection and Conveyance 27
5.2.1 Collection and Conveyance System Design Standards 27
5.2.2 Area 200 – Unloading and Office 33
5.2.3 Area 300 – Storage 35
5.2.4 Area 400 – Marine Terminal 38
5.2.5 Area 500 – Transfer Pipelines 39
5.2.6 Area 600 – West Boiler 39
5.2.7 Rail Infrastructure 40
6. Industrial Stormwater Best Management Practices 40
6.1 Structural Best Management Practices 40
6.1.1 Area 200 – Unloading and Office 40
6.1.2 Area 300 – Storage 41
6.1.3 Area 400 – Marine Terminal 42
6.1.4 Area 500 – Transfer Pipelines 42
6.1.5 Area 600 – West Boiler 43

6.1.6 Rail Improvements ... 43
6.2 Operational Best Management Practices ... 45
7. Stormwater Treatment and Design ... 46
7.1 Chemicals Used in Treatment Process ... 46
7.2 Design and Sizing of Treatment Process and Units ... 46
7.2.1 Area 200 – Unloading and Office ... 48
7.2.2 Area 300 – Storage ... 50
7.2.3 Area 400 – Marine Terminal ... 52
7.2.4 Area 500 – Transfer Pipelines ... 54
7.2.5 Area 600 – West Boiler ... 54
7.2.6 Rail Infrastructure ... 54
7.3 Site Suitability ... 54
7.4 Treatment Process Operation ... 55
7.5 Treatment Bypasses ... 55
8. Operational Quantity and Quality of Industrial Water and Process Wastewater ... 55
8.1 Water Supply ... 55
8.2 Process Water ... 58
8.3 Process Wastewater ... 58
8.3.1 Area 200 Miscellaneous Part/Equipment Wash ... 59
8.3.2 Area 600 Boiler Effluent ... 60
8.3.3 Area 300 Basin Sump Effluent ... 61
8.3.4 Areas 200, 300, and 400 Fire Pump Cooling Water ... 62
9. Domestic Water and Wastewater ... 62
9.1 Water Supply ... 62
9.2 Potable Water ... 62
9.3 Domestic Wastewater ... 63
10. Oil and Hazardous Material Spill Control or Accidental Discharge Prevention ... 63
11. Receiving Water Description ... 64
11.1 Location of Discharge ... 64
11.2 Water Quality ... 64
11.3 Outfall Analysis ... 65
12. Relationship to Existing Treatment Facilities ... 65
12.1 Terminal 4 Treatment Facilities ... 65
12.2 Terminal 5 Treatment Facilities ... 65
12.3 Marine Terminal Treatment Facilities ... 66
13. Municipal Wastewater System Analysis ... 66
13.1 Conveyance System Capacity ... 66
13.2 Treatment Plant Capacity ... 67
14. Sludge Disposal ... 67
15. Ownership Operation and Maintenance Responsibility ... 67
16. Compliance with State, Local, and Federal Water Pollution Regulations and Plans ... 67
16.1 Federal Standards ... 68
16.2 State Standards ... 68
16.2.1 Statutes ... 68

16.2.2 Stormwater Management Manual 68
16.3 City Standards 70
17. Provisions for Future Construction 71
17.1 Unloading Stations 71
17.2 West Boiler 72
17.3 Product Storage Tanks 72
18. Treatment Unit Alternatives Analysis 72
18.1 Basic Treatment Units 72
18.2 Enhanced Treatment Units 73
18.3 Oil-Water Separators 73
18.4 Volatile Organics/BTEX Treatment 73
19. Design and Construction Timetable 74
20. SEPA/NEPA Compliance 74
21. List of Acronyms and Abbreviations 75

List of Tables

Table 1. Applicable Federal, State, and Local Permits and Requirements 1
Table 2. Summary of Facility Areas 4
Table 3. Drainage and Facility Areas 6
Table 4. Floodplains 18
Table 5. Design Storm Rainfall Intensity 24
Table 6. Facility Site Stormwater Summary 25
Table 7. Facility Process Wastewater Discharge Summary 26
Table 8. Domestic Wastewater Summary 26
Table 9. Summary of 25-Year Storm Event Model Results 28
Table 10. Areas 200/600 - Unloading and Office, incl West Boiler - Proposed Surface Coverage 33
Table 11. Area 200 - Unloading and Office - Collection System Model Results 34
Table 12. Area 300 - Storage Area - Proposed Surface Coverage 36
Table 13. Area 300 - Storage Area - Collection System Model Results 36
Table 14. Area 400 - Marine Terminal - Proposed Surface Coverage 39
Table 15. Rail Improvements - Proposed Surface Coverage 40
Table 16. Area 200 - Unloading and Office - Structural BMPs 41
Table 17. Area 300 - Storage - Structural BMPs 41
Table 18. Area 400 - Marine Terminal - Structural BMPs 42
Table 19. Area 500 - Transfer Pipelines - Structural BMPs 42
Table 20. West Boiler - Structural BMPs 43
Table 21. Rail Improvements - Structural BMPs 45
Table 22. Anticipated Water Quality Benchmarks 46
Table 23. Pollutant Loadings for Each Facility Surface Type 47
Table 24. Contributing Area to Water Quality Vault 0200-WQV-001 48
Table 25. Terminal 5 - Area 200 Monitoring Point 1 Summary 49
Table 26. Contributing Area to 0200-WQV-002 49
Table 27. Terminal 5 - Area 200 Monitoring Point 2 Summary 50
Table 28. Contributing Area to 0300-WQV-002 51

Table 29. Contributing Area to 0300-WQV-001 51
Table 30. Area 300 – Monitoring Point 3 Summary 52
Table 31. Contributing Area to 0400-WQV-001 and 0400-WQV-002 53
Table 32. Marine Terminal Area 400 Monitoring Point 4 Summary 54
Table 33. Process Water uses and Usage Rates 58
Table 34. Process Wastewater Sources 59
Table 35. Anticipated Effluent Constituents 60
Table 36. Detailed Effluent Analysis Summary 60
Table 37. Potable Water uses and Usage Rates 62
Table 38. Domestic Wastewater Sources 63
Table 39. Process Wastewater Constituent Concentrations 70
Table 40. Rejected Alternatives – Basic Treatment 73
Table 41. Rejected Alternatives – Enhanced Treatment 73
Table 42. Rejected Alternatives – Oil Treatment 73
Table 43. Rejected Alternatives – Volatile Organic Treatment 74
Table 44. Permitting and Construction Milestones 74

List of Figures

Figure 1. Vicinity Map 3
Figure 2. Site Plan 5
Figure 3. Existing Terminal 4 Stormwater System 7
Figure 4. Existing Terminal 5 Stormwater System 11
Figure 5. Existing Marine Terminal Stormwater System 15
Figure 6. Contaminated Media Locations 20
Figure 7. Drainage Basin Maps – Terminal 4 29
Figure 8. Drainage Basin Maps – Terminal 5 31
Figure 9. Flow Diagram for Process Water Uses and Wastewater 56
Figure 10. City Water Distribution Network 57

List of Appendices

Appendix A. NOAA Isopluvial Maps for Washington State
Appendix B. Federal Emergency Management Agency Flood Insurance Rate Maps
Appendix C. Stormwater Facility Design Plans
Appendix D. Existing Drainage Reports
Appendix E. Water Quality Model Results
Appendix F. Conveyance System Model Results
Appendix G. Oil-Water Separator Sizing Calculations
Appendix H. Water Quality Vault Sizing Calculations
Appendix I. Geotechnical Investigation Reports
Appendix J. Product, Stored Bulk Liquids, and Hazardous Material Safety Data Sheets
Appendix K. Wastewater Permit Application
Appendix L. Stormwater Permit Application
Appendix M. Utility Letters

Executive Summary

The purpose of this National Pollutant Discharge Elimination System Permit (NPDES) engineering report is to comprehensively address the design and operations of discharges from Vancouver Energy (Facility) as they pertain to industrial stormwater, domestic wastewater, and process wastewater. Tesoro Savage Petroleum Terminal LLC (Applicant) has applied to the Washington State Energy Facility Site Evaluation Council (EFSEC) for a permit to construct and operate the Facility. An Individual NPDES Industrial Stormwater Permit and a State Waste Discharge Permit to Discharge Industrial Wastewater to a Publicly Owned Treatment Works is required for the Facility in accordance with WACs 463-76-010(33), 463-76-031(1)(a), and 173-216. In response to EFSEC's request, the Applicant submitted an engineering report on 9 April 2014 and a revised version on 27 February 2015.

The Facility will not expose crude oil to stormwater under normal operations. A completely closed system located in a protective building will contain all crude oil during the rail unloading operations. Transfer of crude oil will be completed using continuously welded steel pipelines. Product will be stored in tanks, each tank equipped with (1) a floating roof to control vapors and (2) a fixed roof to keep stormwater from reaching the inside of the tank. The vessel loading operations will use hoses that will be connected to a fully piped manifold system on the vessel to avoid contact with stormwater. Inert gases displaced by the crude oil in the vessel will be piped from the vessel to marine vapor combustion units capable of achieving approximately 99.8 percent combustion of byproducts from the vessel.

The project as designed will use extensive stormwater separation methods to protect stormwater and surface water quality. Additionally, extensive monitoring, containment, and spill prevention measures will be in place to react to any upset conditions that could result in an accidental release of crude oil. A separate operations spill prevention control and countermeasures plan addresses all of the measures in place to prevent and respond to upset conditions.

Domestic wastewater will be generated by the Facility and discharged to the City of Vancouver's wastewater collection system. Domestic wastewater is solely generated on site in employee restrooms, showers, and kitchen facilities. The domestic wastewater facilities are physically separated from the portions of the facility handling crude oil to reduce any potential releases of process wastewater or product into the domestic wastewater system.

Process wastewater on site is primarily generated at the West Boiler building. A nominal amount of blowdown will be generated at the facility. The blowdown will be treated on site to water quality levels required by the City's Pretreatment Ordinance (VMC 14.10) and state and federal requirements (RCW 90.48, WAC 173-216, and 40 CFR Chapter I, Subchapter N). Other sources of process wastewater, including wash water and unloading facility floor drains, will be collected and hauled off site to an appropriate facility for disposal. Other minor sources of process wastewater includes intermittent emergency equipment cycling, which are discharged to the nearest sanitary or stormwater system upstream of treatment units.

An Individual Construction Permit also will be required under the NPDES system. A construction stormwater pollution prevention plan has been prepared and submitted under separate cover.

This report demonstrates that the Facility as designed is capable of compliance with current surface water quality regulations. Stormwater from the facility can meet the current limits set forth in the Washington State Department of Ecology Industrial Stormwater General Permit. Domestic and process wastewaters discharged from the site can meet the current limits set forth in the applicable city, state, and federal pretreatment regulations.

This page left blank intentionally.

1. Project Overview

The Vancouver Energy (Facility) will construct a facility to receive crude oil by rail, store it on site, and load it on marine vessels for shipment to various consumers and end users primarily located on the West Coast. Unit trains will be indexed through the unloading area where crude oil will be gravity-drained into the collection piping system, and pumped through transfer pipelines to storage tanks or directly to berthed marine vessels. Marine vessels will arrive and moor at the dock where crude oil will be pumped from the storage tanks and loaded to marine vessels.

1.1 Introduction

This engineering report is based on the Washington Administrative Code (WAC) 173-240 and in response to the letter, dated 6 February 2014, from the Energy Facility Site Evaluation Council (EFSEC) to Kelly Flint, Tesoro Savage Petroleum Terminal LLC (Applicant). EFSEC has requested additional supporting information related to construction stormwater and industrial stormwater and to the National Pollutant Discharge Elimination System (NPDES) permits, in writing dated 29 July 2014. Clarifications to these comments were provided to the Applicant at a meeting conducted by EFSEC on 18 September 2014.

This engineering report is amended as requested in response to the letter dated 6 August 2015 from the EFSEC to Kelly Flint, the Applicant. EFSEC requested that a comprehensive engineering report be prepared that addresses discharges from the facility for operational stormwater, domestic wastewater, and process wastewater. The application for the State Waste Discharge Permit to Discharge Industrial Wastewater to a Publicly Owned Treatment Works (POTW) and required supporting information was provided with the original Application for Site Certification (ASC) in section 5.2. This report incorporates additional information and revisions to address these comments. This engineering report addresses the operational industrial stormwater, domestic wastewater, and process wastewater systems provided for the project. A separate construction stormwater pollution prevention plan (SWPPP) has been prepared and will be submitted concurrently. Additional spill prevention control and countermeasures plans (SPCCP), as well as an oil spill contingency plan, have been submitted under separate cover.

1.2 Regulatory Applicability

As required by WAC 173-240-110, before constructing or modifying industrial stormwater facilities, engineering reports, plans, and specifications for the project must be submitted to EFSEC. Table 1 is a complete list of all federal, state, and local permits and requirements for industrial stormwater that will apply to the project if it were not reviewed under the EFSEC process.

Table 1. Applicable Federal, State, and Local Permits and Requirements

Permit or Approval	Agency/Statute and/or Regulation
National Environmental Policy Act (NEPA) Compliance	U.S. Army Corps of Engineers (USACE) (anticipated federal lead agency for this project): 40 CFR 1500-1508
Section 10 Permit	USACE: Rivers and Harbors Act 33 CFR 322
Hazardous Materials and Oil Transportation Regulations	U.S. Department of Transportation: Hazardous Material Transportation Act (HMTA), 49 CFR 100-185
State Environmental Policy Act (SEPA) Compliance	EFSEC: Revised Code of Washington (RCW) 43.21C and WAC 463-47
Hydraulic Project Approval (HPA)	Washington State Department of Fish and Wildlife (WDFW): Hydraulic Code (RCW 77.55 and WAC 220-110)
NPDES Permit Program	EFSEC: Clean Water Act, 40 CFR 122.28, RCW 90.48 and WAC 463-76

Permit or Approval	Agency/Statute and/or Regulation
NPDES Industrial Stormwater Permit	Washington State Department of Ecology (Ecology)[1]: Clean Water Act, 40 CFR 122.28, RCW 90.48 and WAC 173-220
NPDES Construction Stormwater General Permit	Ecology[1]: Clean Water Act, 40 CFR 122.28, RCW 90.48 and WAC 173-220
Model Toxics Control Act (MTCA) Consent Decree/Restrictive Covenant Work	Ecology: RCW 70.105D, RCW 64.70, WAC 173-340
Facility Oil Handling Standards • Oil Transfer Requirements • Design Standards • Operations Manual • Training/Certification • Oil Transfer Response Plans	Ecology: 33 CFR 154 (Facilities Transferring Oil or Hazardous Material in Bulk), 40 CFR 112 (Oil Pollution Prevention), 40 CFR 300 (National Oil and Hazardous Substances Pollution Contingency Plan) WAC 173-180 (Facility Oil Handling Standards)
Vessel Oil Transfer Advance Notice and Containment	Ecology: 40 CFR 112 (Oil Pollution Prevention); WAC 173-184
Spill Prevention and Contingency Plans	Ecology: 40 CFR 112 (Oil Pollution Prevention) RCW 90.56 (Oil and Hazardous Substance Spill Prevention and Response), WAC 173-180 (Facility Oil Handling Standards), WAC 173-182 (Oil Spill Contingency Plan), WAC 173-183 Oil Spill Natural Resource Damage Assessment
Dangerous/Hazardous Waste Regulations	Ecology: RCRA 40 CFR 260; RCW 70.105 (Hazardous Waste Management), WAC 173-303
Site Plan Review	City of Vancouver (City): VMC 20.270
Shoreline Substantial Development Permit	City: RCW 90.58 and City Shoreline Management Program (SMP)
Critical Areas Permit	City: VMC 20.740
Major Grading Permit	City: International Building Code (IBC), VMC Title 12 and Title 17
Civil Engineering Review	City: VMC Title 10, Title 11, and Title 14
Industrial Waste Discharge Permit	City: Wastewater Discharge Standards 40 CFR Chapter I, Subchapter N, WAC 173-221A, WAC 173-216, RCW 90.48, VMC 14.10

[1] The Facility is subject to EFSEC jurisdiction and EFSEC implements its own delegated NPDES program; however, Ecology's regulations are noted here as EFSEC adopts by reference statewide water quality standards.

1.3 Site Description

The proposed Facility will be constructed at the Port of Vancouver USA (Port) within the City of Vancouver (City) in Clark County, Washington. The Facility includes operations in different "areas," each area serving a different function. The site is located on the Washington shore of the Columbia River. State Route 501 (SR 501) (Lower River Road) is located immediately to the north of the site. Each area of the Facility is described in further detail below. The entire Facility will be constructed on approximately 47.4[1] acres. See the vicinity map shown in Figure 1.

[1] As part of the revisions to this Engineering Report, the Applicant prepared more detailed drawings (included in the appendices to this report), and the approximate site acreage was recalculated. Previous information submitted to EFSEC indicated an approximate site acreage of 45 acres. The addition of 2.74 acres primarily occurs relative to an increase in the transfer pipeline corridor width in locations where ground surface is currently disturbed and already subject to industrial activity. This increase in acreage does not substantively modify the analysis of environmental impacts described in the ASC Supplement as submitted to EFSEC in January 2014. However, to present accurate engineering calculations in this Engineering Report, this adjusted site acreage has been used herein, as well as in the construction and operation SWPPPs submitted under separate cover. The Applicant also acknowledges that final Facility design will take into account actual permit conditions that are not available at this time; such conditions could also result in further adjustments to the final site boundary.

Figure 1 - Vicinity Map

LEGEND

- Project Boundary
- Vancouver_WA
- Portland,_Oregon

VANCOUVER ENERGY

Tesoro Savage Petroleum Terminal LLC

Date: February 2015

Map Notes: Aerial photo dated July 2010, courtesy of ESRI World Imagery service

N

Most of the site will be leased from the Port and will be used exclusively by the Applicant for the construction and operation of the Facility. The transfer pipelines will be located on non-exclusive easements within the port.

The site is located in the SE 1/4 of Section 18, NW 1/4 of Section 19, and the NW and NE 1/4 of Section 20, Township 2 North, Range 1 East W.M. Marine operations will occur at Port Berths 13 and 14 located at approximately Columbia River Mile 103.5 (RM 103.5). Table 2 lists the project site areas that are discussed in detail below while Figure 2 shows a site plan schematic that demonstrates the site development plan.

This engineering report describes site conditions and operational activities in detail and enumerates the proposed stormwater systems and structural and operational best management practices (BMPs). The report is organized according to the following Facility elements, which are referred to as the six "areas" listed in Table 2.

Table 2. Summary of Facility Areas

Facility Area	Project Elements	Acreage
200 – Unloading and Office	Rail Unloading Area Control Rooms/E-houses Fire Pump and Foam Building Admin/Support Buildings	7.8 Acres
300 – Storage	Crude Oil Storage Tanks Secondary Containment Berm Storage Building Pump Basin Control Room/E-house Fire Pump and Foam Building	20.8 Acres
400 – Marine Terminal	Marine Vessel Loading Hoses and Equipment Control Room/E-house Dock Safety Unit Marine Vapor Control Units Vapor Blower Skid Spill Prevention, Response and Containment Equipment Dock Improvements Piping from Vessel Loading to Marine Vapor Combustion Units	7.7 Acres
500 – Transfer Pipelines	Transfer Piping from Area 200 To Area 300 Transfer Piping from Area 300 To Area 400	4.9 Acres
600 – West Boiler	West Boiler Building Piping from West Boiler Building to Rail Unloading Area	0.8 Acre
Rail Improvements	Rail Transportation Corridor	5.4 Acres
Total		47.4 Acres

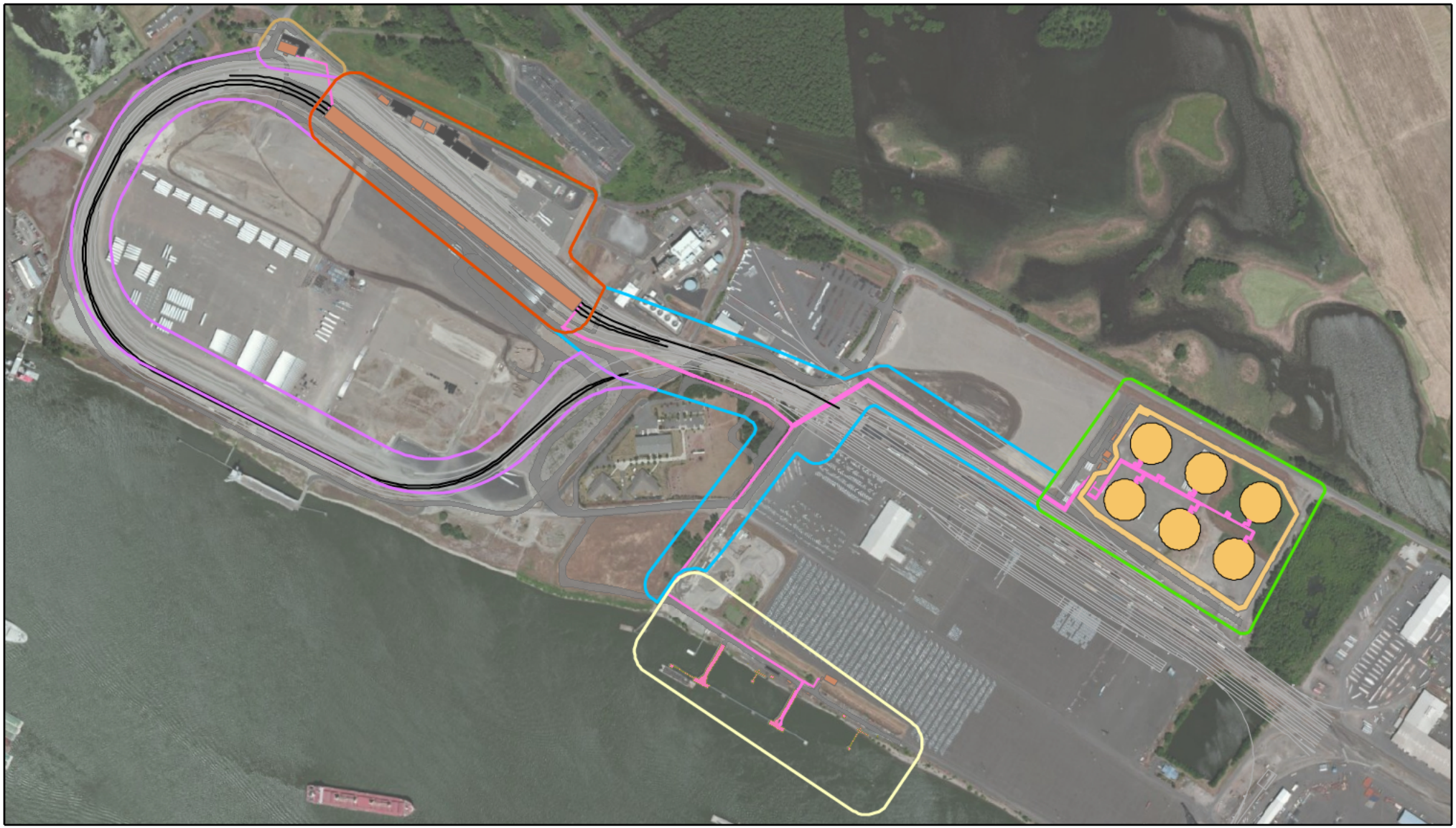

Figure 2 - Site Plan

VANCOUVER ENERGY

Tesoro Savage Petroleum Terminal LLC

Proposed Project Facilities

- Containment Berm
- Transfer Pipeline
- Rail
- Storage Tank
- Parking
- Roads
- Building
- Marine Terminal

TSPT Improvement Areas

- 200 - Unloading and Office
- 300 - Storage
- 400 - Marine Terminal
- 500 - Transfer Pipelines
- 600 - West Boiler
- Rail Infrastructure

0 250 500 1,000
Feet

N

Date: February 2015

Map Notes: Aerial photo dated July 2010, courtesy of ESRI World Imagery service

1.4 Existing Conditions

A thorough description of the existing conditions within and adjacent to the project area is included below. The existing condition descriptions are provided to delineate the geographic and natural resource elements of the Facility. Descriptions of the existing conditions include the following elements.

- Stormwater Conveyance and Treatment Systems
- Sanitary Sewer Conveyance and Treatment Systems
- Surface Water Bodies
- Floodplains
- Wetlands
- Soil Evaluations
- Past Site Remediation
- Climate

1.4.1 Stormwater Conveyance and Treatment Systems

The existing site is located in three distinct primary drainage areas which are segregated by topography. Stormwater within these areas discharges to different locations. Table 3 shows which areas of the Facility are located within each drainage area.

Table 3. Drainage and Facility Areas

Drainage Area	Facility Areas
Terminal 4	Area 300 – Storage Area 500 – Transfer Pipelines
Terminal 5	Area 200 – Unloading and Office Area 600 – West Boiler Rail Improvements
Marine Terminal	Area 400 – Marine Terminal Area 500 – Transfer Pipelines

For the purpose of this section, the three drainage areas are discussed separately. The corresponding figures indicate which area of the Facility is located within each drainage area and how the Facility area relates to the existing collection, treatment, and detention systems.

A detailed description of the three drainage areas (Terminal 4, Terminal 5, and the Marine Terminal) is provided in the following sections. The designations are intended to delineate the portion of the site described and its respective downstream drainage system. According to the port, the described Marine Terminal is technically part of Terminal 4; however, it has a distinct and separate stormwater system and, for that reason, is segregated as its own descriptive area.

1.4.1.1 Terminal 4

The Terminal 4 drainage system comprises approximately 250 acres of industrial land. A system of inlets and conveyance pipelines collects stormwater from the drainage area and discharges the stormwater to the Terminal 4 water quality pond, as shown in Figure 3. The water quality pond was modified recently to increase detention time and vegetative plantings were added for shading and bio-uptake. From the water quality pond, the stormwater is routed to the southeast where it is discharged through an existing outfall to the Columbia River under an Industrial Stormwater General Permit (WAR000424) held by the Port.

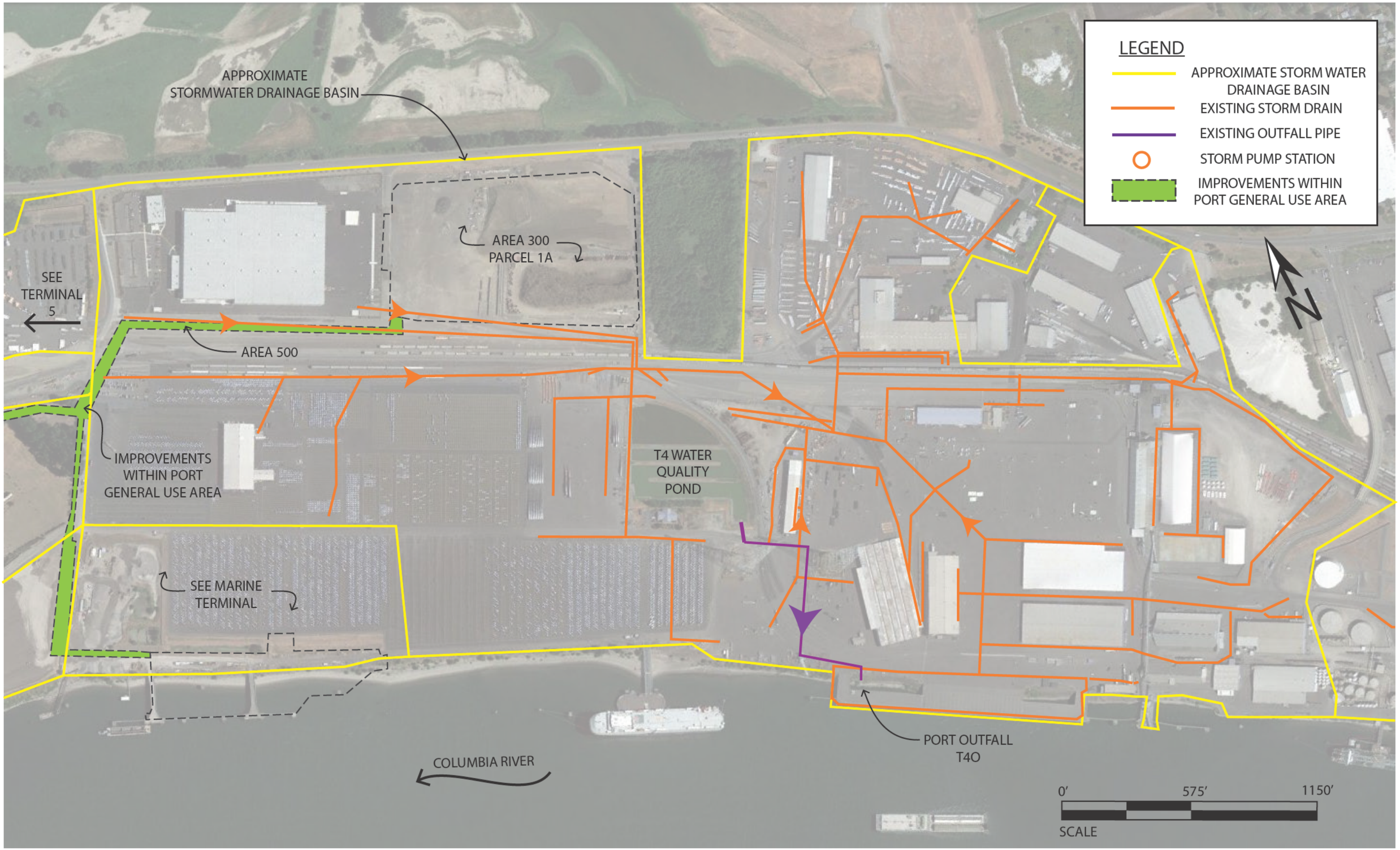
LEGEND
APPROXIMATE STORM WATER DRAINAGE BASIN
EXISTING STORM DRAIN
EXISTING OUTFALL PIPE
STORM PUMP STATION
IMPROVEMENTS WITHIN PORT GENERAL USE AREA
APPROXIMATE STORMWATER DRAINAGE BASIN
AREA 300 PARCEL 1A
SEE TERMINAL 5
AREA 500
IMPROVEMENTS WITHIN PORT GENERAL USE AREA
T4 WATER QUALITY POND
SEE MARINE TERMINAL
PORT OUTFALL T4O
COLUMBIA RIVER
N
0'
575'
1150'
SCALE

This page left blank intentionally.

Facility elements located within the Terminal 4 drainage area are Area 300 – Storage, and a portion of Area 500 – Transfer Pipelines. There are two parallel stormwater systems running east-west along the south side of Area 300 and the portion of Area 500. The southern pipeline was installed for stormwater from the port's general use area and rail corridor. The northern pipeline was installed for the use of port tenants. Farwest Steel is the only current discharger into this system. Upon completion of the Facility, stormwater from Area 300 will be discharged into the northern pipeline. Area 500 is located within the general use area and runoff will continue to the port's stormwater system.

Both pipelines currently discharge to the Terminal 4 water quality pond. The northern pipeline will be modified to bypass the Terminal 4 water quality pond to separate tenant stormwater from Port stormwater. This project is currently being constructed and will occur prior to construction of the Facility. The bypass pipeline will reconnect to the existing outfall pipeline to the Columbia River.

1.4.1.2 Terminal 5

The Terminal 5 drainage system was installed as part of the remediation and decommissioning of the former Evergreen/ALCOA aluminum smelter, construction of the West Vancouver Freight Access (WVFA) project, and the Terminal 5 laydown project. The drainage system was designed and analyzed as part of the analysis for the construction of the WVFA project. A copy of the report is attached in Appendix D.

The Terminal 5 drainage area consists of approximately 91 acres of industrial land that is collected through inlets and conveyed to a common stormwater pump station as shown in Figure 4. During normal operations, stormwater from the drainage area is pumped to two treatment lagoons that were installed to treat both process water and stormwater from the Evergreen/ALCOA plant. The treatment lagoons are capable of providing final treatment of stormwater prior to discharge to the Columbia River through an existing outfall under a Western Washington Phase II Municipal Stormwater Permit WAR045201 held by the Port. The stormwater system includes provision for a high flow or pump station failure to overflow to the Columbia River.

On the Facility site, three legs of the existing stormwater system run north/south through the proposed rail unloading facility. The west lateral extends towards Old Lower River Road for future use, the middle lateral collects runoff from atop the Vanexco Cap, and the east lateral collects stormwater from a portion of Old Lower River Road and the NGL Supply propane terminal. The middle lateral only conveys stormwater that collects from a liner system installed above the contaminated material; stormwater from this area is only exposed to existing general use industrial yard areas and a portion of the rail transportation corridor. The Facility areas constructed on Terminal 5 include Area 200, Area 600, and a portion of Area 500.

This page left blank intentionally.

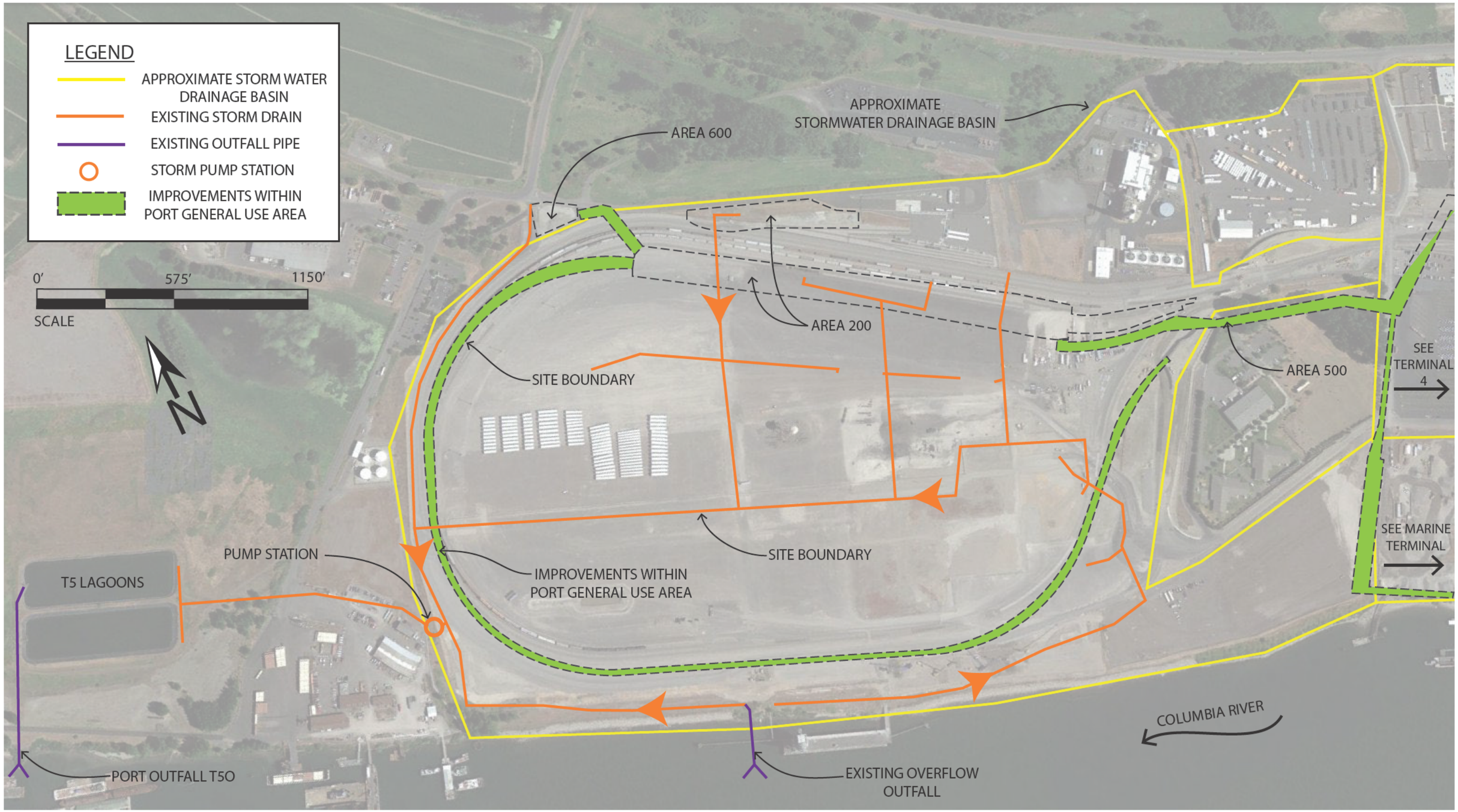
LEGEND
APPROXIMATE STORM WATER DRAINAGE BASIN
EXISTING STORM DRAIN
EXISTING OUTFALL PIPE
STORM PUMP STATION
IMPROVEMENTS WITHIN PORT GENERAL USE AREA
0'
575'
1150'
SCALE
N
AREA 600
APPROXIMATE STORMWATER DRAINAGE BASIN
AREA 200
SITE BOUNDARY
AREA 500
SEE TERMINAL 4
SITE BOUNDARY
SEE MARINE TERMINAL
PUMP STATION
IMPROVEMENTS WITHIN PORT GENERAL USE AREA
T5 LAGOONS
COLUMBIA RIVER
PORT OUTFALL T5O
EXISTING OVERFLOW OUTFALL

This page left blank intentionally.

1.4.1.3 Marine Terminal

The Marine Terminal is located within Terminal 4, however, stormwater in this area is a separate stormwater system. The system was installed with Phase I of the Columbia Gateway project in 1995. The stormwater serves three tenant areas including a gravel barge unloading operated by CalPortland/Glacier Northwest, an Auto Terminal consisting of first point of rest unloading and service facility for Subaru, and the proposed Facility infrastructure for the Marine Terminal. In total, the drainage area consists of approximately 25 acres. Stormwater is collected through a series of inlets and conveyance pipes from which it is discharged to the treatment and infiltration swales except for the existing Area 400 - Marine Terminal area, which sheet flows directly into the infiltration swales.

Stormwater is diverted to a number of biofiltration swales for basic water quality treatment and then flows into two hydraulically connected infiltration swales. Figure 5 shows the general arrangement of the collection and treatment facilities located at the Marine Terminal.

Modifications to the existing collection and treatment systems will occur within the Marine Terminal drainage area. A detailed explanation of modifications to the existing system is included in section 7.2.3.

1.4.2 Sewer Conveyance and Treatment Systems

The existing facility is located such that there are three distinct sewer service areas. The sewer conveyance systems, which are owned and operated by the City of Vancouver, direct flows to a pump station located immediately southeast of the corner of Area 300.

For the purpose of this section, each of the facility areas and the existing sewer connection description is provided below.

1.4.2.1 Area 200 Unloading and Office

Domestic wastewater generated by the employees and visitors will be generated at the administration area of Area 200. Employees working in other areas of the facility will also use the shower/change room facilities located here. Boiler blowdown (process wastewater) from Area 600 will be pumped to this area for on-site oil-water separation and discharge to the sewer. This process wastewater and domestic sewage from the administration and change/room will be commingled at a monitoring manhole and discharged to the City's system.

The proposed service lateral will connect to the City's gravity sewer located on Old NW Lower River Road. Manhole #21025 is the headwaters of this 18-inch gravity line that flows to the southeast. The manhole also receives discharges from a private 6-inch high-density polyethylene (HDPE) forcemain that was installed by the Port for future Terminal 5 tenants. The 18-inch gravity sewer line was constructed in 2010 with the original Port of Vancouver Terminal 5 Industrial Improvements.

1.4.2.2 Area 300 Storage

The primary source of sanitary sewer in Area 300 is contributed by a sump drain installed within the transfer pump basin. This drain includes a normally closed valve and oil-water separator for treatment prior to release to the City's system. The 3,200-square-foot basin will contribute regular flow to the City's system resulting from directly contributing rainfall.

The lateral from Area 300 will connect to the City's gravity sewer located immediately south of Area 300 and north of the rail corridor. This sewer was constructed in 2012 concurrently with the Port of Vancouver's West Vancouver Freight Access Project #9. This 18-inch gravity sewer line extends west and is part of the same system that connects to Area 200. It eventually discharges east to the City's pump station located southeast of Area 300.

Provisions are included in the design for future sanitary sewer connection for a possible restroom to be constructed within the storage building. A private sanitary sewer lateral is proposed to be stubbed to the building for possible future domestic sewage use.

This page left blank intentionally.

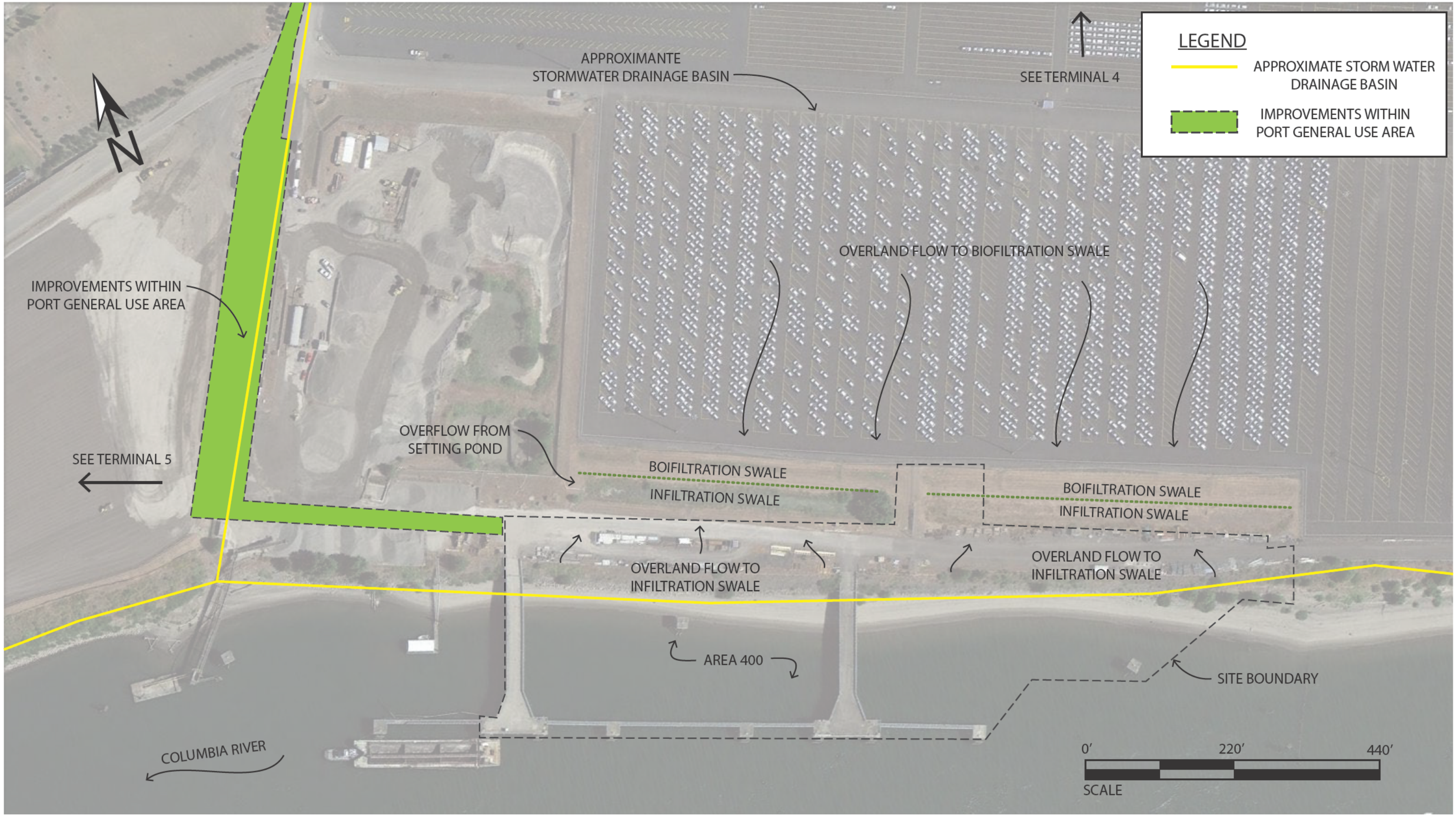
LEGEND
APPROXIMATE STORM WATER DRAINAGE BASIN
IMPROVEMENTS WITHIN PORT GENERAL USE AREA
N
APPROXIMANTE STORMWATER DRAINAGE BASIN
SEE TERMINAL 4
OVERLAND FLOW TO BIOFILTRATION SWALE
IMPROVEMENTS WITHIN PORT GENERAL USE AREA
OVERFLOW FROM SETTING POND
SEE TERMINAL 5
BOIFILTRATION SWALE
INFILTRATION SWALE
BOIFILTRATION SWALE
INFILTRATION SWALE
OVERLAND FLOW TO INFILTRATION SWALE
OVERLAND FLOW TO INFILTRATION SWALE
AREA 400
SITE BOUNDARY
COLUMBIA RIVER
0'
220'
440'
SCALE

This page left blank intentionally.

1.4.2.3 Area 400 Marine Terminal

Area 400 includes a control building for use during the loading of Marine Vessels. The facility as designed is planning to use portable restrooms for employee use. No connection to sanitary sewer is proposed from this area.

The nearest public gravity sewer is located north of the site at the intersection of Gateway Avenue and Harborside Drive. The existing manhole (#14411) received private pressure sewer from the west. The gravity sewer flows southeast within an existing public sewer easement. This sewer was constructed in 1999 with the Clark County Jail Work Center.

1.4.2.4 Area 500 Transfer Pipelines

There are no features that generate wastewater.

1.4.2.5 Area 600 West Boiler

Area 600 contributes process wastewater consisting of boiler blowdown. Boiler blowdown will be temperature treated using a heat exchanger and chemical neutralization if needed. Effluent monitoring will be completed in accordance with discharge permit requirements to demonstrate compliance with the City's pretreatment standards. A downstream oil-water separator is also included in the design prior to discharge. Process wastewater from this area is discharged to the gravity sewer described in Area 200 above.

1.4.2.6 Treatment

Sewer flows generated by the Facility will flow approximately 1 mile to the City's Westside Water Reclamation Facility through the City's existing collection system. The estimated total flow from the project to the treatment facility is approximately 24,000 gallons per day (gpd) average with a maximum of 36,000 gpd. According to the sewer availability letter provided by the City, "The existing gravity pipes, pump station and reclamation facilities have adequate hydraulic and treatment capacity to accommodate these requested flows." A copy of the sewer availability letter is provided in Appendix M.

1.4.3 Surface Water Bodies

The project site is located immediately north of the Columbia River and portions of the project site are bordered by wetlands. A discussion of the wetlands follows in section 1.4.5. No streams or open surface water features are located within the areas of the site development.

The project site is located within the Salmon-Washougal Watershed (WRIA 28) located in southwest Washington. The nearest surface water feature is the Columbia River. The river drains an estimated basin of roughly 258,000 square miles and is approximately 1,243 miles long. The project site is located at approximately RM 104. The Columbia River eventually discharges to the Pacific Ocean near Astoria, Oregon.

A description of the water quality of the Columbia River is included in section 11.2.

The average water level in the Columbia River is usually 7 to 8 feet (National Geodetic Vertical Datum [NGVD] 29) during the winter. Flood stage is considered to occur at 16 feet when low level flooding begins to occur. A detailed discussion of the floodplain limits follows as section 1.4.4. The flood of record is a 1996 event when the river crested at 27.2 feet. This is not the highest recorded event, which occurred on 13 June 1948 with a crest of 31.00 feet.

1.4.4 Floodplains

The local floodplain within the project vicinity is defined by the Columbia River. This lower portion of the Columbia River is generally regulated by the upstream Bonneville Dam. Flooding in and adjacent to the site from the north watershed, including Vancouver Lake, is hydraulically connected directly to the elevation of the water surface of the Columbia River.

This site area has been extensively studied for floodplain and flood impacts. The most recent analysis conducted by the Federal Emergency Management Agency (FEMA) developed Flood Insurance Rate Maps (FIRM) issued on 5 September 2012. The base flood elevation and limits are shown on the FIRM maps contained in Appendix B. The FEMA FIRMs that cover the project site are Map Item ID Nos. 53011C0363D and 553011C0364D.

Table 4 summarizes the floodplain elevations discussed below in the different vertical datums. National American Vertical Datum (NAVD) 88 is the vertical datum used by FEMA in the FIRM mapping, while NGVD 1929 is the datum used by the Port and the Facility. The NGVD 1929 datum is also the datum referenced in the historical flood record maintained by Clark County. The Columbia River Datum (CRD) is used by river users and is based on relative elevations to water levels.

Table 4. Floodplains

Floodplain	NAVD 88	NGVD 1929	CRD
100-Year	30.0	26.9	25.3
500-Year	33.7	30.6	29.0

1.4.4.1 100-Year Floodplain

The Base Flood Elevation (BFE) is identified in the FIRM for the 100-year floodplain as 30 feet based on the NAVD 88 datum. The limits of the 100-year floodplain are classified in the FIRMs as Zone AE, which indicates that there is a 1 percent annual chance flood, with the BFE being the water surface elevation of the 1 percent annual chance flood.

The 100-year floodplain is generally located along the top of the river bank. The FIRMs show an isolated component of the 100-year floodplain encroaching into Area 300 on Terminal 4, and Area 600 at Terminal 5. The 2012 FIRM maps do not reflect the grading and filling of these sites that occurred prior to the adoption of the FIRMs. Because of prior filling and grading completed by the Port, the existing ground elevation is outside of the 100-year floodplain at approximately Elevation 32 NGVD 1929. A detailed description of the prior authorizations for filling this area is included in the ASC.

1.4.4.2 500-Year Floodplain

The 500-year floodplain is identified in the FIRM as Zone X with the black dotted hatch pattern. Zone X is an area with a 0.2 percent annual chance flood. The 0.2 percent annual chance flood is listed with average depth of less than 1 foot.

With very little exception, the 500-year floodplain extends across the entire project site. The rough grading completed since the adoption of the 2012 FIRMs does not affect the limits of the 500-year floodplain.

1.4.5 Wetlands

The National Wetland Inventory map for Vancouver (U.S. Fish and Wildlife Service 1989) indicates the presence of numerous wetlands within the project vicinity. Before development, nine wetlands, totaling approximately 16 acres in size, were present on this site, but they were all filled through permitted actions that began in 1996.

There are two wetland mitigation sites in the vicinity of the project site. The approximately 7.9-acre Parcel 1A (east of Area 300) wetland mitigation site, located immediately east of Area 300, was established in 1994. This is a depressional, palustrine forested wetland vegetated with mature black cottonwood trees and a variety of native shrubs and herbaceous species. Stormwater from Area 300 or Area 500 will not discharge to any existing wetlands. The wetlands are not hydraulically connected to any of the project elements.

A second wetland mitigation site is an approximately 16.4-acre mitigation site situated immediately north of the existing Terminal 5 site. The wetland was established in 2000 for impacts associated with the initial development of Parcel 1A. The site is currently a mosaic of forested, scrub-shrub, and emergent vegetation. Stormwater from the Facility will not discharge to Parcel 2 wetlands.

The most significant complex of wetlands in the general vicinity is associated with the southern end of Vancouver Lake. The wetlands in this area are a mosaic of emergent, scrub-shrub, and forested wetlands that are hydraulically connected to Vancouver Lake and, by extension, the Columbia River. These wetlands provide high quality seasonally inundated and tidally influenced habitats that most closely resemble the original hydrologic and wetland habitat functions of the Vancouver Lake Lowlands.

1.4.6 Soils Evaluation

Geotechnical Resources, Inc. (GRI) performed a geotechnical investigations for the proposed Facility. The geotechnical investigations are attached as Appendix I. Detailed soil maps are included in Appendix I.

1.4.7 Past Site Remediation

Terminal 5 is the former location of the Evergreen/ALCOA aluminum smelter, which operated until 2000. Industrial and solid wastes from the construction and operation of the aluminum smelter were stored in waste piles and consolidated in landfills on site over the years. Hazardous contaminants in these wastes include petroleum hydrocarbons, polychlorinated biphenyls (PCBs), cyanide, fluoride, trichloroethylene (TCE), low-level organic chemicals, and metals. Evergreen and ALCOA completed site remediation and facility decommissioning under Consent Decree No. 09-2-00247-2 and Enforcement Order 4931 with Ecology. Efforts included removing structures and foundations to a depth of approximately 4 feet and the site soil and sediment with concentrations of chemicals of concern above the cleanup levels established by the consent decree.

Five cap locations subject to environmental restrictive covenants are located within the boundary of the Facility. The Terminal 5 area also includes a groundwater restrictive covenant. A contaminated media management plan (CMMP) has been prepared and submitted under separate cover containing detailed descriptions of the landfill areas, caps, and the contaminates of concern. These areas are shown in Figure 6.

Copyright © BergerABAM. All Rights Reserved.

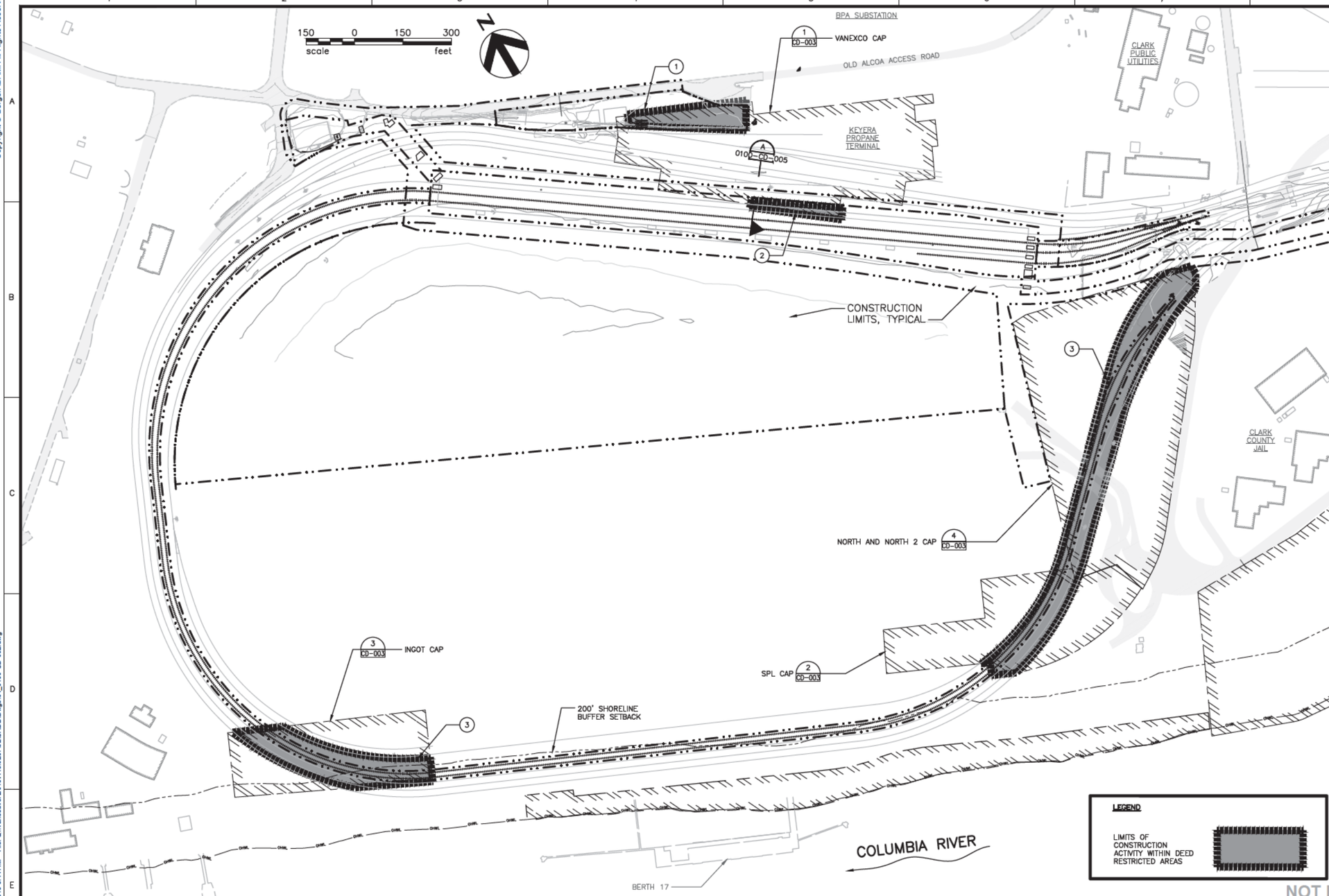

GENERAL NOTES:

1. CONTRACTOR'S ACTIVITY SHALL STRICTLY COMPLY WITH ALL PERMITTED CONDITIONS OF APPROVAL.
2. EXCAVATIONS AND GROUND DISTURBING ACTIVITIES WITH DEED RESTRICTED AREAS REQUIRES NOTIFICATION TO THE WASHINGTON DEPARTMENT OF ECOLOGY AND COMPLIANCE WITH PORT OF VANCOUVER PROTOCOLS AND ADDITIONAL REQUIREMENTS PROVIDED BY THE WA DEPARTMENT OF ECOLOGY.
3. SPECIFIC LIMITS FOR THE EAST LANDFILL LIMITS ARE PROVIDED BASED UPON PRIOR SURVEY'S CONDUCTED BY HDJ DESIGN GROUP. WORK LIMIT SHALL ENCROACH UPON THE BOUNDARY OF THE EAST LANDFILL.
4. WHERE KNOWN, ADDITIONAL AREAS OF CONCERN AND POSSIBLE CONTAMINATED MEDIA LOCATIONS HAVE BEEN GENERALLY DEPICTED. CONTRACTOR SHALL COORDINATE FULLY WITH PORT OF VANCOUVER ENVIRONMENTAL STAFF AND INSPECTORS FOR MONITORING AND TESTING OF EXCAVATED MEDIA FOR POSSIBLE CONTAMINATES. PORTIONS OF AREA 200 AND AREA 500 ARE SPECIFICALLY IDENTIFIED WHERE CONTAMINATION IS LIKELY TO BE ENCOUNTERED DURING EXCAVATIONS.
5. IF MEDIA INCLUDING SOILS, OR GROUNDWATER ARE ENCOUNTERED THAT INDICATE POSSIBLE CONTAMINATION, CONTRACTOR SHALL NOTIFY PORT OF VANCOUVER IMMEDIATELY PRIOR TO PROCEEDING. SIGNS OF CONTAMINATION INCLUDE UNUSUALLY DARK SOIL AND ODORS.
6. IN AREAS OF CONCERN EXCAVATED MATERIAL SHALL BE PLACED IN SEALED WATER-TIGHT CONTAINERS OR LINED STAGING AREAS IMMEDIATELY ADJACENT TO THE WORK AREA FOR TESTING AND CLASSIFICATION OF MATERIAL PRIOR TO HAUL OFF.

CONTAMINATED MEDIA NOTES:

1. CONSTRUCTION ACTIVITIES WITHIN THIS PORTION OF THE VANEXCO CAP WILL BE LIMITED TO GROUND DISTURBANCES ABOVE THE EXISTING CONCRETE CAP. SOME MINOR EXPOSURE OF THE CONCRETE SURFACE MAY OCCUR IN LOCALIZED AREAS. NO WORK WITHIN THIS AREA WILL REMOVE OR PENETRATE PORTIONS OF THE CAP.
2. CONSTRUCTION ACTIVITIES WITHIN THIS PORTION OF THE VANEXCO CAP WILL RESULT IN MODIFICATION OF THE UNDERDRAIN SYSTEM AND HDPE LINER. DISCHARGES FROM THE UNDERDRAIN SYSTEM WILL BE RE-ROUTED TO AVOID CONFLICTS WITH THE PROPOSED RAIL UNLOADING BUILDING FOUNDATIONS AND CONTAINMENT TRENCHES, SEE DWG 0100-CD-003 FOR LINER PENETRATION DETAIL, AND SHEETS 0100-CD-007 & 0100-CD-008 FOR NEW STORMWATER DETAILS. LINER WILL BE EXTENDED TO AND TIED INTO THE GRADE BEAMS OF THE RAIL UNLOADING BUILDING FOUNDATION SEE DWG 0100-CD-003 FOR DETAILS. FOUNDATIONS OF THE RAIL UNLOADING BUILDING WITHIN THE EXISTING CAP AREA WILL BE LIMITED TO SHALLOW SPREAD FOOTINGS TO LIMIT EXCAVATION ACTIVITIES. CONSTRUCTION OF RAIL UNLOADING BUILDING CONSISTS OF FULLY IMPERVIOUS ROOF WITH CAST-IN-PLACE CONCRETE SURFACING WITH FLOOR DRAINS. ALL RAINWATER WILL BE COLLECTED AND DIVERTED, THEREBY EXCLUDING SURFACE WATER FROM ENTERING CAP AREA.
3. CONSTRUCTION WITHIN THE INGOT CAP, SPL CAP, AND NORTH AND NORTH 2 CAP AREAS ARE LIMITED TO RAIL IMPROVEMENTS ONLY. RAIL LINES TO BE UNDER TSJV CONTROL ARE PERMITTED UNDER EFSEC APPLICATION. CONSTRUCTION DRAWINGS, DETAILS, AND CONSTRUCTION ADMINISTRATION FOR THESE IMPROVEMENTS WILL BE COMPLETED BY THE PORT OF VANCOUVER AS DISCUSSED IN THE LEASE AGREEMENT AS PART OF THE PORTS WEST VANCOUVER FREIGHT ACCESS PROJECT.
4. CONSTRUCTION WITHIN THE EAST LANDFILL CAP AREA CONSISTS OF GRADING A SUITABLE LEVEL BENCH WITHIN THE DEED RESTRICTED AREA TO CONSTRUCT FOUNDATIONS FOR THE CRUDE OIL PIPELINE. CONSTRUCTION ACTIVITIES SHALL NOT ENCROACH UPON THE LANDFILL AREA ITSELF AND SHALL REMAIN EAST OF THE HIGH VISIBILITY FENCING DELINEATED ON THE EROSION CONTROL PLANS.
5. PORT OF VANCOUVER IDENTIFIED POCKETS OF CONTAMINATED GROUNDWATER AND SOIL WITHIN THIS AREA. CONTRACTOR SHALL BE ADVISED THAT WORK WITHIN THIS PORTION OF THE PIPELINE ALIGNMENT WILL REQUIRE TESTING OF EXCAVATED MATERIAL PRIOR TO DISPOSAL.

PERMIT SET
NOT FOR CONSTRUCTION

NO.	DATE	REVISION	BY	CK'D	APP

BergerABAM
700 NE Multnomah Street, Suite 900
Portland, Oregon 97232-4189
(503) 872-4100 FAX: (503) 872-4101

VANCOUVER ENERGY
Tesoro Savage Petroleum Terminal LLC

PROJECT: VANCOUVER ENERGY
PORT OF VANCOUVER, WASHINGTON

DESCRIPTION: CONTAMINATED MEDIA LOCATIONS – 1

DESIGN:	DRS	START DATE:	2/6/2015	SCALE:	AS SHOWN
DRAWN:	TNP	PRINT DATE:	2/6/2015	PROJECT MANAGER:	SAVAGE_PM
CHECKED:	MCH	APPROVED:	SA	SIZE:	24X36

DRAWING NUMBER: 0100-CD-002
SHEET: 1/1
REV.

Last Saved by: Tony.pritchett on: Feb 6, 2015 8:44 AM File: Q:\Vancouver\2013\A13.0267\02\CAD\Dwgs\04_0100-CD-002.dwg

This page left blank intentionally.

Copyright © BergerABAM. All Rights Reserved.

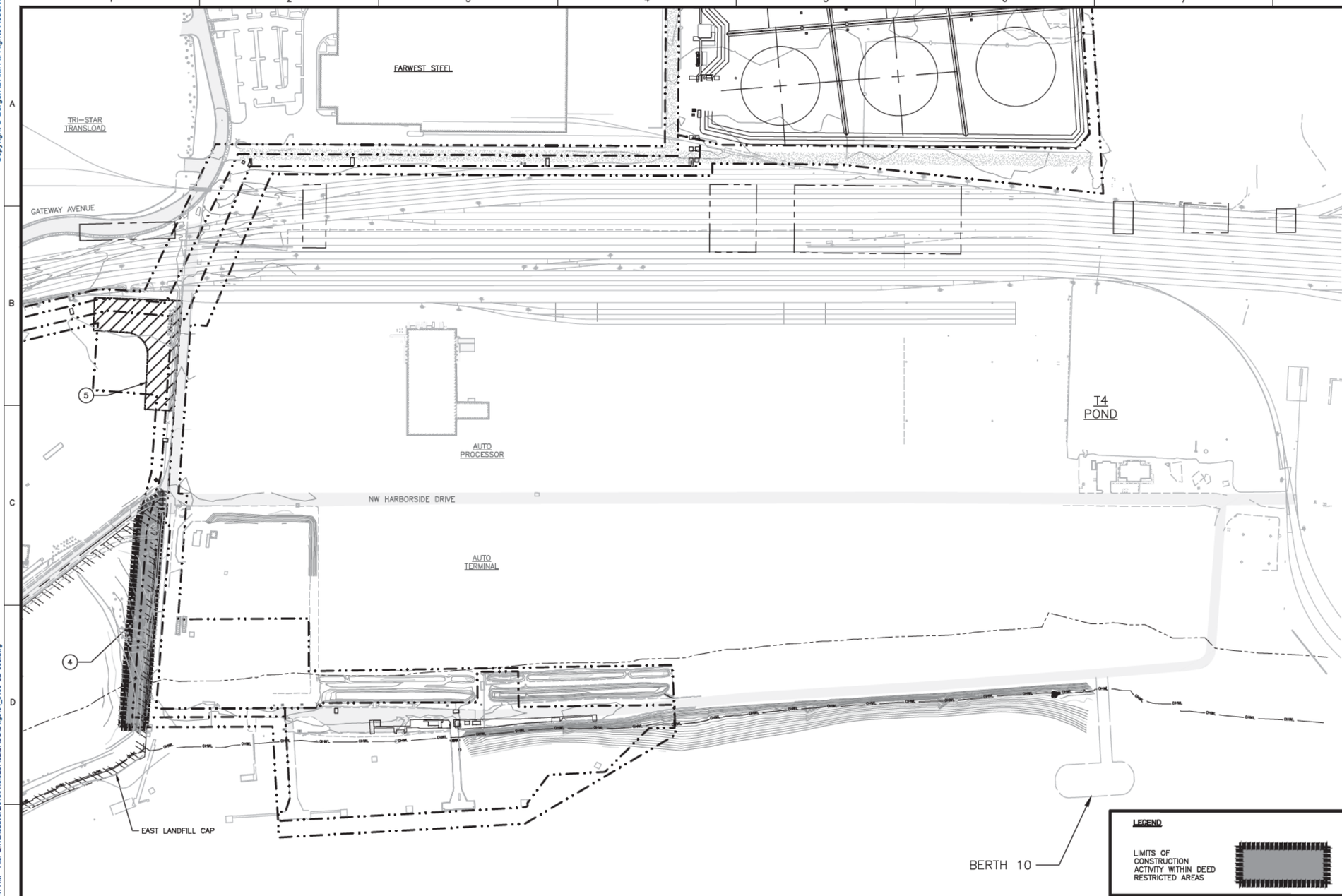

GENERAL NOTES:

1. CONTRACTOR'S ACTIVITY SHALL STRICTLY COMPLY WITH ALL PERMITTED CONDITIONS OF APPROVAL.
2. EXCAVATIONS AND GROUND DISTURBING ACTIVITIES WITH DEED RESTRICTED AREAS REQUIRES NOTIFICATION TO THE WASHINGTON DEPARTMENT OF ECOLOGY AND COMPLIANCE WITH PORT OF VANCOUVER PROTOCOLS AND ADDITIONAL REQUIREMENTS PROVIDED BY THE WA DEPARTMENT OF ECOLOGY.
3. SPECIFIC LIMITS FOR THE EAST LANDFILL LIMITS ARE PROVIDED BASED UPON PRIOR SURVEY'S CONDUCTED BY HDJ DESIGN GROUP. WORK LIMIT SHALL ENCROACH UPON THE BOUNDARY OF THE EAST LANDFILL.
4. WHERE KNOWN, ADDITIONAL AREAS OF CONCERN AND POSSIBLE CONTAMINATED MEDIA LOCATIONS HAVE BEEN GENERALLY DEPICTED. CONTRACTOR SHALL COORDINATE FULLY WITH PORT OF VANCOUVER ENVIRONMENTAL STAFF AND INSPECTORS FOR MONITORING AND TESTING OF EXCAVATED MEDIA FOR POSSIBLE CONTAMINATES. PORTIONS OF AREA 200 AND AREA 500 ARE SPECIFICALLY IDENTIFIED WHERE CONTAMINATION IS LIKELY TO BE ENCOUNTERED DURING EXCAVATIONS.
5. IF MEDIA INCLUDING SOILS, OR GROUNDWATER ARE ENCOUNTERED THAT INDICATE POSSIBLE CONTAMINATION, CONTRACTOR SHALL NOTIFY PORT OF VANCOUVER IMMEDIATELY PRIOR TO PROCEEDING. SIGNS OF CONTAMINATION INCLUDE UNUSUALLY DARK SOIL AND ODORS.
6. IN AREAS OF CONCERN EXCAVATED MATERIAL SHALL BE PLACED IN SEALED WATER-TIGHT CONTAINERS OR LINED STAGING AREAS IMMEDIATELY ADJACENT TO THE WORK AREA FOR TESTING AND CLASSIFICATION OF MATERIAL PRIOR TO HAUL OFF.

CONTAMINATED MEDIA NOTES:

1. CONSTRUCTION ACTIVITIES WITHIN THIS PORTION OF THE VANEXCO CAP WILL BE LIMITED TO GROUND DISTURBANCES ABOVE THE EXISTING CONCRETE CAP. SOME MINOR EXPOSURE OF THE CONCRETE SURFACE MAY OCCUR IN LOCALIZED AREAS. NO WORK WITHIN THIS AREA WILL REMOVE OR PENETRATE PORTIONS OF THE CAP.

2. CONSTRUCTION ACTIVITIES WITHIN THIS PORTION OF THE VANEXCO CAP WILL RESULT IN MODIFICATION OF THE UNDERDRAIN SYSTEM AND HDPE LINER. DISCHARGES FROM THE UNDERDRAIN SYSTEM WILL BE RE-ROUTED TO AVOID CONFLICTS WITH THE PROPOSED RAIL UNLOADING BUILDING FOUNDATIONS AND CONTAINMENT TRENCHES, SEE DWG 0100-CD-003 FOR LINER PENETRATION DETAIL, AND SHEETS 0100-CD-007 & 0100-CD-008 FOR NEW STORMWATER DETAILS. LINER WILL BE EXTENDED TO AND TIED INTO THE GRADE BEAMS OF THE RAIL UNLOADING BUILDING FOUNDATION SEE DWG 0100-CD-003 FOR DETAILS. FOUNDATIONS OF THE RAIL UNLOADING BUILDING WITHIN THE EXISTING CAP AREA WILL BE LIMITED TO SHALLOW SPREAD FOOTINGS TO LIMIT EXCAVATION ACTIVITIES. CONSTRUCTION OF RAIL UNLOADING BUILDING CONSISTS OF FULLY IMPERVIOUS ROOF WITH CAST-IN-PLACE CONCRETE SURFACING WITH FLOOR DRAINS. ALL RAINWATER WILL BE COLLECTED AND DIVERTED, THEREBY EXCLUDING SURFACE WATER FROM ENTERING CAP AREA.

3. CONSTRUCTION WITHIN THE INGOT CAP, SPL CAP, AND NORTH AND NORTH 2 CAP AREAS ARE LIMITED TO RAIL IMPROVEMENTS ONLY. RAIL LINES TO BE UNDER TSJV CONTROL ARE PERMITTED UNDER EFSEC APPLICATION. CONSTRUCTION DRAWINGS, DETAILS, AND CONSTRUCTION ADMINISTRATION FOR THESE IMPROVEMENTS WILL BE COMPLETED BY THE PORT OF VANCOUVER AS DISCUSSED IN THE LEASE AGREEMENT AS PART OF THE PORTS WEST VANCOUVER FREIGHT ACCESS PROJECT.

4. CONSTRUCTION WITHIN THE EAST LANDFILL CAP AREA CONSISTS OF GRADING A SUITABLE LEVEL BENCH WITHIN THE DEED RESTRICTED AREA TO CONSTRUCT FOUNDATIONS FOR THE CRUDE OIL PIPELINE. CONSTRUCTION ACTIVITIES SHALL NOT ENCROACH UPON THE LANDFILL AREA ITSELF AND SHALL REMAIN EAST OF THE HIGH VISIBILITY FENCING DELINEATED ON THE EROSION CONTROL PLANS.

5. PORT OF VANCOUVER IDENTIFIED POCKETS OF CONTAMINATED GROUNDWATER AND SOIL WITHIN THIS AREA. CONTRACTOR SHALL BE ADVISED THAT WORK WITHIN THIS PORTION OF THE PIPELINE ALIGNMENT WILL REQUIRE TESTING OF EXCAVATED MATERIAL PRIOR TO DISPOSAL.

LEGEND

LIMITS OF CONSTRUCTION ACTIVITY WITHIN DEED RESTRICTED AREAS

PERMIT SET
NOT FOR CONSTRUCTION

NO.	DATE	REVISION	BY	CK'D	APP

BergerABAM
700 NE Multnomah Street, Suite 900
Portland, Oregon 97232-4189
(503) 872-4100 FAX: (503) 872-4101

VANCOUVER ENERGY
Tesoro Savage Petroleum Terminal LLC

PROJECT: VANCOUVER ENERGY
PORT OF VANCOUVER, WASHINGTON

DESCRIPTION: CONTAMINATED MEDIA LOCATIONS – 2

DESIGN:	DRS	START DATE:	2/6/2015	SCALE:	AS SHOWN
DRAWN:	TNP	PRINT DATE:	2/6/2015	PROJECT MANAGER:	SAVAGE_PM
CHECKED:	MCH	APPROVED:	SA	SIZE:	24X36

DRAWING NUMBER: 0100-CD-003
SHEET: 1/1
REV.

Last Saved by: Tony.pritchett on: Feb 6, 2015 8:47 AM File: Q:\Vancouver\2013\A13.0.267\02\CAD\Dwgs\04_0100-CD-003.dwg

This page left blank intentionally.

Operationally, the project will not impact the industrial waste areas. Construction of the Facility will require slight modifications to the Vanexco Cap liner system installed with the WVFA project. Additionally, rail improvements will be constructed on top of the North/North2, SPL, and Ingot caps. These construction impacts are discussed in detail in the Facility's construction SWPPP.

The Facility will reconstruct the downstream discharges connected to the Vanexco Cap liner system, and details of this construction are included in Area 200 (see section 5.2.2).

1.4.8 Climate

The climate of the city is predominantly temperate, characterized by wet, mild winters and dry warm summers. The climate is influenced by the relative proximity of the Pacific Ocean and the Cascade and Coast ranges of Oregon and Washington. Temperature and precipitation measurement records from the "Vancouver 4 NNE" agricultural meteorological station were accessed to analyze the climate at the project site. The station is located approximately 4 miles northeast of the project site and has been collecting measurements since 1856. The maximum temperature ever recorded at the site was 106°F on 30 July 2009 and minimum temperature recorded was -8.0°F in 1909. The site averages about 39.6 inches of rainfall and 6.5 inches of snow a year, with most of the precipitation occurring during the winter months. Prevailing winds are from the west-northwest.

Isopluvial mapping of Washington was prepared by the National Oceanic and Atmospheric Administration. Table 5 shows estimates of precipitation amounts for the following design storms as shown in Volume IX of the NOAA Atlas 2 and attached in Appendix A.

Table 5. Design Storm Rainfall Intensity

Design Storm	Precipitation (in)
2-Year, 24-Hour	2.4
5-Year, 24-Hour	2.7
10-Year, 24-Hour	3.2
25-Year, 24-Hour	3.6
50-Year, 24-Hour	4.0
100-Year, 24-Hour	4.3

Precipitation amounts shown in Table 5 are used in the conveyance system model which uses the SCS Type 1A rainfall distribution hydrograph to determine the peak flow rates for the design storm. The Western Washington Hydrology Model (WWHM) used catalogued map information that is automatically selected when the project site is selected. The gauge used in the WWHM is "Portland" with a precipitation factor of 0.933.

1.5 Project Overview

The project will construct a facility to receive crude oil by rail, store it on site, and load it on marine vessels for shipment to end users primarily located on the West Coast. Unit trains will arrive at the project site and be stationed on the Facility rail loops. The trains will be brought to the unloading area (Area 200) where the crude oil will be gravity-drained into the collection piping system, and pumped into the transfer pipeline system (Area 500). Crude oil will be pumped through the transfer pipelines to the storage tanks (Area 300) or directly to berthed vessels (Area 400). Marine vessels will arrive and moor at the dock (Area 400) where they will be preboomed. Crude oil will be pumped from the storage tanks or unloading building to the loading area, and loaded to marine vessels. A complete facility description is located within the ASC.

2. Type of Industry or Business

The proposed Facility is classified as a transload facility. The Facility will receive crude oil by rail, store it on site, and load marine vessels. The Standard Industrial Classification for the Facility is 5171 "Petroleum Bulk Station and Terminal" and the equivalent North American Industry Classification System code is 422710. The Facility will be staffed by approximately 176 employees and will operate 24 hours a day, 7 days a week, 365 days a year. The Facility will not conduct any processing or refining of crude oil.

3. Kind and Quantity of Product

The proposed Facility is designed to receive an average of 360,000 barrels (bbl) of crude oil per day. The Storage Area consists of six storage tanks designed with a shell volume of 380,000 bbl and an operational volume of 360,000 bbl. The Facility is conservatively designed to transfer a range of crude oils from API 15 to API 45. Sample Material Safety Data Sheets (MSDSs) for crude oil are attached in Appendix K. The Marine Terminal is designed to serve oceangoing vessels and articulated tug barges with an operational capacity of up to 500,000 bbl.

4. Project Summary

Sections 5 through 7 that follow discuss the collection, treatment, and discharge of operations-related stormwater by the Facility. Sections 8 and 9 discuss the collection treatment and discharge of domestic and process wastewaters from the Facility.

A stormwater runoff model was developed for the entire Facility located within the lease boundaries, including areas of the Facility within the non-exclusive lease areas in which stormwater is collected and treated by existing stormwater infrastructure. The runoff model for the entire site was developed using WWHM Version 3 and is located in Appendix E. The site-wide runoff results for the existing conditions and the constructed Facility are summarized in Table 6 below.

Table 6. Facility Site Stormwater Summary

	Pre-Construction	Completed Facility
Total Site Area	47.4 Acres	47.4 Acres
Percent Impervious	95.7 %	93.7 %
Disturbed Area	40.4 Acres	43.4 Acres
2-Year Peak Runoff	15.68 cfs	15.23 cfs
10-Year Peak Runoff	24.60 cfs	23.86 cfs
25-Year Peak Runoff	29.66 cfs	28.76 cfs
100-Year Peak Runoff	38.02 cfs	36.86 cfs

The Facility will generate approximately 24 gallons per minute (gpm) of process and domestic wastewater from several of its operations as discussed in detail in sections 8 and 9. Depending upon its source, process wastewater will be either collected, stored on site, and hauled to an approved disposal location; treated and discharged to stormwater; or pretreated and discharged to the City's sanitary sewer. All domestic wastewaters will be discharged to the City's sanitary sewer. A summary of the Facility's discharges are in Table 7 below.

Table 7. Facility Process Wastewater Discharge Summary

Wastewater Streams	Average Daily Flows (gpd)	Maximum Daily Flows (gpd)
Area 200		
Miscellaneous part/equipment wash	2,400[a]	5,000[a]
Fire pump cooling water	100[a]	200[a]
Area 300		
Pump basin sump effluent	100[b]	7,000[b]
Fire pump cooling water	100	200
Area 400 fire pump cooling water	100[a]	200[a]
Area 600 boiler building effluent	16,200	19,900
Total process wastewater	19,000	32,500
Total process wastewater to sanitary sewer	16,400	27,100

[a] Process waster discharged to stormwater system for treatment or stored on site and hauled off site for disposal.

[b] Waste flows from this basin are calculated assuming (at this time) that the basin is not covered. Average day flows were calculated distr buting the annual rainfall total of 38.9 inches per year to determine gpd. Maximum rainfall was calculated using the 100-year storm rainfall event of 4.5 inches per day.

Domestic wastewater will be generated from the administrative and support buildings in Area 200, the storage building in Area 300, and portable restrooms at Area 400. Domestic wastewater is primarily generated from kitchen/break room, restroom facilities, and shower areas. A summary of domestic sources is shown in Table 8 below. Domestic wastewater values were calculated using 35 gallons per day per employee plus approximately 10 percent for visitors, kitchen, inspectors, and maintenance staff.

Table 8. Domestic Wastewater Summary

Wastewater Streams	Average Daily Flows (gpd)	Maximum Daily Flows (gpd)
Area 200 administrative and support buildings	5,300	6,100
Area 300 storage building	500	750
Area 400 domestic use[b]	500[a]	750[a]
Total domestic wastewater	6,300	7,600
Domestic wastewater to sanitary sewer	5,800	5,350

[a] Domestic wastewater stored on site and hauled off site for disposal.

[b] Wastewater production at areas 300 and 400 increased over assumed employee concentrations of 4 and 10, respectively, to allow for staffing reallocation in the future.

5. Operational Quantity and Quality of Industrial Stormwater

This section summarizes the design of the permanent stormwater system, including a description of the contributing areas, collection, and conveyance system design. The treatment methodologies and treatment unit sizing are discussed in detail in section 7.

5.1 Flow Control Exemption

The Facility will discharge to existing Columbia River outfalls through existing manmade conveyance pipelines. This waterbody is categorically exempt from the flow control provisions of Ecology's *2012 Stormwater Management Manual for Western Washington*. According to Appendix I-E of the manual, the Columbia River is listed as a flow control-exempt water body. Redevelopment is proposed within the existing drainage areas of developed storm drain systems that discharge through manmade conveyances directly to the Columbia River.

Redevelopment of the existing brownfield Facility location will not result in the diversion of drainage from any perennial stream or from any category of wetland and will not discharge stormwater to streams or wetlands.

Stormwater will be collected on site, and stormwater exposed to pollution-generating surfaces will be treated. Where feasible, stormwater from roof areas considered to be non-pollution generating will be discharged directly to the existing stormwater systems. Project areas handling crude oil, specifically rail unloading building, and storage tank areas are equipped with additional structural controls for containment.

Stormwater from surface improvements will be collected through a series of inlets and storm drain systems, routed through on-site treatment, and discharged to existing on-site manmade pipelines. These pipelines continue through manmade conveyance and/or treatment systems before discharging through piped outfalls to the Columbia River. Area 400 – Marine Terminal will use constructed bio-infiltration swales to discharge stormwater. Due to the proximity of the swales to the Columbia River and groundwater, stormwater will be treated through media filter drains and stormfilter units.

The Port operates and maintains the downstream conveyance systems and treatment systems. There have been multiple projects to build and modify these systems over time. The most recent design reports available for the downstream conveyance systems are attached in Appendix D.

5.2 Stormwater Collection and Conveyance

5.2.1 Collection and Conveyance System Design Standards

The stormwater collection systems generally consists of catch basins, area inlets, gutters and storm drains located throughout the Facility areas. To the maximum extent practical, the site has been graded to drain gently towards the located inlets. Stormwater from pollution-generating surfaces will be directed to inlets and conveyance systems located upstream of water quality treatment units.

Portions of the transfer pipelines (Area 500) and Facility rail infrastructure will be located within non-exclusive lease areas, which are referred to in this report as general use areas. The Port has existing stormwater collection systems in these areas that manage industrial stormwater.

All Facility stormwater conveyance systems will have monitoring manholes constructed at all locations where the Facility's stormwater is discharged to the port's downstream systems. Monitoring in accordance with the NPDES Industrial Individual Permit is proposed only at locations where the Facility will contribute stormwater from pollution-generating surfaces. The Facility-proposed monitoring locations are shown on each area's stormwater plans and the locations are discussed in detail below.

The proposed conveyance systems are designed to handle the 25-year, 24-hour storm event. The design was also evaluated for the 100-year, 24-hour storm event to determine flooding potential during this extreme event. In general, pipe sizes and slopes were chosen so as not to exceed 75 percent of full flowing capacity during the 25-year storm event.

A hydraulic model of the proposed conveyance system was constructed using the Storm and Sanitary Analysis (v.2012) module by Autodesk. Conveyance piping, orifice structures, and pumps were input to the model as links. Inlets, catch basins, manholes, and storage structures (including pump station wetwells) were input as junction structures. The contributing drainage areas assumed negligible off-site in-flow and zero evaporation. The hydrology method used to estimate peak flows and total storm volumes was the Santa Barbara Urban Hydrograph (SBUH), with time series graphs obtained from Clark County using a Soils Conservation Service (SCS) Type 1A 24-hour storm distribution. The total rainfall depth for the 25-year and 100-year, 24-hour storm events is 3.6 inches and 4.3 inches, respectively.

Drainage basins were delineated based upon proposed grading of the Facility. Drainage basin maps, with the proposed surface coverage types, are shown in Figure 6 and Figure 7, Facility elements in Terminal 4 and Terminal 5, respectively.

Full model results for each storm event are included in Appendix F. Summary results are listed in Table 9. Rainfall intensity amounts described earlier in section 1.4.8 are used in the development of the Type 1A rainfall distribution hydrograph. The results are shown in Table 9.

Table 9. Summary of 25-Year Storm Event Model Results

Drainage Basins	Total Area (acres)	Contributing Area (acres)	25-Year Storm Flow Rate (cfs)	100-Year Storm Flow Rate (cfs)
Area 200 Admin/Support Buildings[1]	1.6	0.8	0.66	0.80
Area 200 Rail Offloading Area[2]	6.2	5.3	3.39	4.22
Area 300 Containment Berm[3]	18.2	18.2	2.0	2.0
Area 300 Support Buildings and Parking[4]	2.9	1.6	1.1	1.36
Area 400 Marine Terminal[5]	7.7	2.2	N/A	N/A
Area 500 Transfer Pipeline[5]	4.9	N/A	N/A	N/A
Area 600 West Boiler[6]	0.9	0.5	0.31	0.38
Rail Infrastructure[5]	5.4	N/A	N/A	N/A
Total	47.77			

Notes:

1. Modelled flow in manhole 0200-SDMH-002.
2. Includes ground area surrounding building at inlets 0200-CB-003 and 0200-CB-005, plus rail unloading shed roof drains connected to manholes 0200-SDMH-009 and 0200-SDMH-022.
3. Flow rate restricted by orifice structure 0300-CS-001 OR to match peak capacity of oil-water separator 0300-OWS-001 (approx. 880 gpm). Tank roof drains connected to storm system outside berm area.
4. Includes sub-basins 0300-1, 0300-2, and 0300-3.
5. Marine Terminal, Transfer Pipelines, and Rail Infrastructure areas not modelled. Existing collection systems or dispersion currently in place in these areas.
6. Modelled flow rate at manhole 0600-SDMH-001.
7. Total acreage modeled is higher than areas within the lease boundary as a result of treating 0.2 acre of off-site impervious that contributes to the Facility.

Copyright © BergerABAM. All Rights Reserved.

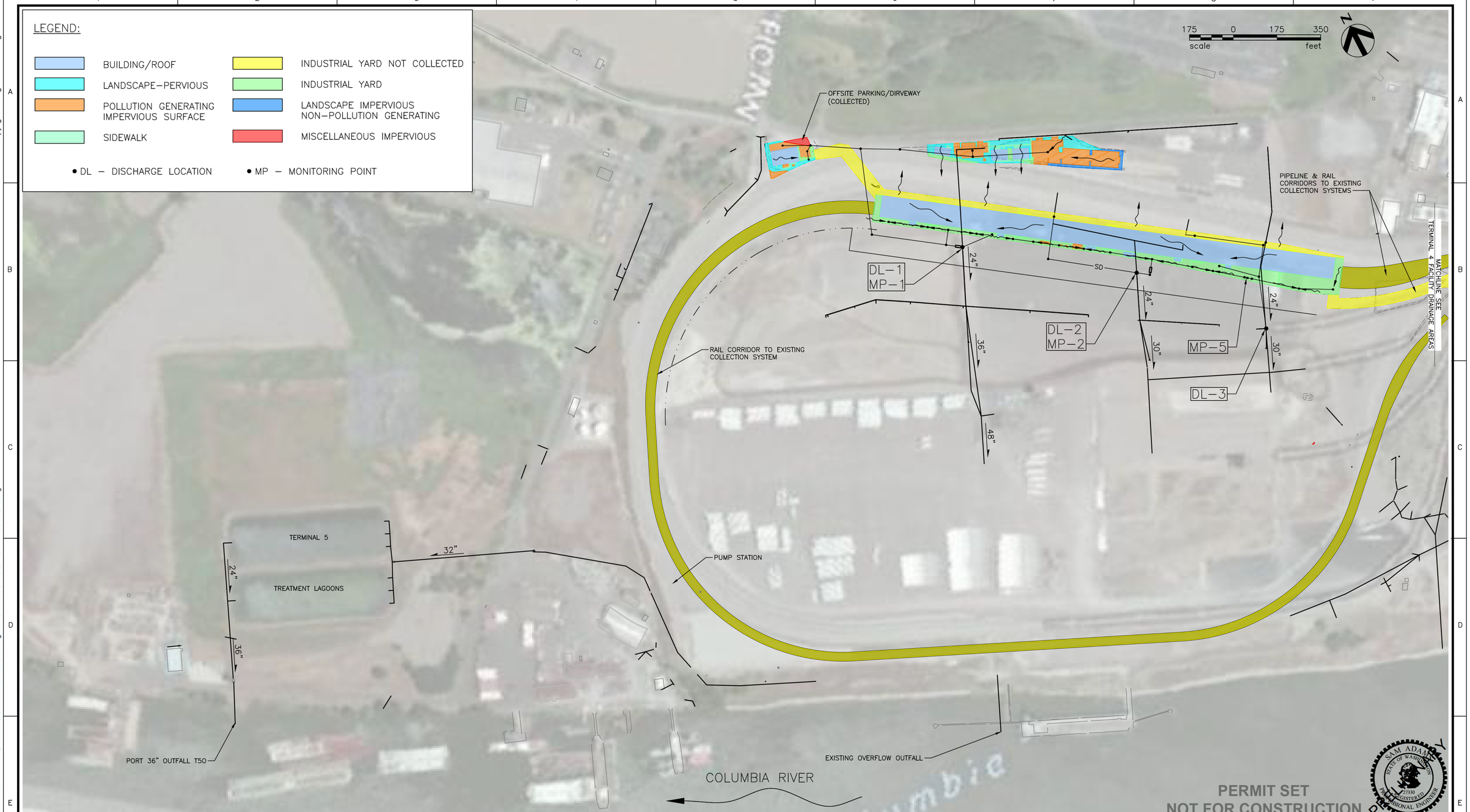

PERMIT SET
NOT FOR CONSTRUCTION

NO.	DATE	REVISION	BY	CK'D	APP

BergerABAM
700 NE Multnomah Street, Suite 900
Portland, Oregon 97232-4189
(503) 872-4100 FAX: (503) 872-4101

VANCOUVER ENERGY
Tesoro Savage Petroleum Terminal LLC

PROJECT:
VANCOUVER ENERGY
PORT OF VANCOUVER, WASHINGTON

DESCRIPTION:
TERMINAL 5 – FACILITY DRAINAGE SYSTEM & PROPOSED SURFACING

DESIGN:	DRS	START DATE:	2/26/2015	SCALE:	AS SHOWN
DRAWN:	TNP	PRINT DATE:	10/12/2015	PROJECT MANAGER:	SAVAGE_PM
CHECKED:	MCH	APPROVED:	SA	SIZE:	24x36
DRAWING NUMBER				SHEET	REV.
				1/1	

Last Saved by: Tony.pritchett on: Feb 26, 2015 10:06 AM File: Q:\Vancouver\2013\A13.0287\02\CADD\Figures\TERMINAL 5 FACILITY DRAINAGE AREAS.dwg

This page left blank intentionally.

Copyright © BergerABAM. All Rights Reserved.

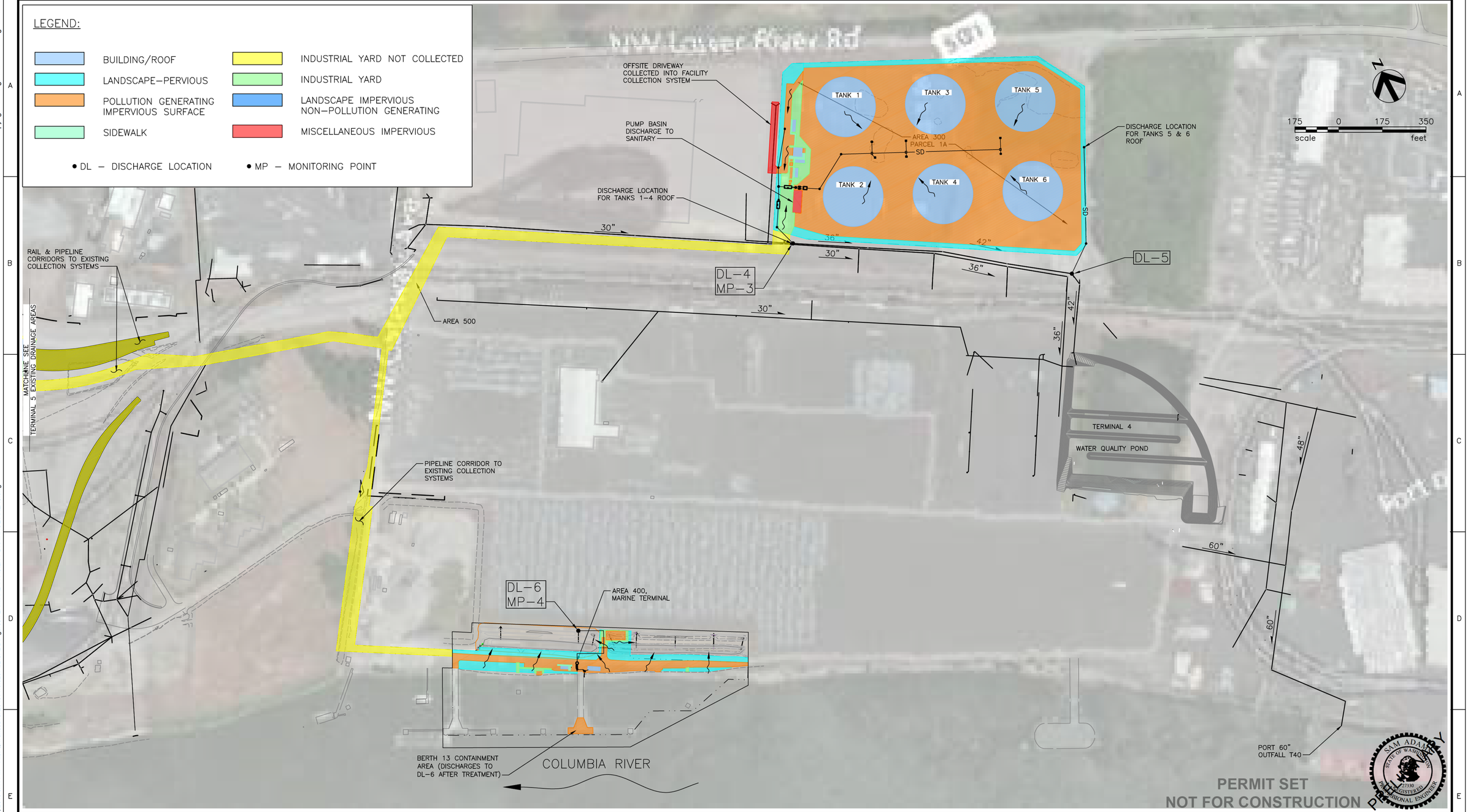

NO.	DATE	REVISION	BY	CK'D	APP

BergerABAM
700 NE Multnomah Street, Suite 900
Portland, Oregon 97232-4189
(503) 872-4100 FAX: (503) 872-4101

VANCOUVER ENERGY
Tesoro Savage Petroleum Terminal LLC

PROJECT: VANCOUVER ENERGY
PORT OF VANCOUVER, WASHINGTON

DESCRIPTION: TERMINAL 4 – FACILITY DRAINAGE SYSTEMS & PROPOSED SURFACING

DESIGN:	DRS	START DATE:	2/24/2015	SCALE:	AS SHOWN
DRAWN:	TNP	PRINT DATE:	2/26/2015	PROJECT MANAGER:	SAVAGE_PM
CHECKED:	MCH	APPROVED:	SA	SIZE:	24x36

DRAWING NUMBER | SHEET 1/1 | REV.

Last Saved by: Tony.pritchett on: Feb 24, 2015 5:41 PM File: Q:\Vancouver\2013\A13.0267\02\CADD\Figures\TERMINAL 4 FACILITY DRAINAGE AREAS.dwg

This page left blank intentionally.

5.2.2 Area 200 – Unloading and Office

The Facility in Area 200 will be separated into two distinct development areas. The administration and support buildings are located north of the rail transportation corridor on Old Lower River Road and the rail unloading facility is located on the southern portion of the rail transportation corridor inside the Terminal 5 loop tracks.

Stormwater from both development areas, as well as from the West Boiler (Area 600), will be treated on site and then discharged to the existing stormwater system in the project vicinity.

The proposed surface coverage located within the rail unloading area is summarized below in Table 10. The table is organized by the surfaces that were analyzed in the hydraulic and water quality models. The surface type used in the WWHM Version 3 water quality model is also identified.

Table 10. Areas 200/600 - Unloading and Office, incl West Boiler - Proposed Surface Coverage

Surface Description	Existing Condition	WWHM Type	Area (acres)
Rail Unloading - Uncollected Stormwater			
Walkways	Untreated Impervious	Sidewalks/Flat	0.01
Industrial Yard	Untreated Impervious	Parking/Flat	0.3
Rail Unloading - Facility West Roof			
Building	Untreated Impervious	Roof/Flat	1.9
West Boiler, Admin/Support Area, and West Portion of Industrial Yard			
Parking and Drive Aisle	Untreated Impervious	Roads/Flat	0.9
Buildings	Untreated Impervious	Roof Tops/Flat	0.2
Sidewalk/Walkways	Untreated Impervious	Sidewalks/Flat	0.1
Industrial Yard	Untreated Impervious	Parking/Flat	0.2
Landscaping	Untreated Impervious	A/B, Lawn, Flat	0.1
West Boiler – Uncollected Stormwater			
Industrial Yard	Untreated Impervious	Parking/Flat	0.4
Admin/Support Area – Uncollected Stormwater			
Buildings	Untreated Impervious	Roof Tops/Flat	0.2
Industrial Yard	Untreated Impervious	Parking/Flat	0.0
Landscaping	Untreated Impervious	A/B, Lawn, Flat	0.5
Vanexco Cap Industrial Yard			
Sidewalk/Walkways	Untreated Impervious	Sidewalks/Flat	0.01
Industrial Yard	Untreated Impervious	Parking/Flat	0.6
Rail Unloading - Facility East Roof			
Building	Untreated Impervious	Roof/Flat	1.9
East Portion of Industrial Yard			
Sidewalk/Walkways	Untreated Impervious	Sidewalks/Flat	0.04
Industrial Yard	Untreated Impervious	Parking/Flat	1.3
Buildings	Untreated Impervious	Roof/Flat	0.04
Mechanical Equipment	Untreated Impervious	Roads/Flat	0.03
Total (West Boiler and Unloading and Office)			**8.7**

The results of the collection system modeling for Area 200 are summarized in Table 11. A detailed description of the collection system follows. The table includes data from Area 600 as it contributes directly to the sizing of the proposed stormwater system.

Table 11. Area 200 - Unloading and Office - Collection System Model Results

Collection System ID	Total PG* Area (acres)	Total NPG ** Area (acres)	25-Year Storm Flow Rate (cfs)
West Outfall (0200 STM-1):			
Area 200 Admin/Support Buildings	0.8	0	0.66
Area 200 Rail Offloading Area[1]	0.0	2.1	1.42
Area 600 West Boiler	0.1	0.3	0.3
Total	0.9	2.6	2.38
Central Outfall (0200 STM-2):			
Vanexco Cap – West[4]	2.6	0	2.15
Area 200 Rail Offloading Area[2]	0	1.3	0.41
Total	2.6	1.3	2.56
Eastern Outfall (0200 STM-3):			
Vanexco Cap – East[4]	4.8	0	3.91
Area 200 Rail Offloading Area[3]	0	1.9	1.56

*PG=pollution-generating; **NPG=non-pollution generating

Notes:

1. Western portion including at-grade areas and roof totaling approximately half of the Rail Unloading Area.
2. Eastern portion of at-grade area.
3. Eastern half of rail shed roof.
4. Vanexco Cap Totals include full contributing area outside of lease areas. Table 7 includes areas within Facility lease-hold.

5.2.2.1 Administration and Support Buildings

Stormwater from the administration and support buildings will be collected into a single stormwater system running predominantly east to west. At the west end stormwater is commingled with runoff from the West Boiler (Area 600) before heading south under the rail corridor to serve the rail unloading facility.

Pollution-generating surfaces proposed in this area will consist of the parking lots and driveways. Stormwater from the roof areas will be collected in rain gutters and discharged directly to the stormwater system. Runoff from the site areas, including sidewalks and landscaping, will be directed towards the developed parking lots where feasible, or when not infiltrated in soils, will be dispersed following the existing topography and runoff patterns south into the rail corridor.

The two proposed containment tanks will be located to the southeast of the easternmost administration/support building will be installed on a concrete pad sloped towards the parking lot. The tanks will be double-walled to satisfy containment requirements and will be unloaded by a vacuum truck service licensed to haul and disposal of potentially oily water.

The tanks will receive flow from the containment trenches and drainage systems located within the rail unloading building. The connecting pipeline will be fully welded steel and be located above-ground for visual monitoring. The tanks will be operated such that 825 bbl of capacity is reserved to contain an entire railcar (plus 10 percent). A remaining 175 bbl will be used for stormwater contributing into the rail

unloading buildings floor drains, and rail drip pans as well as occasional washdown water for parts and fittings.

5.2.2.2 Unloading Facility

Stormwater for the rail unloading facility will consist of roof runoff from the rail unloading building and stormwater collected from the industrial yard area on the south side of the building. Stormwater on the north side of the building will remain unchanged.

The roof of the rail unloading building is designed as a single shed section to the south. Stormwater will be collected in rain gutters installed along the south side of the building and be collected at two rain drain locations. From these points, the stormwater will be discharged into a collection manhole upstream of the Facility's monitoring manholes. Stormwater collected from the roof areas is segregated from pollution-generating surfaces and is not proposed to receive water quality treatment.

A series of area inlets along the south side of the building will collect stormwater from the industrial yard area. No industrial activities are proposed in this location. Stormwater from the roof areas of the E-houses, control room, and fire pump building will be commingled in this area with stormwater from the ground and the mechanical and electrical equipment pads. A small berm installed along the Facility's fence line will segregate stormwater in this area from the proposed rail track south of the Facility.

Possible pollution-generating surfaces in this area include the air compressor equipment pad and electrical metering and transformer equipment. All equipment will be inspected regularly to promptly identify leaks and drips. All electrical transformers and equipment will use mineral oil. After grading, a layer of imported gravel or similar material will be placed to prevent soil erosion and facilitate pedestrian access. Vehicle access will be prohibited except for infrequent maintenance.

The collection system on the south side of the rail unloading facility is designed into two systems on the east and west. Stormwater from the western system will be commingled with runoff from the administration and support building and West Boiler and treated through a StormFilter water quality vault. Section 7 includes a detailed description of sizing and water quality. Treated stormwater is then commingled with the roof runoff from the western half of the rail unloading building and discharged to the existing system at discharge Location 1. The eastern system is treated through a StormFilter water quality vault and then commingled runoff from the rerouted western portion of the Vanexco Cap and discharged to the existing system at discharge Location 2. Rerouted stormwater from NGL Supply and the eastern portion of the Vanexco Cap will be commingled with roof runoff from the eastern portion of the rail unloading building and discharged to the existing system at discharge Location 3.

Additional stormwater improvements necessary to facilitate construction of the Facility, include rerouting stormwater from the collection system located on top of the Vanexco Cap liner and conveying stormwater from existing NGL Supply. These drainage lines need to be relocated to avoid conflicts with the proposed building structure. Construction details for connections to the Vanexco Cap drainage system are included in Appendix C. These improvements are intended only to convey stormwater collected upstream. The Facility is not proposing to add additional stormwater or pollutants into these systems.

5.2.3 Area 300 – Storage

The proposed Facility in Area 300 is generally described in two development areas. The storage tank containment area will contain the six storage tanks, piping, and stormwater collection systems located within an approximate 6-foot-tall containment berm. The support area includes the Facility driveway, parking lot, E-houses, electrical and mechanical equipment, and storage building which are all on the western portion of the parcel.

Stormwater during regular operations from both development areas will be treated on site and discharged to the existing stormwater system currently installed along the south side of the parcel adjacent to the rail

corridor. There are two discharge locations and they are described below as the West Outfall and East Outfall. The East Outfall collects only non-pollution generating stormwater from the roofs of the two easternmost storage tanks.

The proposed surface coverage located within the Storage Area is summarized below in Table 12. The table is broken up into the surfaces that were analyzed in the hydraulic and water quality models. The surface type used in the WWHM water quality model is also identified.

Table 12. Area 300 - Storage Area - Proposed Surface Coverage

Surface Description	Existing Condition	WWHM Type	Area (acres)
Storage Area - Tank Area			
Storage Tank Roofs	Untreated Impervious	Roof Tops/Flat	6.23
Storage Area - Uncollected Stormwater			
Exterior Berm Landscaping	Untreated Impervious	A/B, Lawn Flat	1.2
Containment Area Stormwater			
Containment Yard Area	Untreated Impervious	Roads/Flat	11.96
Storage Area - Support Buildings, Parking, and Industrial Yard			
Landscaping	Untreated Impervious	A/B, Lawn, Flat	0.36
Support Buildings	Untreated Impervious	Roof Tops/Flat	0.09
Sidewalks	Untreated Impervious	Sidewalks/Flat	0.05
Parking Area /Drive Aisle	Untreated Impervious	Roads/Flat	0.31
Industrial yard	Untreated Impervious	Parking Flat	0.57
Total			**20.8**

The results of the collection system modeling for Area 300 are summarized in Table 13. A detailed description of the collection system follows.

Table 13. Area 300 - Storage Area - Collection System Model Results

Collection System ID	Total PG Area (acres)	Total NPG Area (acres)	25-Year Storm Flow Rate (cfs)
West Outfall (0300 STM-1):			
Storage Tanks (4)[1]	0	4.2	3.47
Containment Berm[2]	5.4	0	2.0
Support Buildings and Parking	0.4	1.1	1.1
Total	5.8	5.3	6.57
East Outfall (0300 STM-2):			
Future Storage Tanks (2)	0	2.1	1.74
Total	0	2.1	1.74

Note:
1. Modelled flow from "Tank Roofs."
2. Flow rate listed is prior to orifice structure 0300-CS-001 OR. Flow rate is restricted by the orifice structure to match peak capacity of oil-water separator 0300-OWS-001 (approx. 880 gpm). Flow rates in excess of conveyance system capacity allowed to pond within berm area.

5.2.3.1 Storage Tank Containment

The stormwater system in the containment area is designed for normal operations. Under normal operations, the storage tanks are designed to be a fully closed system where crude oil is not exposed to stormwater. Upset conditions, including major servicing, draining of tanks below their normal operational

low levels, and product releases, will require additional operational stormwater BMPs and/or spill response actions.

The containment systems include a 2-foot tall intermediate berm surrounding each tank. Stormwater from each tank will be collected at a single inlet adjacent to the center berm. Each inlet will be equipped with a spill trap capable of containing a minimum of 5 gallons of oil. Stormwater piping will be welded HDPE and isolation valves will be provided in control structures located along the center berm. The control valves for the intermediate berms will be maintained in the open position. During maintenance activities or minor spills, these will be closed to isolate the affected areas.

Piping from each intermediate berm will collect at the center berm and will be transferred to a control structure located at the west end of the containment area. The control structure will be equipped with API style oil water separation baffles. The outlet of the control structure will be equipped with a flow control tee and horizontal orifice to restrict flows from the containment area to the rated capacity of the downstream parallel oil-water separators. Stormwater then will be treated through two coalescing plate oil-water separators before discharging into a stormwater pump station.

The control structure will limit discharges leaving the containment area to 880 gpm to meet the design flow rates for the oil-water separation as described in section 7. As a result the conveyance system and containment berm may experience minor ponding during large storm events. Hydraulic modelling estimated the maximum depth of ponded water within the containment berms to be approximately 0.15 feet (2 inches) during the 25-year storm event.

The pump station will operate only by manual control after the operator had confirmed no visible oil sheen within the pump station. The elevations of the control structure, oil water separators, and pump station are designed to maintain the required full containment volume at all times. The containment berm is sized to store the full contents of 110 percent of one tank plus a 100-year rainfall event.

The pump station then discharges to a StormFilter vault equipped with granulated activated carbon (GAC). Sizing of the treatment units including the control structure, oil-water separators, pump station, and treatment vaults are discussed in detail in section 7.2. Following treatment in the water quality vault, the stormwater is commingled with stormwater from the parking lot and support area.

The roofs of the containment tanks are the only non-pollution generating surfaces that are separated from the remainder of the site. Stormwater is collected from the roof of each tank and piped through fully welded HDPE pipelines from the containment area to connections with the stormwater system. The roof drains are designed with containment valves.

The pump basin containing the crude oil transfer pumps which transfer product from the Storage Area to the Marine Terminal will be located within the containment area. Stormwater from this approximately 3,300 square feet area will discharge through a sump and normally closed valve to an oil-water separator prior to discharge to the City's sanitary sewer.

5.2.3.2 Support Area

Stormwater from the support area will be collected in catch basins in the driveway, parking lot areas, and an area inlet from the industrial yard. All stormwater collected here is commingled with treated stormwater from the containment area. Stormwater is then treated through a StormFilter water quality vault.

Pollution-generating surfaces include the driveway, parking lot areas, and equipment area containing the electrical substation, transformers, metering equipment, and mechanical air compressors. The electrical gear will use mineral oil and all equipment will be inspected regularly to promptly identify drips or leaks of any oils or lubricants. The yard area consists of graveled surfacing gently graded to inlets. Vehicle use in this area will be prohibited except for occasional maintenance.

5.2.3.3 Pump Basin

Stormwater from the pump basin will be collected in a sump located in the southwest corner of the concrete basin. Under normal operations, stormwater from this basin will be collected and pass through an oil-water separator sized to treat the 100-year, 24-hour storm event. Stormwater will be discharged to the City's sanitary sewer system in a combined lateral from the storage building. The pump basin houses the transfer pumps, valves, piping, and appurtenances necessary for operation of the transfer pumps.

During maintenance activities of the equipment, a containment valve located on the collection sump will be closed. Absorbent pads, dip pans, and other temporary spill containment measures will be in place to protect the water quality. Any oily residue from release of product, seals, or lubricants will be cleaned and any releases will be contained within the concrete pump basin, collected and hauled off site for disposal.

Discharge to sanitary sewer from this limited 3,300-square-foot basin was selected due to the large and concentrated number of fittings and routine maintenance. The discharge amounts related to this have been calculated on an annual average and maximum day (100-year, 24-hour) storm events. Details of those calculations are included in section 8.3.3. The 100-year, 24-hour event will result in 7,000 gallons of stormwater or approximately 5 gpm. The oil-water separator selected is rated to treat a standard flow rate of 27 gpm and a maximum process rate of 144 gpm.

5.2.4 Area 400 – Marine Terminal

Marine Terminal stormwater will be infiltrated through a series of bioinfiltration swales that were constructed as part of the Auto Terminal expansion in mid-1990s. The swales were designed to serve the entire 25-acre drainage basin. Stormwater at the dock is currently not collected or treated and sheet flows directly into the Columbia River. The upland portions waterward of the swales are currently graded towards the river and sheet flow down the embankment into the river.

The construction of the terminal will make significant improvements to the capture of stormwater in this area. The upland portions will be graded back toward the bio-infiltration swales. Runoff from the access driveway will be treated through a media filter drain installed between the edge of pavement and the bioinfiltration swale.

One 120-lineal-foot section of biofiltration swale will be removed to install the marine vapor control units. Runoff currently being directed to this swale will be rerouted to the swale immediately east for treatment.

Runoff from the replaced section of the trestle will continue to sheet flow into the Columbia River. The trestle will not be used for regular vehicular traffic and, therefore, is not a pollution-generating surface. Stormwater collection and containment will be provided at the face of the dock. The containment area includes all areas inclusive of all fittings, hoses and mechanical equipment. According to 33 CFR 154.530, containment in this area is required to capture a minimum 3 bbls based upon the Facility's loading equipment. A total containment volume of 1989 cubic feet is provided equaling approximately 350 bbl.

During loading operations, the containment valve at the dock will be maintained in a closed position. Following loading operations, the containment area will be inspected visually for a sheen and, if necessary, spill response measures will be taken to clean up any oils or contaminates present. A gravity drain line extends from the containment area upland. At the upland area, stormwater from the dock will be treated through an oil-water separator and a series of water quality vaults containing ZPG media and granulated activated carbon filters. Following treatment, stormwater will be pumped and discharged to the biofiltration swales.

The proposed surface coverage located within the Marine Terminal is summarized in Table 14. The table is broken into the subbasins that were analyzed in the hydraulic and water quality models. The surface type used in the WWHM water quality model is also identified.

Table 14. Area 400 - Marine Terminal - Proposed Surface Coverage

Surface Description	Existing Condition	WWHM Type	Area (acres)
Marine Terminal – Upland Areas			
Landscaping	Untreated Impervious	A/B, Lawn, Flat	0.9
Parking/Drive Aisle	Untreated Impervious	Roads/Flat	1.0
Buildings	Untreated Impervious	Roof/Flat	0.03
Sidewalk/Walkways	Untreated Impervious	Sidewalks/Flat	0.01
Industrial Yard	Untreated Impervious	Parking/Flat	0.1
Total			2.0
Marine Terminal – Containment Area			
Loading Containment Area	Untreated Impervious	Roads/Flat	0.1
Total			2.1

5.2.5 Area 500 – Transfer Pipelines

The transfer pipelines are located in non-exclusive easements with the port. Transfer pipelines are not considered to be pollution-generating surfaces and therefore the port's existing stormwater system is adequate to serve the Facility areas located within the general use areas. The pipelines will be constructed so as to not modify existing drainage patterns. The stormwater collection systems in this area of the port's general use are not subject to industrial activity created by a single source or lessee. The stormwater systems in Terminal 4 and Terminal 5 that receive stormwater from the transfer pipelines are permitted under existing Stormwater permits and stormwater from these areas is treated prior to discharge to the Columbia River.

Granular rock surfacing will be installed underneath the above grade sections of pipeline. The project has identified the downstream catch basins and area inlets within the immediate vicinity of the transfer pipelines. The locations of retrofitted catch basins is specified on the Environmental Control plans submitted in Appendix C. Spill traps capable of retaining a minimum of 5 gallons of oil will be retrofitted on the downstream stormwater system. The transfer pipeline corridor will be inspected visually every day for damage, corrosion, and pinholes. Leak detection monitors based on flow volumes will also be installed on the pipelines and monitor constantly for any sign of damage or leaks in the pipelines. Inspection of the downstream stormwater inlets for oil sheen will be performed weekly.

Belowgrade sections of pipeline will additionally be installed with leak detection to monitor for leaks or groundwater intrusion. Transition vaults between abovegrade sections of pipeline and belowgrade sections will be inspected weekly.

5.2.6 Area 600 – West Boiler

The West Boiler is not proposed to be constructed in the first phase of development. The West Boiler, the associated pipe bridge, and the mechanical outfitting of the third unloading rail station are deferred as described in the ASC. The project is requesting approval for improvements for this area as part of the application.

The industrial processes associated with the future West Boiler will be fully contained within the west boiler building. The site includes the building, parking lot and driveway, E-house, and landscaping improvements. Pollution-generating surfaces in this area will include the driveway and parking area. Transfer pipelines are above grade and are non-pollution generating. Runoff from the roofs of the building and E-house will be directed to the ground and collected in the stormwater system.

The stormwater system includes two catch basins located within the pavement limits of the driveway and parking lot and an area inlet located in a grassy swale constructed on the south side of the building. The swale is constructed for conveyance only to direct stormwater from the site to the inlet for collection.

Stormwater from the West Boiler is routed east and discharges by gravity into the stormwater line crossing south under the rail corridor. From here, stormwater commingles with stormwater from the administration and support buildings, West Boiler, and yard drains at the west end of the rail unloading building for treatment through a StormFilter water quality vault prior to discharge to the existing Terminal 5 stormwater system.

5.2.7 Rail Infrastructure

The rail infrastructure that will be used by the Facility are bounded on either side by rail transportation tracks that are for general use by the Port and by other tenants. The rail located within the EFSEC jurisdictional boundary is intended for rail transportation, and therefore there is no functional difference between the possible pollution sources of the Facility rail and the adjacent port rail. The drainage systems installed by the Port as part of the redevelopment at Terminal 5 were designed for runoff from the rail corridor and will continue to collect, convey, and treat stormwater from this area. The design report for the WVFA project is included in Appendix D.

The rail improvements proposed by the Facility include approximately 4,900 linear feet of an additional rail loop to be constructed on the outside of the existing WVFA rails on approximately 1.8 acres. The construction of the rail loop will reduce the existing gravel access road width and will not result in any modifications to the prior pollution generating impervious surface totals. The improvements will be constructed without impacting the existing drainage patterns of the site and are located within the previously developed rail and road corridor. Drainage inlets will be retrofitted with spill control devices capable of containing a minimum 5 gallons.

The surface coverage proposed within the rail improvement corridor is summarized below in Table 15. The table is broken up into the surfaces that were analyzed in the hydraulic and water quality models. The surface type used in the WWHM water quality model is also identified.

Table 15. Rail Improvements - Proposed Surface Coverage

Surface Description	Existing Condition	WWHM Type	Area (acres)
Rail Improvements			
Industrial Yard	Untreated Impervious	Parking/Flat	1.8

6. Industrial Stormwater Best Management Practices

The Facility has employed BMPs extensively to protect stormwater quality. This section is an overview of the BMPs, which will be installed in each project area. The purpose of this section is to demonstrate the extent to which stormwater has been excluded from the industrial activities on site.

6.1 Structural Best Management Practices

The following sections discuss the structural source controls and BMPs used to isolate stormwater from industrial activities.

6.1.1 Area 200 – Unloading and Office

Industrial activity within Area 200 consists primarily of unloading the railcars and transferring product from the rail unloading building into the transfer pipeline area. The unloading process, pumps, containment

trenches, and conveyance pipelines for crude oil in this area are fully contained within the rail unloading building. The building will be a shed section to prevent most stormwater from entering the unloading area.

Interior to the unloading area, rail drip pans will be installed and floor drains will collect any runoff from the railcars or blown-in stormwater to a collection system. Any stormwater collected in this system will be pumped to the containment tanks located at the administration and support building area to be hauled off and legally disposed of. The floor will be graded and designed to direct any spill internally into the rail drip pans or the containment trenches. A perimeter curb for full containment of an accidental discharge is also provided. Table 16 summarizes the BMPs included in Area 200.

Table 16. Area 200 - Unloading and Office - Structural BMPs

Structural BMP	Site Description
Landscaping and lawn/vegetation management (BMP S411)	Landscaping is provided at the Administration and Support Building Area to facilitate natural drainage, infiltration and prevent soil erosion.
Loading and unloading areas (BMP S412)	Product unloading areas are located within the rail unloading building to keep stormwater from contact with the industrial activity. Rail drip pans and containment systems are installed capable of containing 110% of a full railcar.
Parking and storage of vehicles and equipment (BMP S421)	The parking lot area is for employee and visitor parking only and is therefore a not classified as a high use site.
Soil erosion and sediment control at industrial sites (BMP S425)	Crushed imported gravel will be used to control erosion of exposed surfacing along the south side of the rail unloading area.
Storage of liquids in permanent above-ground tanks (BMP S427)	Double-walled storage tanks will be installed for the containment tanks, fire foam, and fuel storage. Tanks will be located on concrete pads for ease of inspection and foam and fuel tanks will be located within the fire foam building.

6.1.2 Area 300 – Storage

Industrial activity within Area 300 consists primarily of the storage of crude oil. The storage tanks meet all applicable API standards. The tanks are provided with a floating internal roof to limit vapor emissions and fixed roofs to keep stormwater runoff from entering the tank. Gutters will capture rainwater and discharge stormwater to the on-site stormwater systems as described in section 5. The transfer pipelines in the containment area are non-pollution generating. Due to the increased number of flanges, fittings, and pump components the pump basin's stormwater will be treated through an oil-water separator and discharged to the sanitary sewer. The only exposed mechanical equipment on site is an air compressor located near the storage building.

Table 17 summarizes the BMPs included in Area 200.

Table 17. Area 300 - Storage - Structural BMPs

Structural BMP	Site Description
Landscaping and lawn/vegetation management (BMP S411)	Landscaping is provided at the Support and Parking Area, as well as on the outside slope of the containment berm. Landscaping is also provided along the north and west property lines to comply with local land use screening regulations. Landscaping will be installed to prevent soil erosion, facilitate natural drainage and infiltration.
Parking and storage of vehicles and equipment (BMP S421)	The parking lot area is for employee parking only and is therefore a not classified as a high use site.
Soil erosion and sediment control at industrial sites (BMP S425)	Crushed imported gravel will be used to control erosion of exposed surfacing in the southwest portion of the site and around the mechanical and electrical equipment near the pump basin.

Structural BMP	Site Description
Storage of liquids in permanent above-ground tanks (BMP S427)	Product storage tanks will be constructed per API standards with double floors and leak detection. Double-walled storage tanks will be installed for the fire foam, and fuel storage. Foam and fuel tanks will be located within the fire foam building.

6.1.3 Area 400 – Marine Terminal

The industrial activity at the Marine Terminal consists primarily of loading vessels with product. Transfer pumps are located at Area 300 and discussed above. Conveyance piping will deliver the product to the dock. The front of the dock where all the flanges, valves, loading arms, and hoses are located is equipped with a spill containment curb. During loading operations, the isolation valve from this area will be closed; only after operations are complete and no visible sheen is observed in the stormwater will the area be drained.

The remainder of the site, including the electrical and mechanical equipment for the fire pump and foam, will be contained within upland structures and not exposed to stormwater. The marine vapor combustion units will be installed on a concrete pad. The units' combust the inert vapors from the vessel hull, using natural gas to assist with the combustion if needed. The reduction of the VOCs is approximately 99.8 percent. Therefore, stormwater contamination from vapor contact in these areas is *de minimis*.

Table 18. Area 400 - Marine Terminal - Structural BMPs

Structural BMP	Site Description
Landscaping and lawn/vegetation management (BMP S411)	Landscaping is provided between the top of bank and the access road wherever feasible. Landscaping is intended to reduce soil erosion. Infiltration directly at the top of bank is not recommended. Stormwater is directed upland toward the bio-infiltration swales.
Parking and storage of vehicles and equipment (BMP S421)	The parking lot is for employee parking only and therefore is not classified as a high use site.
Soil erosion and sediment control at industrial sites (BMP S425)	Crushed imported gravel will be used to control erosion of exposed surfacing where landscaping is not installed.
Storage of liquids in permanent above-ground tanks (BMP S427)	Double-walled storage tanks will be installed for the fire foam, and fuel storage. Foam and fuel tanks will be located within the fire foam building.

6.1.4 Area 500 – Transfer Pipelines

The transfer pipelines are considered non-pollution generating surfaces. There is no activity in this corridor with the exception of routine inspection. Flow measurement and pressure sensors along the pipelines detect leaks and monitor for any indication of accidental releases. Containment measures are provided in downstream stormwater inlets.

Table 19. Area 500 - Transfer Pipelines - Structural BMPs

Structural BMP	Site Description
Soil erosion and sediment control at industrial sites (BMP S425)	Crushed imported gravel will be used to control erosion of soils underneath the pipeline.

6.1.5 Area 600 – West Boiler

Industrial activity at the West Boiler is fully contained within the boiler building and E-house. Transfer of steam to the rail unloading building and return of condensate will be accomplished using fully welded steel pipelines located above-grade transfer pipelines and pipe bridge over the Terminal 5 rail loops.

Table 20. West Boiler - Structural BMPs

Structural BMP	Site Description
Landscaping and lawn/vegetation management (BMP S411)	Landscaping is provided around the parking areas and building sides to prevent erosion, facilitate infiltration and protect existing drainage patterns.
Parking and storage of vehicles and equipment (BMP S421)	The parking lot area is for employee parking only and is therefore a not classified as a high use site.
Soil erosion and sediment control at industrial sites (BMP S425)	Crushed imported gravel will be used to control erosion of exposed surfacing where landscaping is not installed immediately adjacent to the transfer pipelines.

6.1.6 Rail Improvements

No industrial activity takes place within the rail corridor, which is used only for rail transportation. Maintenance activities necessary for rail transportation will be conducted on the rail spur located at the southeast corner of the rail unloading building. Rail containment pans and a concrete working surface will be provided around the rail spur. Stormwater from the rail spur will be collected in catch basins and containment pans within the rail for treatment and monitoring. A containment valve, oil-water separator, and monitoring manhole will be provided for this facility. This stormwater will continue to flow through the stormwater collection system on the south side of the rail building and will eventually contribute flows to water quality vault 0200-WQV-002 for additional water quality treatment. A downstream monitoring manhole is provided to confirm that discharges meet the NPDES permit conditions.

Any maintenance activities related to railcars and locomotives will only be completed for cars already on-site being processed by the facility. The facility will not be used as a maintenance facility receiving railcars from other parties and transporters for maintenance activities.

6.1.6.1 Typical On-site Rail Maintenance

A detailed assessment of possible maintenance needs was completed for this facility. The following maintenance activities may be conducted on site as necessary to maintain safe rail transportation. These most frequently conducted activities only involve use of hand tools, impact wrenches, jacks, carpet knife, and if necessary a small welder.

- Wheel replacement
- Brake chains, boots, cylinder repairs, and/or replacement
- Brake pipe
- Grab iron, hand hold, sill step repairs, and replacement
- Stenciling
- Head-shield bolt tightening
- Hose replacement, hanger repair and replacement
- Placard/holder repair and replacement
- Knuckle pins replacement
- Cage chains replacement
- Rail car exterior washing

Exterior railcar washing is not conducted on site for all vehicles. In accordance with 49 Code of Federal Regulations (CFR) 173.24(4) and 49 CFR 174.57, the Facility is prohibited to release tank cars back to the mainline carrier if there is presence of oily residue on the exterior of the cars as a result of unloading

operations. Facility operators will identify cars whose exterior must be washed for this reason at the time the cars are being unloaded in Area 200. At such time, and within the Area 200 unloading facility (where there is full containment to collect wash materials), the exterior of the railcar, limited to the immediate location of any oily residue, will be spot washed. Spot washing will be accomplished by placing absorbent pads under the railcar below the location being washed, spraying the affected area with environmentally friendly detergent soap (using a hand spray bottle for example), and wiping the area clean by hand with rags/wipes. Rags/wipes and absorbent pads used for cleaning will be collected, bagged, and managed in accordance with appropriate disposal practices for this type of waste. Typically the use of additional wash water is not necessary to complete the cleaning. However, should wash water be needed, it would be applied only to the area from which oily residue is to be removed. A single pressure washer may be used. Any residual wash water not collected in the absorbent pads will be collected in the rail drip pans and discharged to the two containment tanks located at the admin/support area of Area 200. A licensed hauling and disposal company will haul off the tank contents for disposal off site at an appropriate location.

The Applicant's experience is that railcar exterior washing averages one railcar per month at facilities that receive on average one unit train per day. Thus with an average receipt capacity of four unit trains per day, this activity would occur approximately four times per month.

6.1.6.2 Typical Off-site Rail Maintenance

The following maintenance activities are performed with much less frequency and due to the scope of repairs are conducted off site when possible. For repairs conducted on site that may impact water quality, additional secondary containment measures, such as absorbent pads or temporary spill containment measures, will be installed prior to beginning work. Additionally, the control valve will be placed in the closed position in the event of an accidental release.

- Wheel bearing maintenance, repairs, or replacement
- Brake shoe replacement
- Platform, running boards repairs and replacement
- Ladder repairs and replacement
- Manifold repairs and replacement
- Valve repairs and replacement
- Head-shield repairs
- Truck inspection, repair, replacement
- Coupler repairs
- Tank testing
- Welding and plasma cutting

6.1.6.3 Locomotive Maintenance

There is a possibility that a maximum of two locomotives may be on site for rail operations in the facility. Regular maintenance of the locomotives will also be conducted when necessary. The Operations Facility Safety Program submitted to EFSEC under separate cover includes detailed descriptions of locomotive operations and maintenance activities and includes operational BMPs to address water quality.

Typical maintenance activities specific for the switching locomotives may occur on site less frequently for repairs to:

- Traction motors
- Main generators
- Prime mover
- Oil changes

For the maintenance activities above, these operations will be completed on the spur track or inside of the rail unloading where secondary structural containment BMPs are in place. Additional absorbent pads

and/or temporary spill containment measures will be in place underneath the locomotive prior to beginning maintenance activities. Additional temporary spill prevention measures similar to those for mobile fueling will be used when completing oil changes. Replacement of the prime mover will typically be conducted off-site. The following items are described in detail and are considered part of normal locomotive operations.

Engine Blowdown

- If locomotive has been shut down for more than consecutive hours or after a heavy rain, open cylinder test valves located on side of engine block.
- Turn engine over by turning the start button for a couple revolutions.
- Once the blow down is complete, close all test valves and start engine.

Drain Pollution Tank

- Drain oil and water out of retention tank daily.
- Retention tank drain is located on the engineer's side of locomotive next to fuel tank.
- Dispose of waste in an approved container.

Supply Fuel and Sand

- Fuel locomotive per supplier and facility safety rules and regulations.
- Fill sand traps as needed.
- Fuel filler necks are located on each side of unit.
- Rear sand traps are above the battery compartments.
- The front sand traps are located on the sides by the air compressor.

6.1.6.4 Rail Infrastructure Maintenance

Occasionally maintenance to the rail infrastructure will be necessary. Maintenance to the rail track may include

- Welding
- Grinding
- Gas cutting
- Tamping of rail bed
- Regulating
- Placement and spreading rock/ballast
- Rail replacement

Table 21. Rail Improvements - Structural BMPs

Structural BMP	Site Description
Maintenance and Repair of Vehicles and Equipment (BMP S414)	Concrete work surface and rail drip pans are provided on the spur line to collect stormwater and direct to downstream treatment. An oil-water separator and monitoring manhole with containment valve are provided for local treatment.
Soil erosion and sediment control at industrial sites (BMP S425)	Crushed imported gravel will be used to control erosion of exposed surfacing where landscaping is not installed immediately adjacent to the transfer pipelines.
Railroad yards (BMP S422)	Drip pans are provided inside the rail unloading facility where hose/pipe connections exist.

6.2 Operational Best Management Practices

A complete operations SWPPP has been prepared and submitted under separate cover detailing all operations related to maintenance activities and the stormwater prevention procedures used on site. A

SPCCP has also been prepared and is being updated to address specific structural, operational, and response measures in place for the Facility.

7. Stormwater Treatment and Design

Stormwater treatment necessary to meet discharge standards is implicitly dependent upon the amount and types of contaminates the stormwater absorbs or transports along its route. The primary intent of developing a stormwater system is to limit, to the maximum practicable extent, the mixing of industrial activities and stormwater.

To that end, the Facility uses extensive source controls that segregate stormwater from crude oil and its vapors. As a result of the extensive use of structural source controls which segregate stormwater from the industrial operations, active treatment systems are not required by the Facility.

7.1 Chemicals Used in Treatment Process

The Facility will employ a system of passive stormwater treatment units, including oil-water separators, oil traps, and cartridge filter vaults, to treat stormwater. Descriptions of the proposed media and their composition follow. Reference MSDSs for the treatment units are included in Appendix J.

- GAC – Consists of 100 percent activated carbon (CAS# 7440-44-0).
- MetalRx Leaf Media – An absorbent filtration medium which contains 100 percent Earth-Wise certified compost material (CAS# N/A).
- Perlite – Consists of 100 percent perlite, which is a mineral composed of sodium potassium aluminum silicate (CAS# 93763-70-3). Perlite contains less than 0.1 percent of alpha-Cristobalite, tridymite, and alpha quartz.
- Zeolite – Consists of 100 percent of potassium-calcium-magnesium-aluminosilicate (CAS# 12173-10-3). The components include clinoptilolite zeolite/potassium, calcium, sodium, and aluminosilicate, hydrated (a).

7.2 Design and Sizing of Treatment Process and Units

The following sections summarize the treatment units used in the different areas of the Facility. The design of the Facility is based on meeting the conditions and treatment expectations of the Industrial Stormwater General Permit.

Water quality discharges from the site to surface waters are regulated by EFSEC, and that department administers the NPDES program for which this project is applying. The application requests that the water quality standards applied to this Facility be those described below. The intent of the Facility is to ensure compliance with the surface water quality standards by meeting the discharge limits of the Industrial Stormwater General Permit. Table 22 lists the anticipated water quality benchmarks.

Table 22. Anticipated Water Quality Benchmarks

Parameter	Average Monthly	Maximum Daily
Oil and Grease (mg/L)	10	15
TSS (mg/L)*	20	30
BTEX (ug/L)	–	100
Benzene (ug/L)	–	1.2
Total Copper (ug/L)		14
Total Zinc (ug/L)		117
	Daily Minimum	Daily Maximum
pH	6.0 standard units	9.0 standard units

*TSS=Total suspended solids

Water quality design is based on the online water quality flow rate developed using the WWHM version 3. All of the areas contributing to each stormwater treatment unit were modeled with the appropriate surface coverage identified. The model results provided the basis for the water quality design flows. In most cases, the water quality design flow used in the design was for the on-line 15-minute flow rate. The only modification to the water quality flow rate is at Area 300, where discharges from the containment area are maintained at the design flow rate of the oil-water separators located within the containment area.

Anticipated pollutant loadings and expected effluent concentrations are provided in Tables 25, 27, 30, and 32 below. The anticipated loadings were estimated using publicly available pollutant loading rates from stormwater case studies or previous engineering reports. A summary of the pollutant loading rates for each surfacing type included in the facility is included in Table 23 below. Source data and calculations are included in Appendix H.

Table 23. Pollutant Loadings for Each Facility Surface Type

Parameter	Building Roofs[1]	Driveway, Parking, and PG Industrial Yard[2]	NPGIS Industrial Yard[3]	Landscaping[4]	Sidewalks Pedestrian Areas[5]	Containment Areas[6]
Oil & Grease (mg/L)	-	-	-	-	-	8
TSS (mg/L)	17	228	96	37	173	23.7
BTEX (µg/L)	-	-	-	-	-	-
Benzene (µg/L)	-	-	-	-	-	1.2
Total Copper(µg/L)	7[7]	34	34[7]	94	17	6.4
Total Zinc(µg/L)	256[7]	224	150	263	107	43
pH	-	-	6	-	-	-
Ethylbenzene(µg/L)	-	-	-	-	-	1.0
Toluene (µg/L)	-	-	-	-	-	1.2

Notes:

1. Building Roofs for the Facility were modeled for pollutant loadings as "Roof Industrial". Source data is from Table B.5 as attached in the Urban Stormwater Retrofit Practices. TSS data is from the Industrial Roof land use, while copper and zinc concentrations were modified to the commercial roof land use. Commercial roof category was determined to be more accurate to reflect use of non-galvanized or copper roofing proposed by the Facility.

2. Driveways, parking areas, and pollution generating surfaces within the industrial yards such as mechanical and electrical equipment were modeled for pollutant loadings as "Parking Industrial". Source data is from Table B.5 of the attached Urban Stormwater Retrofit Practices.

3. Non-Pollution generating surfaces (background water quality) were modeled for pollutant loadings as "Industrial Yard". Source data is from Table 2 of the Terminal 4 Pond Particle Size Distr bution and Sample Analysis. TSS, and Total Zinc data was averaged from the four values for sample locations 1D and 1A. Copper was assumed to match Industrial yard/parking data from the Urban Stormwater Retrofit Practices. The Total copper values from the Terminal 4 Pond Particle Size Distribution and Sample Analysis was determined to be artificially high resulting from the test sample of 78 ug/L. An average of the remaining three values would yield 32 ug/L, less than what is assumed for these calculations.

4. Landscaping areas modeled for pollutant loadings as Landscaping. Source data is from Table B.5 of the attached Urban Stormwater Retrofit Practices.

5. Sidewalks and Pedestrian areas were modeled for pollutant loadings as "Driveway" areas. Source data is from Table B.5 of the attached Urban Stormwater Retrofit Practices.

6. Containment Area were modeled for pollutant loadings as "Tesoro Anacortes Stormwater". Source data is from Tables 4.1 and 4.3 "Storm Water to Ponds" from the attached Effluent Plant Treatment Efficiency Study and Engineering Report dated April 26, 2000.

7. Data in these fields were modified from default categories. See discussion of modifications in the land use descriptions and source data in Notes 1 through 6 above.

Descriptions of each treatment unit are included in the discussions of the relevant areas of the Facility. Detailed calculations are provided in Appendix H.

7.2.1 Area 200 – Unloading and Office

Stormwater from Area 200 will be discharged to the port's existing stormwater system in Terminal 5. Treated stormwater from the Facility will flow through the existing system to the stormwater pump station which pumps stormwater from Terminal 5 to treatment lagoons. To demonstrate water quality compliance, stormwater from the site will meet water quality discharge benchmarks at the Facility's connection to the port's stormwater system.

Stormwater will be discharged from Area 200 at three locations. Monitoring manholes are provided at all three connection points.

- The western connection (Discharge Location 1)will consist of runoff from the administration/support, West Boiler area, and the western half of the yard and roof from the rail unloading area.
- The central connection (Discharge Location 2) consists of runoff from the eastern half of the yard, rail spur, and a portion of the runoff from the Vanexco Cap drainage system.
- The eastern connection (Discharge Location 3) consists of stormwater collected from the eastern half of the rail unloading roof, runoff from NGL Supply, and the other portion of the Vanexco Cap drainage system.

The rail unloading facility directs stormwater only from its pollution-generating surfaces to the western and central connections. Treatment vaults will be provided at both locations and the proposed monitoring points are located immediately downstream of the vaults.

7.2.1.1 Water Quality Vault 0200-WQV-001

Stormwater contributing to water quality vault 0200-WQV-001 is generated from the office and administration area, the West Boiler, and the western portion of the rail unloading area. The following table summarizes the surface coverage contributing to the water quality vault for modeling with the WWHM. Stormwater is discharged from the water quality vault to Monitoring Point 1.

Table 24. Contributing Area to Water Quality Vault 0200-WQV-001

Surface Description	Existing Condition	WWHM Type	Area (acres)
West Boiler, Admin/Support Area, and West Portion of Industrial Yard			
Parking and Drive Aisle	Untreated Impervious	Roads/Flat	0.91
Buildings	Untreated Impervious	Roof Tops/Flat	0.17
Sidewalk/Walkways	Untreated Impervious	Sidewalks/Flat	0.02
Industrial Yard	Untreated Impervious	Parking/Flat	0.17
Landscaping	Untreated Impervious	A/B, Lawn, Flat	0.00
Total (West Boiler & Unloading and Office)			**1.27**

Stormwater modeling indicates that the water quality vault will need to treat an online flowrate of 0.20 cfs. Based upon the anticipated pollutant loading to this unit, a water quality vault containing media consisting of Metal Rx has been designed. Assuming a flow rate of 1 gpm/square foot of media, and an 18-inch media cartridge, a total of 12 cartridges is required to provide necessary water quality treatment.

The selected water quality vault will be a StormFilter vault provided by Contech Engineered Solutions with MetalRx media sized at a 1 gpm/square foot media surface area using 18-inch cartridges. The proposed vault currently includes provision for a total of 20 cartridges. Anticipated influent loadings, effluent concentrations for Monitoring Point 1 are summarized in the table below.

Table 25. Terminal 5 - Area 200 Monitoring Point 1 Summary

Pollutant	Influent Concentration	Effluent Concentration	Proposed Water Quality Standard
Oil and Grease	No visible sheen	No Visible sheen	15 mg/L
TSS (mg/l)	178	26.8	30
BTEX (ug/L)	<100	<100	100
Benzene (ug/L)	<1.2	<1.2	1.2
Total Copper (ug/L)	31.1	12.4	14
Total Zinc (ug/L)	217.3	86.9	117
Ethylbenzene (ug/L)	<1	<1	--
Toluene (ug/L)	<1.2	<1.2	--
pH	6	6	6.0-9.0

7.2.1.2 Water Quality Vault 0200-WQV-002

Stormwater contributing to water quality vault 0200-WQV-002 is generated from the eastern portion of the rail unloading area. The following table summarizes the applicable surface coverage contributing to the water quality vault for modeling with the WWHM. Stormwater is discharged from the water quality vault to a Monitoring Point 2.

The rail spur that is identified for on-site railcar and locomotive maintenance is located upstream of 0200-WQV-002. The area is part of the 1.25-acre industrial yard classification and has been modeled as fully impervious. The approximate 0.3-acre area is not anticipated to have an impact on downstream water quality. Rail containment pans and concrete surfacing will direct any stormwater through an oil-water separator that is designed for the 100-year, 24-hour storm event. A containment valve that will be closed during maintenance activities will prevent the inadvertent release of any spill. Significant operational BMPs are required in the attached operations SWPPP, including inspection of vehicles upon arrival, use of temporary spill prevention BMPs and drip pans, draining of all liquid containing parts, covered secondary containment leak proof containers for storage, and haul off of any waste liquids, including oils and lubricants.

Table 26. Contributing Area to 0200-WQV-002

Surface Description	Existing Condition	WWHM Type	Area (acres)
East Portion of Industrial Yard			
Sidewalk/Walkways	Untreated Impervious	Sidewalks/Flat	0.04
Industrial Yard	Untreated Impervious	Parking/Flat	1.25
Buildings	Untreated Impervious	Roof/Flat	0.05
Mechanical Equipment	Untreated Impervious	Roads/Flat	0.03
Total			**1.37**

Stormwater modeling indicates that the water quality vault will need to treat an online flowrate of 0.22 cfs. Based upon the anticipated pollutant loading, a water quality vault containing MetalRx media is designed. Assuming a flow rate of 1 gpm/square foot of media, and an 18-inch media cartridge, a total of 14 cartridges will be required to provide necessary water quality treatment.

The selected water quality vault will be a StormFilter vault provided by Contech Engineered Solutions with MetalRx media sized at a 1 gpm/square foot media surface area using 18-inch cartridges. The proposed vault currently includes provision for a total of 20 cartridges. Anticipated influent loadings, effluent concentrations for Monitoring Point 2 are summarized in the table below.

Table 27. Terminal 5 - Area 200 Monitoring Point 2 Summary

Pollutant	Influent Concentration	Effluent Concentration	Proposed Water Quality Standard
Oil and Grease	No visible sheen	No visible sheen	10 mg/L
TSS (mg/l)	98.2	14.7	30
BTEX (ug/L)	<100	<100	100
Benzene (ug/L)	<1.0	<1.0	1.2
Total Copper (ug/L)	32.6	13.0	14
Total Zinc (ug/L)	154.1	61.6	117
Benzene (ug/L)	<1.	<1.	1.0
Ethylbenzene (ug/L)	<1	<1	--
Toluene (ug/L)	<1.2	<1.2	--
pH	6	6	6.0-9.0

There is no publicly available data to characterize the existing stormwater pollutants that are currently collected atop the Vanexco Cap, or in the drainage system downstream of NGL Supply and Old Lower River Road. The facility is proposing to re-route the existing stormwater flows through the Facility area, and preserve the ultimate drainage patterns into the downstream system. The Facility will discharge the roof runoff from the eastern portion of the rail unloading building into this drainage system. However, because no Facility-related pollution-generating surfaces are proposed to contribute to this drainage system, treatment systems are not proposed.

7.2.2 Area 300 – Storage

Stormwater from Area 300 will be discharged to the Port's existing stormwater system in Terminal 4. A separate project will separate Port tenant stormwater from the port's general use areas, resulting in tenant stormwater bypassing the Terminal 4 stormwater treatment pond. Stormwater from the site must meet water quality discharge benchmarks at the Facility's connection to the port's stormwater system.

Stormwater is discharged from Area 300 at two connection points, both installed with monitoring manholes upstream. The location of the western connection (identified as Discharge Location 4) is the only connection at Area 300 in which stormwater from the pollution-generating surfaces is discharged after treatment. The eastern connection (Discharge Location 5) handles roof runoff from the two easternmost product storage tanks.

Treatment for this area consists of oil-water separation, volatile organics (BTEX) treatment, and a water quality vault to achieve water quality standards.

The water quality vault is a StormFilter vaults provided by Contech Engineered Solutions. The vault will be equipped with ZPG media sized at a 1 gpm/square foot media surface area. The BTEX treatment vault is equipped with GAC and the other vault will contain GAC sized at a 1 gpm/square foot media surface area.

7.2.2.1 Containment Area Oil Water Separators: 0300-OWS-001 AND 0300-OWS-002

Stormwater from the containment area will be collected through spill trapped catch basins and processed through an API-baffle-style control structure prior to reaching the oil-water separators. The oil-water separators are designed to separate oil particles down to 60-microns. The design assumed an API gravity of 12 degrees, which has a specific gravity of 0.986. API 12 is considered a medium weight crude, lighter crudes have higher API degree classifications. Crude oils with higher API gravities, such as Bakken Crude, separate more quickly and reduce particle size even more. The design of the system assumed

that no reduction of volatile organics, such as BTEX, occurs through the oil-water separators. The detailed calculations for the oil-water separators are attached in Appendix G.

7.2.2.2 Containment Area BTEX: 0300-WQV-002

Stormwater discharging from the containment area may be subject to minor drips from valve maintenance and flanges. Stormwater constituents from the containment area were developed from a sample facility report provided to Ecology as part of the treatment system efficacy study completed by Tesoro for its Anacortes refinery. Although stormwater from that containment area showed BTEX results compliant with the water quality limit without treatment, treatment is proposed at this Facility to address concerns raised by agency staff.

The removal rates of BTEX through GAC are well documented. GAC is used in industrial and residential applications to treat volatile organics in drinking water. The removal rates of BTEX in GAC is a logarithmic function with the best removal rates occurring at higher influent concentrations, and diminishing at low concentrations. On average, the GAC removal efficiency at the human health criteria of 1.2 µg/L is approximately 40 percent. Also, removal of BTEX is shown to be far more effective than doubled when GAC is used in sequence. For this reason, GAC is proposed in in the first water quality vaults downstream of the containment area. The second water quality vault includes ZPG media system, which contains a percentage of GAC in its media. The following table summarizes the contributing area to 0300-WQV-002

Table 28. Contributing Area to 0300-WQV-002

Surface Description	Existing Condition	WWHM Type	Area (acres)
Containment Area Stormwater			
Containment Yard Area	Untreated Impervious	Roads/Flat	12.0

Flowrates leaving the containment area are restricted to a maximum of 880 gpm at the control structure and at the discharge pumps. This flow rate is used to size the BTEX 0300-WQV-002. Assuming a flow rate of 1 gpm/square foot of media, and a 27-inch media cartridge, a total of 79 cartridges is required to provide necessary water quality treatment.

The selected water quality vault will be a StormFilter vault provided by Contech Engineered Solutions with GAC media sized at a 1 gpm/square foot media surface area using 27-inch cartridges. The proposed vault currently includes provision for a total of 87 cartridges.

7.2.2.3 Storage Area Water Quality Vaults: 0300-WQV-001

Stormwater contributing to water quality vaults 0300-WQV-001 is generated from the containment area and the parking/support area of the Storage Area. The following table summarizes the applicable surface coverage contributing to the water quality vault for modeling with the WWHM. Stormwater is treated through both of the water quality vaults in series. Discharge from the water quality vaults is routed to a Monitoring Point 3 for water quality compliance monitoring.

Table 29. Contributing Area to 0300-WQV-001

Surface Description	Existing Condition	WWHM Type	Area (acres)
Containment Area Stormwater			
Containment Yard Area	Untreated Impervious	Roads/Flat	11.96
Storage Area - Support Buildings, Parking, and Industrial Yard			
Landscaping	Untreated Impervious	A/B, Lawn, Flat	0.36
Support Buildings	Untreated Impervious	Roof Tops/Flat	0.09

Surface Description	Existing Condition	WWHM Type	Area (acres)
Sidewalks	Untreated Impervious	Sidewalks/Flat	0.05
Parking Area /Drive Aisle	Untreated Impervious	Roads/Flat	0.57
Industrial yard	Untreated Impervious	Parking Flat	0.57
Total			**13.60**

Stormwater modeling indicates that the water quality vault will need to treat an on-line flowrate of 2.13 cfs. Based upon the anticipated pollutant loading the unit contains ZPG media composed primarily of zeolite, perlite, and granulated active carbon. Assuming a flow rate of 1 gpm/square foot of media, and a 27-inch media cartridge a total of 85 cartridges are required to provide necessary water quality treatment.

The selected water quality vault will be a StormFilter vault provided by Contech Engineered Solutions with ZPG media sized at a 1 gpm/square foot media surface area using 27-inch cartridges. The proposed vault currently includes provision for a total of 87 cartridges. The product received its General Use Level Designation for Basic (TSS) treatment from Ecology in January 2013. Anticipated influent loadings, effluent concentrations for Monitoring Point 3 are summarized in the table below.

Table 30. Area 300 – Monitoring Point 3 Summary

Pollutant	Influent Concentration	Effluent Concentration	Proposed Water Quality Standard
Oil and Grease	No visible sheen	No Visible sheen	10 mg/L
Total Suspended Solids (TSS) (mg/l)	35.1	8.8	30
BTEX (ug/L)	<100	<100	100
Benzene (ug/L)	1.1	0.83	1.0
Total Copper (ug/L)	9.2	5.5	14
Total Zinc (ug/L)	573	34.4	117
Ethylbenzene (ug/L)	0.9	0.7	–
Toluene (ug/L)	1.1	0.8	–
pH	6.0	6.0	6.0-9.0

7.2.2.4 Pump Basin Oil Water Separator: 0300-OWS-003

Stormwater from the pump basin will be collected in a sump located in the southwest corner. A containment valve will be closed during all maintenance operations. Under normal operations, flow from the basin will be processed through a coalescing plate oil-water separators. The oil-water separator was selected for the 25-year flow. Discharges from the oil-water separator are to the City's sanitary sewer.

7.2.3 Area 400 – Marine Terminal

Stormwater from Area 400 will be discharged to the port's existing biofiltration and bioinfiltration swales. Due to the proximity to the Columbia River and shallow depths to groundwater, treatment will be provided in advance of the swales. Water quality monitoring is not readily feasible through a monitoring manhole for the portion of the site that sheet flows through the media filter drain into the bioinfiltration swales. The area of most concern for water quality is the stormwater from the containment area located at the dock. A monitoring manhole will be provided upstream of the discharge location to the biofiltration swales.

Treatment for this area will consist of media filter drain for the upland parking and drive aisle areas, and oil-water separation and water quality filters for the dock area. Note that in the event of a spill or discharge into the containment area, the spilled product will be cleaned and disposed of through the spill

response program. Treatment in this area is solely for normal operations in which all spill prevention measures are functioning properly.

Dock Containment Area: 0400-OWS-001

Stormwater from the containment area will be collected through sumps and inlets located at the face of the dock. Gravity pipelines will transfer stormwater from the containment area to the treatment units onshore. Containment valves at the face of the dock will be closed during all loading operations. When loading operations are complete or if a vessel is not berthed at the Facility, the valves will remain open. If there is a visible sheen on the water surface following loading activities, spill containment measures will be used to clean up the oil residues before the release of the captured stormwater.

Stormwater from the containment area will be processed through a coalescing plate oil-water separator. The oil-water separator was selected for the 25-year flow. Discharges from the oil-water separator are to the downstream water quality vault. The detailed calculation for the oil-water separator is attached in Appendix I.

Marine Terminal Water Quality Vault: 0400-WGV-001 and 0400-WQV-002

Stormwater contributing to the water quality vault is directly from the oil-water separator above. The following table summarizes the applicable surface coverage contributing to the water quality vault for modeling with the WWHM. Discharge from the water quality vault is routed to a small pump station, which discharges to a monitoring manhole for water quality compliance monitoring.

Table 31. Contributing Area to 0400-WQV-001 and 0400-WQV-002

Surface Description	Existing Condition	WWHM Type	Area (acres)
Marine Terminal – Containment Area			
Loading Containment Area	Untreated Impervious	Roads/Flat	0.09
Total			0.09

Stormwater modeling indicates that the water quality vault will need to treat an on-line flowrate of 0.02 cfs. Based upon the anticipated pollutant loading concerns from the T-dock containment area two water quality vaults are designed; the first the unit containing ZPG media composed of zeolite, perlite and granulated active carbon and the second unit containing GAC. Assuming a flow rate of 1 gpm/square foot of media, and an 18-inch media cartridge, a total of 2 cartridges per vault are required to provide necessary water quality treatment.

The selected water quality vaults will be a StormFilter vault provided by Contech Engineered Solutions with ZPG and GAC media sized at a 1 gpm/square foot media surface area using 18-inch cartridges. The currently proposed vaults include provisions for a total of 4 cartridges each. The product received its General Use Level Designation for Basic (TSS) treatment from Ecology in January 2013.

Stormwater from the dock containment area at the Marine Terminal will be treated with the above BMPs. The media filter received its General Use Level Designation for Enhanced treatment from Ecology in February 2013. Anticipated influent loadings, effluent concentrations for Monitoring Point 4 are summarized in Table 32 below.

Table 32. Marine Terminal Area 400 Monitoring Point 4 Summary

Pollutant	Influent Concentration	Effluent Concentration	Proposed Water Quality Standard
Oil and Grease	No visible sheen	No Visible sheen	No Visible Sheen
Total Suspended Solids (TSS) (mg/l)	23.7	3.6	-
BTEX (ug/L)	<100	<100	100
Benzene (ug/L)	1.2	0.7	1.2
Total Copper (ug/L)	6.4	3.2	-
Total Zinc (ug/L)	43	21.5	-
Ethylbenzene (ug/L)	1.0 ug/l	0.6	--
Toluene (ug/L)	1.2 ug/l	0.7	--
pH	6.0	6.0	6.0-9.0

Stormwater from the tenant improvement areas at the Marine Terminal will sheet flow to the media filter drain for treatment. The media filter received its General Use Level Designation for Enhanced treatment from Ecology in February 2013.

7.2.4 Area 500 – Transfer Pipelines

Facility-specific stormwater systems and treatment are not proposed for the transfer pipeline area. The transfer pipelines will be located in a non-exclusive easement and are considered to be located in the port's general use area. Spill traps will be installed in all immediately adjacent stormwater inlets along the alignment. Treatment for these areas will be provided by the port's system and permitted under the port's existing stormwater permits discussed in section 1.4.1.

7.2.5 Area 600 – West Boiler

Treatment for the West Boiler will be provided further downstream in Area 200. See section 7.2.1 for details.

7.2.6 Rail Infrastructure

Facility-specific stormwater systems and treatment are not proposed for the rail infrastructure. The rail corridor will be located within the port's existing rail transportation corridor, which was master-planned as part of the WVFA project. A stormwater analysis and report completed for that project is attached in Appendix D. Collection, conveyance, and treatment systems were constructed and/or reviewed as part of that project. Spill traps will be installed in all immediately adjacent stormwater inlets along the alignment. Treatment for this area will be provided by the Port's system and permitted under the existing permits discussed in Section 1.4.1.

7.3 Site Suitability

The site as designed is suitable for the proposed transload facility. The extensive source controls and treatment technologies employed can provide stormwater quality meeting the anticipated discharge requirements. Additional structural and operational oil and hazardous material spill control and prevention measures are discussed in section 6. Site-specific operations and construction SWPPPs have also been completed.

7.4 Treatment Process Operation

The treatment processes proposed during Facility operation are designed to be passive systems. Passive systems are designed to require minimal operational input and rely upon hydraulics to provide treatment. Due to the passive systems selected, no process operational procedures are required. The proposed sampling and monitoring plan is included in the operations SWPPP submitted under separate cover. Detailed discussions of how the treatment BMPs will operate and of the required maintenance activities are provided with the operations SWPPP.

7.5 Treatment Bypasses

To the maximum extent possible, the proposed treatment systems are designed using on-line water quality flow rates and volumes, and have been placed in-line with the stormwater flow. The design of the water quality vaults considered high-flow rates to ensure that the 100-year design storm could be conveyed safely through the structures. Even during design storms in excess of the water quality storm, the filter vault will continue to treat the water quality storm flow rate.

The only sources of stormwater not directed toward water quality treatment units are:

- Storage tank roof runoff
- Rail unloading facility roof
- Small portions of on-site landscaped areas
- Off-site stormwater from the Vanexco Cap
- Off-site stormwater from NGL Supply propane terminal
- Driveway areas immediately adjacent to roadways where the grade did not permit on-site flow

The sources above consist primarily of on-site non-pollution generating surfaces which do not require treatment, landscaped areas which naturally flow to adjacent parcels, previously installed adjacent tenant stormwater, and minor use driveway areas infeasible to collect stormwater on site. All of the pollution-generating surfaces located within the control of the Facility are treated on site prior to discharge.

8. Operational Quantity and Quality of Industrial Water and Process Wastewater

This section summarizes the design of the industrial water and process wastewater system, including a description of the water supply, use, pretreatment, and discharge locations. The downstream municipal conveyance and treatment systems are discussed in detail in section 13. A process flow diagram for the process water uses and wastewater is shown in Figure 9.

8.1 Water Supply

The Facility will require a water supply for process water and emergency fire suppression water. The Applicant proposes to obtain all water required for the Facility from the City's water utility. The Facility would not require the development of new water sources. The City's existing water distribution facilities are adjacent to or located on the site. The Facility would connect to the City's existing water distribution network and multiple water service connections would be constructed to serve the discontinuous Facility areas. These water supply connections would be constructed in accordance with the City's water design and construction requirements. Necessary water metering and cross-connection control would be installed at each of the connection locations between the on-site water facilities and the public water distribution system. Figure 10 illustrates the existing City water distribution network at the Facility site.

Copyright © BergerABAM. All Rights Reserved.

C.2 PROCESS SCHEMATIC FOR WASTEWATER DISCHARGES

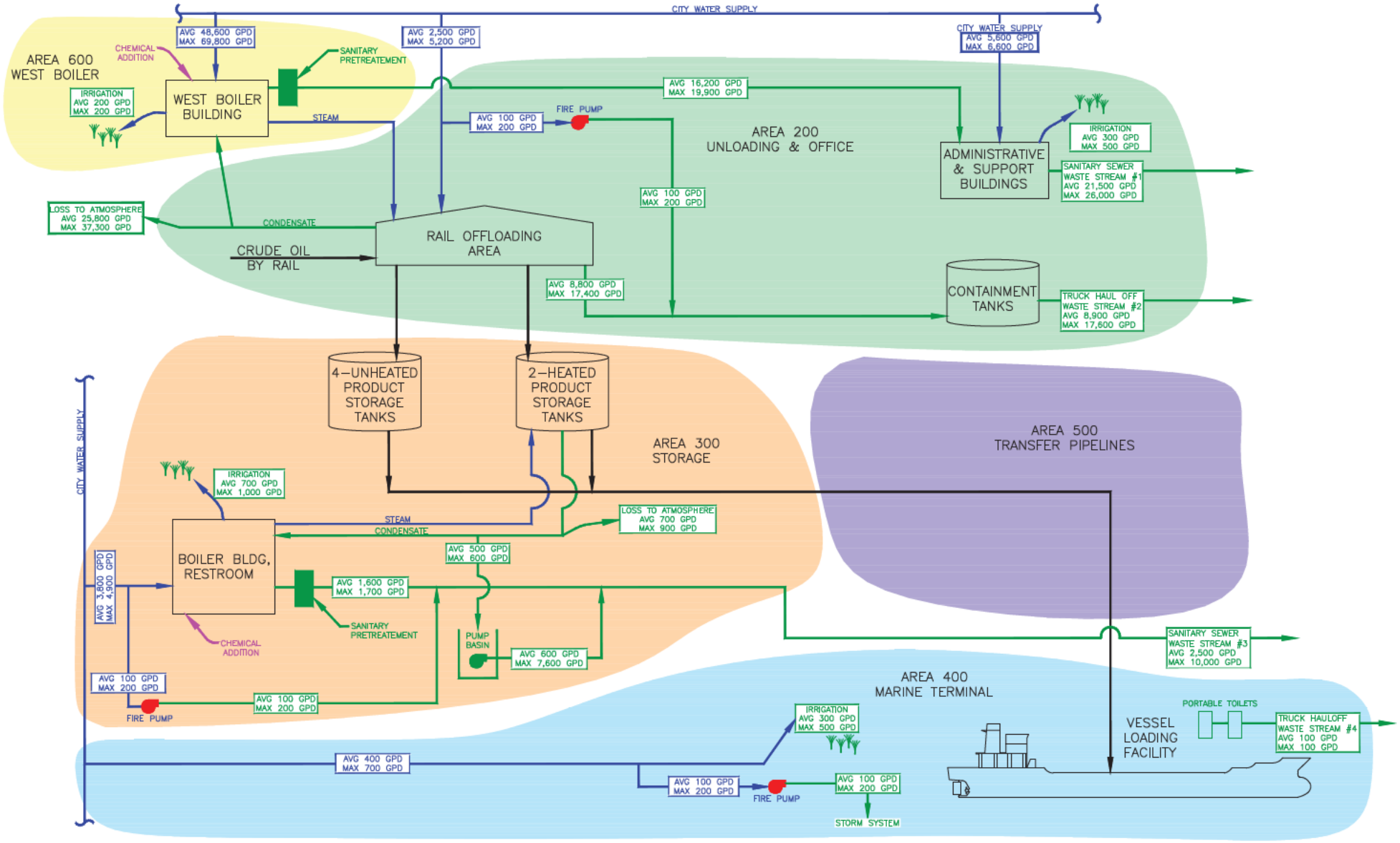

Last Saved by: Tony.pritchett on: Aug 20, 2013 2:57 PM File: Q:\Vancouver\2013\A13.0267\CADD\Dwgs\PRE-APP\PROCESS SCHEMATIC - WASTEWATER DISCHARGES.dwg

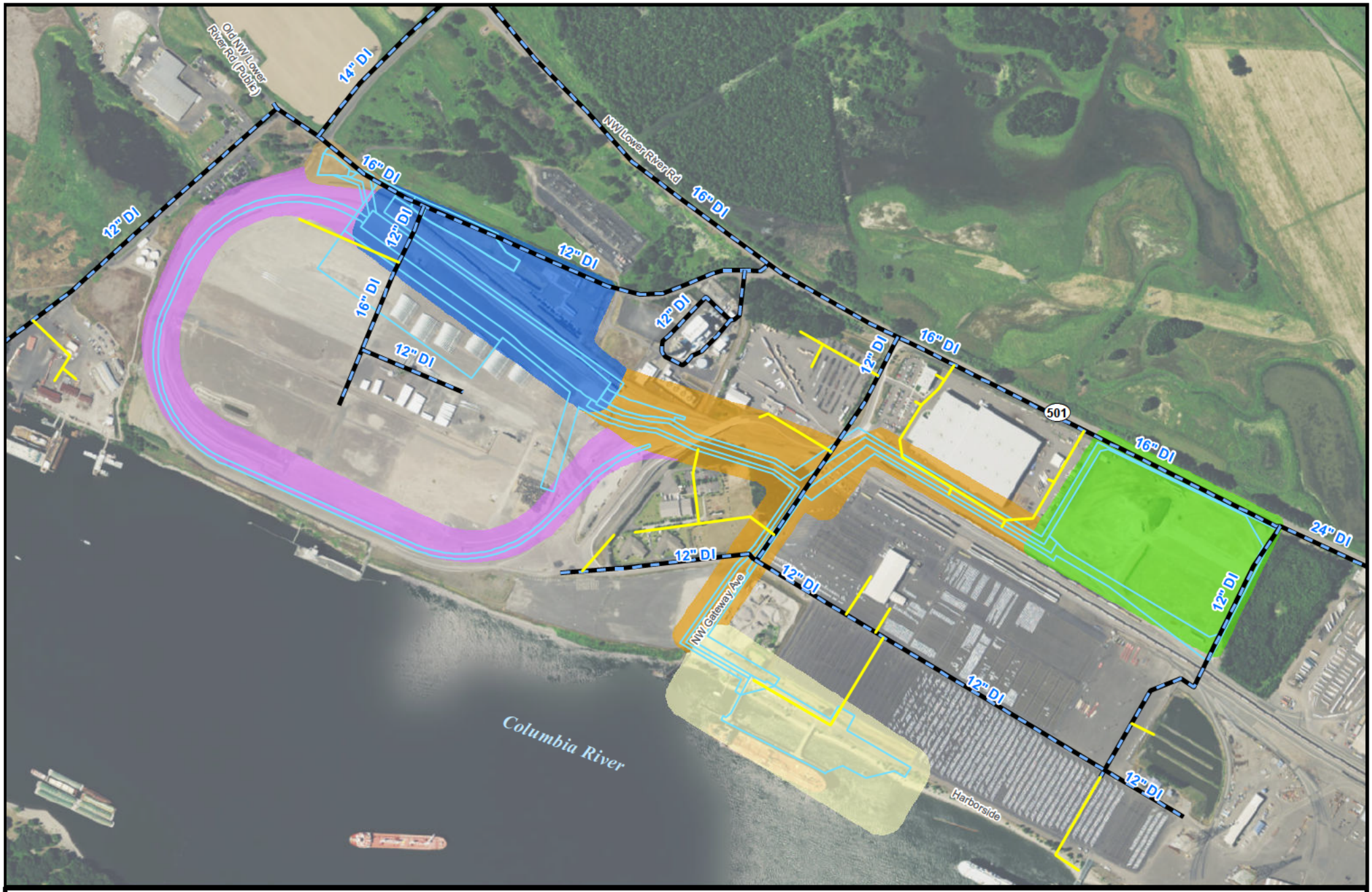

LEGEND

- Site Boundary
- Transmission Mains
- Distribution Mains

Vancouver Energy Improvement Areas

- 200 - Unloading and Office
- 300 - Storage
- 400 - Marine Terminal
- 500 - Transfer Pipelines
- 600 - West Boiler
- Rail Infrastructure

Figure 10. City of Vancouver Water System

N

0 500 1,000 1,500 2,000 Feet

8.2 Process Water

Industrial processes at the Facility are limited to the transfer and storage of crude oil. Process water use at the Facility would consist of water required at Area 600, West Boiler, miscellaneous part and equipment wash, and cooling water used during operation of the fire suppression pumps. The anticipated maximum process water demand per day is approximately 52.2 gpm. Table 33 summarizes water use locations and rates for the Facility. The annual water usage would vary based on the density and viscosity of the raw crude oil, the volume of crude requiring heat, and ambient air temperatures (lower ambient temperatures would require higher water usage).

Table 33. Process Water uses and Usage Rates

Industrial Process	Average Water Use (gpd)	Maximum Water Use (gpd)
Area 200		
Miscellaneous part/equipment wash[a]	2,400	5,000
Fire pump[b]	100	200
Area 300 fire pump[b]	100	200
Area 400 fire pump[b]	100	200
Area 600 boiler building	48,400	69,600
Total process water	51,100	75,200

[a] Pressure washer rated at 5 gpm, with conservative usage assumptions.
[b] Averaged considering weekly 30-minute maintenance cycling at 35 gpm, and annual pump testing.

The boiler plant in Area 600 would provide steam to heat certain grades of crude oil within the railcars. The majority of the process water used to make steam would be maintained in a closed-loop system. However, some process water for the boilers would be necessary for makeup water to replenish the equivalent of steam lost in the system, blowdown water, cooling water, and treatment of the input municipal water to boiler use specifications.

Area 200 (Unloading and Office), Area 300 (Storage), and Area 400 (Marine Terminal) would be protected with emergency fire pumps. These pumps would be equipped with a heat exchanger and cooling water supply to maintain operational engine temperatures. Fire pumps would be maintained on a weekly basis and tested once a year to ensure operability for fire response. Occasional make-up water is necessary during fire pump maintenance cycling.

8.3 Process Wastewater

The Facility would generate approximately 19 gpm of process wastewater from primarily boiler and condensate blowdown. Depending on its source, process wastewater would be either: collected, stored on site, and hauled to an approved disposal location; treated and discharged to stormwater; or pretreated and discharged to the City's sanitary sewer.

New wastewater sources would be connected to the existing public sanitary sewer via a combination of new gravity and pressure sewer lines. Discharge to the City sewer would occur at two locations—one source, located just north of the administrative and support buildings (Area 200), would discharge into an existing 18-inch-diameter gravity sewer; and a second, located just south of the Area 300 (Storage), would discharge into an existing 18-inch-diameter gravity sewer. All process wastewater discharged from the Facility into the City's sanitary sewer system would undergo pretreatment to ensure compliance with the City's pretreatment program. Table 34 summarizes the process wastewater sources.

Table 34. Process Wastewater Sources

Wastewater Stream	Average Water Use (gpd)	Maximum Water Use (gpd)
Area 200		
Miscellaneous part/equipment wash	2,400[a]	5,000[a]
Fire pump cooling water	100[a]	200[a]
Area 300		
Pump basin sump effluent	100[b]	7,000[b]
Fire pump cooling water	100	200
Area 400 fire pump cooling water	100[a]	200[a]
Area 600 boiler building effluent	16,200	19,900
Sanitary wastewater total process wastewater	**19,000**	**32,500**
Total process wastewater to sanitary sewer	**16,400**	**27,100**

[a] Process water discharged to stormwater system for treatment or stored onsite and hauled offsite for disposal.

[b] Waste flows from this basin are calculated assuming (at this time) that the basin is not covered. Average day flows were calculated distributing the annual rainfall total of 38.9 inches per year to determine gallons per day. Maximum rainfall was calculated using the 100-year storm rainfall event of 4.5 inches per day.

Final treatment of all process wastewater discharged from the Facility to the public sanitary sewer would be done at the City's existing wastewater treatment plant. No treatment process modifications at the wastewater treatment plant would be necessary to accommodate the proposed Facility. On-site pretreatment would be conducted per the requirements of the City's industrial wastewater pretreatment ordinance VMC 14.10.110. Process wastewater streams requiring pretreatment include blowdown and condensate discharges from the Area 600 boilers. Pretreatment processes for these waste streams would be designed and furnished by the boiler manufacturer in accordance with industry practices.

8.3.1 Area 200 Miscellaneous Part/Equipment Wash

Miscellaneous part and equipment washing would be conducted in a designated area located in Area 200 (Unloading and Office). Wash water would be generated from a single 5-gpm pressure washer and would be collected and conveyed to the containment tanks at the unloading facility. Contents of the containment tanks would be discharged to a mobile vacuum truck and taken to an approved facility for recycling or disposal. This wash water includes an allowance for possible railcar exterior washing as described in section 6.1.6.

Intermittent non-process wastewater originating from within the unloading area could include rainwater that enters the structure from railcars and is blown in at the sides, entry and exits, and fire retardant foam released by the fire suppression system during routine maintenance. Containment drip pans and secondary containment trenches would be installed between, and adjacent to, the tracks of the railcar unloading structure to capture any rainwater, inadvertently released oil, and fire retardant, and would be directed to sump pumps installed at low points within each containment trench. The sump pumping system would transfer such non-process wastewater to the unloading facility containment tanks where it would be removed by a vacuum truck or pumped out of the tanks and hauled off site to a licensed and approved disposal facility.

As noted previously, flexible vent hoses connected to a valve at the top of the car would be used to collect vapors as crude oil drains from the car to the collection header. These vapors, and any condensate they may contain, would be returned to the tank car, and would not be discharged to any process water streams.

8.3.2 Area 600 Boiler Effluent

The Area 600 boiler plant is expected to produce continuous blowdown when in operation, with discharge flow rates fluctuating depending on steam demand. There will be three 1,500 boiler horse power (BHP) boilers with one on standby. The two boilers operating will generate approximately 103,500 pounds per hour of steam. The discharge values are based upon the maximum discharge condition, which is based upon a 4 percent boiler blowdown rate with 25 percent steam condensate lost. With those values, the the maximum day discharges are as follows.

- Water usage: 69,640 GPD
- Discharge to Sanitary Sewer: 19,940 GPD
- Loss to Atmosphere (steam): 37,275 GPD
- Condensate Discharge for Haul Off: 12,425 GPD

Blowdown temperature at the boiler plant would be lowered to permit allowable levels with a cooling system that uses potable water as the coolant. Coolant water would be mixed along with the boiler blowdown. The approximate constituent concentrations in the boiler effluent process wastewater are summarized in the tables below. A small sanitary sewer pump station is necessary to convey wastewater from the west boiler building in Area 600 to the discharge location near the administrative and support buildings in Area 200.

Table 35. Anticipated Effluent Constituents

Parameter	Minimum	Maximum
Conductivity	1,000 mmhos	1,200 mmhos
pH	8	12
Nitrate + Nitrite-N as N	<0.52 mg/L	<1 mg/L
Calcium	0.5 mg/L	125 mg/L
Chloride	9.3 mg/L	6,000 mg/L
Sodium	5,880 mg/L	6,000 mg/L
Sulfate	0.72 mg/L	15 mg/L
Barium	-	<0.4 mg/L
Cadmium	-	<0.04 mg/L
Chromium	-	<0.01 mg/L
Copper	0.2 mg/L	4 mg/L
Lead	<0.2 mg/L	<0.2 mg/L
Molybdenum	<0.1 mg/L	<0.1 mg/L
Nickel	<1 mg/L	<1 mg/L
Zinc	0.2 mg/L	0.2 mg/L

Actual effluent testing has not been completed for this project. The anticipated supplier of boiler plant conditioning chemicals and pretreatment supplier reviewed the City of Vancouver's domestic water constituents and conducted an analysis to determine approximate effluent water quality. The results of that analysis for the boiler blowdown and softener backwash are summarized below.

Table 36. Detailed Effluent Analysis Summary

Parameter	Boiler Blowdown	Softener Backwash	Units
Ph	10.2	8	
Conductivity	1,200	1,000	Mmhos

Parameter	Boiler Blowdown	Softener Backwash	Units
Alkaklnity	336	120	mg/L
Hardness	14	500	mg/L as $CaCO_3$
Polyacrylate	250	0	mg/L
Aluminum	<0.1	<0.1	mg/L
Barium	<0.4	<0.4	mg/L
Boron	<0.1	<0.1	mg/L
Bromide	<0.2	<0.2	mg/L
Cadmium	<0.04	<0.04	mg/L
Calcium	0.5	125	mg/L
Chloride	9.3	6,000	mg/L
Chromium	<0.01	<0.01	mg/L
Copper	4	0.2	mg/L
Iron	2	0.1	mg/L
Lead	<0.2	<0.2	mg/L
Lithium	<0.01	<0.01	mg/L
Magnesium	3	50	mg/L
Manganese	<0.01	<0.01	mg/L
Molymbdenum	<0.1	<0.2	mg/L
Nickel	<1	<1	mg/L
Nitrate	0.8	0.32	mg/L
Nitrite	<0.2	<0.2	mg/L
Phosphorus	1	1	mg/L
Potassium	59	59	mg/L
Silica	150	54	mg/L
Sodium	5,880	6,000	mg/L
Strontium	0.1	0.1	mg/L
Sulfate	15	0.72	mg/L
Sulfite	40	<0.2	mg/L
Vanadium	<1	<1	mg/L
Zinc	0.2	0.2	mg/L

Wastewater from the boiler will be treated and cooled as necessary to comply with the local, state, and federal pretreatment standards. As discussed in section 13, following treatment wastewaters will be discharged through small private pump station to Area 200. The wastewater will additionally be treated in Area 200 through an oil-water separator designed for the maximum flow. Following the oil-water separator process, wastewater will be comingled with the domestic sewer discharged from Area 200 in a monitoring manhole prior to discharge to the City's sewer collection system.

8.3.3 Area 300 Basin Sump Effluent

Area 300 would have a concrete pump basin equipped with a sump and discharge to sanitary sewer. Stormwater from the pump basin will be collected in a sump located in the southwest corner. A containment valve will be closed during all maintenance operations. Under normal operations, flow from the basin will be processed through coalescing plate oil-water separators. The oil-water separator was selected for the 25-year, 24-hour storm event. The gravity sewer extending from this basin will be treated through a coalescing plate oil-water separator prior to discharge. Equipment within the pump basin

includes pumps, piping, valving, and appurtenances necessary to transfer crude oil from the product storage tanks to Area 400.

8.3.4 Areas 200, 300, and 400 Fire Pump Cooling Water

Non-contact cooling water from the fire pumps would be discharged once a week during a 30-minute maintenance cycle. This water would be discharged from areas 200, 300, and 400 into containment tanks, the sanitary sewer, and stormwater system, respectively.

9. Domestic Water and Wastewater

This section summarizes the design of the domestic water and wastewater system, including a description of the water supply, use, and discharge locations. The downstream municipal conveyance and treatment systems are discussed in detail in section 13.

9.1 Water Supply

The Facility will require a water supply for potable water and other domestic uses. The Applicant proposes to obtain all water required for the Facility from the City's water utility. The Facility would not require the development of new water sources. The City's existing water distribution facilities are adjacent to or located on the site. The Facility would connect to the City's existing water distribution network and multiple water service connections would be constructed to serve the discontinuous Facility areas. These water supply connections would be constructed in accordance with the City's water design and construction requirements. Necessary water metering and cross-connection control would be installed at each of the connection locations between the on-site water facilities and the public water distribution system.

9.2 Potable Water

Potable water for the Facility is limited to the amount needed to serve general kitchen and restroom facilities at the administrative and support buildings (Area 200), future restrooms inside the storage building (Area 300), and landscaping irrigation at areas 200, 300, 400, and 600. Table 37 indicates potable water uses and rates. The maximum daily potable water demand is equivalent to the need for 10.3 gpm. The annual water usage would vary based on ambient air temperatures and rainfall, with lower ambient temperatures and higher rainfall requiring less irrigation water usage.

Table 37. Potable Water uses and Usage Rates

Industrial Process	Average Water Use (gpd)	Maximum Water Use (gpd)
Area 200 administrative and support buildings[a, b]	5,400	6,250
Area 300 storage building[b]	5,000	6,750
Area 400 future domestic[c]	800	1,250
Area 600 landscaping irrigation	500	650
Total potable water	11,700	14,900

[a] The volume of 35 gpd for industrial factory sewer rates is based on Table G2-2, Design Basis for New Sewage Works (Ecology 2008) with an additional 15 gpd.

[b] Assumption of 116 employees using facilities in Area 200, 4 employees in Area 300 with other sanitary uses, and 10 employees in Area 400 with other sanitary uses.

[c] Potable water use is conservatively inflated in areas 300 and 400 for possible reallocation of staffing resources over time.

9.3 Domestic Wastewater

The Facility would generate approximately 5 gpm of domestic wastewater. Domestic wastewater would be discharged to the City's sanitary sewer.

New domestic wastewater sources would be connected to the existing public sanitary sewer via a combination of new gravity and pressure sewer lines. Discharge to the City sewer would occur at two locations—one source, located just north of Area 200, would discharge into an existing 18-inch-diameter gravity sewer; and a second, located just south of the Area 300, would discharge into an existing 18-inch-diameter gravity sewer.

Domestic wastewater, which would be generated from administrative and support buildings in Area 200 and the storage building in Area 300, would consist primarily of domestic waste from kitchen/break room, restroom facilities, and shower areas. No pretreatment is proposed at these locations. Discharges from both the administrative and support buildings and the storage building restroom would be discharged directly to the sanitary sewer. Area 400 employees would use portable toilets located in that area. The wastewater from Area 400 would be hauled off site for treatment and disposal. Table 38 summarizes the daily flows from each of these sources.

Table 38. Domestic Wastewater Sources

Wastewater Stream	Average Water Use (gpd)	Maximum Water Use (gpd)
Area 200 administrative and support buildings	5,300	6,100
Area 300 storage building[b]	500	750
Area 400 domestic use[b]	500[a]	750[a]
Total domestic wastewater	6,300	7,600
Domestic wastewater to sanitary sewer	5,800	6,850

[a] Domestic wastewater stored on site and hauled off site for disposal.
[b] Wastewater production at areas 300 and 400 increased over assumed employee concentrations of 4 and 10, respectively, to allow for staffing reallocation in the future.

10. Oil and Hazardous Material Spill Control or Accidental Discharge Prevention

Draft spill pollution control and countermeasures and contingency plans were prepared and submitted to EFSEC as part of the permitting process. Updates to these plans will be provided as project design continues and additional site-specific data becomes available. The provisions discussed in these plans prevent and control material spills and accidental discharges of material to the storm drain system.

The primary protection against accidental discharges is conservative design with multiple failsafes to prevent and mitigate for possible equipment or operational malfunction. The systems are designed with equipment redundancy to mitigate for possible equipment malfunction, the conveyance pipelines and tanks are designed for pressures and temperatures in excess of anticipated operating ranges, and physical monitoring and telemetry devices are employed to provide operators with real-time data to ensure that the Facility operates as designed.

In the unlikely event of an accidental discharge or failure, containment and control measures will be in place to capture any discharge and mitigate its effects. Emergency stop buttons located in crucial parts of the operation will shut operations down either in the immediate area or plant-wide, depending on the severity of the incident. Automatic and manual valves will isolate sections of the plant to reduce the

amount discharged. Spill cleanup kits, booms, and absorbent material will be located throughout the Facility for quick deployment.

As discussed above, the Facility's storm system is additionally designed to capture and remove oils from the stormwater in the unlikely event that a discharge reaches the stormwater system before the spill control valves can be shut. Any spilled product or hazardous material will be collected, along with any contaminated media, and hauled off site for legal disposal.

11. Receiving Water Description

In accordance with the EFSEC letter dated 6 February 2014 directing the scope of this engineering report, the analysis is limited to the discharge location at the point at which the Facility connects the on-site stormwater system to the Port's existing system. A description of the downstream municipal treatment system is included in section 13. A complete description of the downstream stormwater system is included in section 1.4.1. The following is a brief description of the discharge locations for the downstream systems to the Columbia River.

11.1 Location of Discharge

The Terminal 4 stormwater system discharges to the Columbia River at a single outfall southeast of the Terminal 4 water quality pond at Berth 9. The Port's mapping identifies the outfall as T4O. Figure 3 shows its location.

The Terminal 5 stormwater system has two outfalls to the Columbia River. The outfall located immediately west of Berth 17 is an overflow to the port's on-site stormwater pump station and has capacity to serve a future tenant located at Berth 17. The pump station pumps on-site stormwater to existing treatment lagoons located west of Terminal 5. The outfall for the lagoons is located immediately south of the western edge of the lagoons. Figure 4 shows the location of the two outfalls.

11.2 Water Quality

Multiple government agencies and non-governmental organizations monitor water quality levels within the Columbia River. The U.S. Geological Service (USGS) is the federal agency responsible for conducting water quality testing in the Columbia River. In 2004–2005, the USGS conducted water column samples. Significant findings of the Water Quality Data, Columbia River Estuary 2004-05 report are summarized below.

- None of the aquatic-life or human health benchmarks established by the U.S. Environmental Protection Agency were exceeded.
- Concentrations of arsenic, copper, and lead were not present at levels of concern with regards to aquatic toxicity.
- Trace element concentrations were higher downstream than at the upstream reaches of the Columbia River.
- Eight of the 54 wastewater compounds analyzed were detected at least once, usually at trace levels. Bisphenol A was the only endocrine disruptor in wastewater compounds detected in the Columbia River.
- During seasonal samplings of suspended sediment no organochlorine compounds or polycyclic aromatic hydrocarbons (PAHs) were detected
- All 11 polybrominated diphenyl ether (PBDE) congeners were detected on suspended sediments, usually in trace amounts.
- 102 of the 209 PCB congeners were detected on suspended sediments, usually in trace amounts.

A copy of the report is available from the USGS at http://pubs.usgs.gov/ds/2006/213/#download. Additionally, the USGS report "Water Quality of the Lower Columbia River Basin: Analysis of Current and Historical Water-Quality Data through 1994" can be downloaded at http://or.water.usgs.gov/pubs_dir/Abstracts/95-4294.html.

11.3 Outfall Analysis

The scope of this report is limited to the location of the connection where the on-site stormwater will be discharged to the port's existing system. The outfall locations are described above in section 9.111.1. The existing outfalls are permitted under stormwater permits WAR000424 and WAR045201.

The Port has completed extensive development in terminals 4 and 5 and the construction of the downstream stormwater systems was master-planned to include the Facility areas. These plans assumed that the areas of this Facility will be developed with 100 percent impervious coverages. As shown, the Facility will use landscaping to reduce impervious coverage and, therefore, downstream capacities are not affected by this project.

The water quality benchmarks established by Ecology are proposed to be met at all discharge locations where stormwater from the Facility is in contact with pollution-generating surfaces. These permitted benchmarks are established to protect water quality.

12. Relationship to Existing Treatment Facilities

The Facility is not proposing to use downstream treatment facilities to achieve water quality benchmarks. Downstream treatment facilities are only necessary to treat stormwater from the general use areas as discussed throughout this report.

The Facility will discharge wastewater to the City's sanitary sewer system and the wastewater will be treated at the City's treatment plant. The remaining portion of sanitary and process water will be hauled off site and legally disposed of. Disposal companies collecting portable toilet waste from the Marine Terminal will take the waste to a municipal treatment plant for treatment. Contaminated wastes will be taken to local processing facilities that perform pre-treatment prior to discharging the waste to the sanitary sewer.

12.1 Terminal 4 Treatment Facilities

The Terminal 4 collection system collects and treats approximately 250 acres of industrial port land. Modifications were completed in October 2012 to the Terminal 4 water quality pond to increase its treatment capacity and efficiency. A project is currently under construction to further modify the stormwater system to separate stormwater from the project site and Farwest Steel from the port's stormwater. The project will bypass the Terminal 4 pond.

Portions of the transfer pipelines (Area 500) will continue to discharge to the port's collection and treatment system. The pipelines are considered non-pollution generating. No additional runoff or increase in pollutant loading to the Terminal 4 pond is anticipated.

12.2 Terminal 5 Treatment Facilities

Stormwater from Terminal 5, including areas 200 and 600 and the rail improvements, will discharge to the existing conveyance and treatment system installed in Terminal 5. The downstream water quality lagoons were constructed to treat industrial and stormwater runoff from the Evergreen/ALCOA smelter once located at the site.

A new stormwater system was installed as part of the site remediation that occurred during the decommissioning of the Evergreen/ALCOA facility. The analysis completed during design and engineering for the stormwater modification as well as for the rail improvements that were part of the WVFA project concluded that the lagoons do provide some level of treatment; however, the report (attached in Appendix D) does not quantify the level of treatment. Therefore, the Facility will meet discharge limits prior to discharging to the Port's system.

The rail improvements will continue to discharge to the port's collection and treatment system. The rail improvements that are part of this project are intended only to transport rail cargo, and will include no maintenance or washing facilities. No additional runoff or increase in pollutant loading to the Terminal 5 pond is anticipated beyond the currently designed capacities already assumed in the WVFA project.

12.3 Marine Terminal Treatment Facilities

The existing stormwater treatment and infiltration facilities located at the Marine Terminal will be used to treat and infiltrate the Facility's stormwater. The existing facilities provide treatment and disposal for 25 acres of contributing stormwater. The marine vapor control units will be constructed in a portion of one of the treatment swales, affecting approximately 120 feet of biofiltration swale.

To mitigate for the loss of treatment capacity, the Facility will install over 1,000 linear feet of media filter drain to provide treatment for the pollution-generating surfaces constructed at the Marine Terminal. The proposed treatment trade allows an additional 1.5 acres of existing contributing area to be treated. The total amount of contributing area to the infiltration system is not proposed to be increased.

Stormwater from the containment area at the dock will be collected and piped to an oil-water separator and water quality filters for treatment. The containment area includes sufficient storage for the required containment volume of three bbl. Discharges from the oil-water separator and treatment unit will be pumped to the treatment swales for final treatment prior to flowing into the infiltration swales.

13. Municipal Wastewater System Analysis

Sources of wastewater will include the boiler plant effluent, miscellaneous part and equipment wash, fire pump cooling water, and domestic sewage. Detailed descriptions of these wastewaters are summarized above in sections 8 and 9. Most wastewater sources will be connected to the City's public sanitary sewer system. Sanitary sewerage collected from within the port area will be conveyed to the City's wastewater treatment plant where it will be treated and discharged to the Columbia River under NPDES Permit No. WA0024350. All process wastewater discharged from the Facility to the City's sanitary sewer system will undergo pretreatment to ensure compliance with the City's pretreatment program.

A detailed analysis of the downstream sanitary sewer system is not included in this report. The City of Vancouver has reviewed the requested discharges and provided a letter (attached in Appendix M) stating that the downstream facilities have sufficient conveyance and treatment capacities for this project. The discharge of the process wastewaters to the City's treatment plant would typically require a State Waste Discharge Permit to Discharge Industrial Wastewater to a Publicly Owned Treatment Works. A completed Application for a State Waste Discharge Permit to Discharge Industrial Wastewater to a Publicly Owned Treatment Works and the City of Vancouver Industrial Information Form, as well as required supporting data, is attached to this report in Appendices K and L. This information was originally submitted to EFSEC as part of the ASC in section 5.2.

13.1 Conveyance System Capacity

The conveyance system in this portion of the City includes 18-inch diameter gravity sewer mains. The Facility submitted pre-application paperwork and detailed wastewater analysis to EFSEC as part of the ASC, which specified a maximum flow of 30 gpm. The gravity sewer will flow to a regional pump station located adjacent to the southeast corner of the proposed Storage Area.

The City reviewed a pre-application narrative which listed the wastewater discharges from the Facility at 30 gpm and indicated that the City's wastewater conveyance system has sufficient capacity to serve the project.

13.2 Treatment Plant Capacity

Maximum wastewater discharges to the City's sanitary sewer system by the Facility will account for less than 0.1 percent of the total treatment capacity of the City's wastewater treatment plant. The plant uses an activated sludge process, UV disinfection, and sludge incineration for treatment, and is rated for a maximum wet weather treatment capacity of 28.26 MGD. Current treatment plant maximum flow is listed in the most recent Ecology facility fact sheet dated 2003 as 17.4 MGD.

As stated above, the pre-application narrative reviewed by the City listed the wastewater discharges from the Facility at 30 gpm and the City indicated that its plant has sufficient wastewater treatment capacity to serve the project.

14. Sludge Disposal

All materials collected in the proposed treatment BMPs and resulting from routine maintenance – including sweepings, catch basins, sumps, pretreatment solids settling units, oil-water separators, and filter vaults – will be hauled off and legally disposed of.

Replacement of the water quality vault filter media and residue from cleaning coalescing plate cartridges will be completed under a maintenance agreement with the vendor or similar professionally qualified maintenance service. Solids and separated oils will be removed and hauled off site for legal disposal. Water quality facilities will be refilled with clean water to operational levels and commissioned according to the manufacturer's recommendations. A detailed description of the maintenance requirements is provided in the operations SWPPP submitted under a separate cover.

15. Ownership Operation and Maintenance Responsibility

The Facility is located on parcels that are owned by the Port. Applicant has entered into a lease with the Port for the exclusive use of the property located within the site boundary. A portion of the lease includes a non-exclusive easement for the transfer pipeline corridor. Applicant will be responsible for the operation, maintenance, and permit compliance for the proposed stormwater collection, conveyance, and treatment systems.

Applicant is a Delaware limited liability company that is qualified to do business in the state of Washington. Its members are Savage Companies and Tesoro Refining & Marketing Company LLC. Tesoro Refining & Marketing Company LLC is a subsidiary of Tesoro Corporation, which is a Fortune 150 company and an independent refiner and marketer of petroleum products. Savage Companies is a privately held operator that provides supply chain management solutions tailored to meet the needs of a variety of industries.

16. Compliance with State, Local, and Federal Water Pollution Regulations and Plans

The project is proposing to ensure compliance with state, local and federal water pollution regulations and plans by using structural BMPs to separate stormwater from the industrial activity and treatment units. The BMPs discussed in the preceding sections include schedules of activities, prohibitions of practices, procedures for maintenance, and structural and managerial practices that, when used singly or in combination, will prevent or reduce the release of pollutants and other adverse impacts to surface water.

To ensure compliance, the Facility has factored into its design all known, available, and reasonable methods of prevention, control, and treatment to prevent and control pollution. The following standards were used in the design and preparation of operations/management of the Facility.

16.1 Federal Standards

Federal Clean Water Act regulations, which include those implemented through the NPDES permits for stormwater and wastewater, are locally administered through Ecology. On 23 March 2007, the Port was issued an NPDES Western Washington Phase II Municipal Stormwater Permit for discharges of stormwater to surface waters through its municipal separate storm system.

16.2 State Standards

16.2.1 Statutes

Washington's requirements for surface water management are contained in the following statutes:

- Washington State Surface Water Quality Standards (WAC 173-201A)
- Ground Water Quality Standards (WAC 173-200)
- Sediment Management Standards (WAC 173-204)

16.2.2 Stormwater Management Manual

Ecology's stormwater manual is not a regulation, but it has been adopted by the City, and state permits require compliance with the manual. Additionally, stormwater management techniques applied in accordance with the manual are presumed to meet the technology-based treatment requirements of RCW 90.52.040 and RCW 90.48.010 – that the project provide all known available and reasonable methods of treatment (AKART), prevention, and control as required by RCW 90.52.040 and RCW 90.48.010.

Land-disturbing activity carried out by the project will trigger water quality improvements required by the City's NPDES Phase II permit. Therefore, minimum requirements 1 through 9 of the stormwater manual apply. The minimum requirements are listed below.

16.2.2.1 Minimum Requirement No. 1: Preparation of Stormwater Site Plans

Stormwater site plans have been prepared and are attached in Appendix C of this report. Stormwater site plans are required by Section 2.5.1 of the stormwater manual and must be prepared according to Chapter 3 of the manual and VMC 14.24, 14.25, and 14.26.

16.2.2.2 Minimum Requirement No. 2: Construction Stormwater Pollution Prevention

The Facility will result in more than 2,000 square feet of replaced hard surface and will disturb more than 7,000 square feet of land; stormwater pollution prevention, therefore, must be considered. To comply with this minimum requirement, a preliminary construction SWPPP has been submitted under separate cover.

16.2.2.3 Minimum Requirement No. 3: Source Control of Pollution

Identified sources of pollution are addressed with designed source control BMPs in accordance with the stormwater manual. Possible sources are identified and, where possible, eliminated during design. Remaining sources are mitigated with operational BMPs, and these are addressed in the operations SWPPP prepared under separate cover.

16.2.2.4 Minimum Requirement No. 4: Preservation of Natural Drainage Systems and Outfalls

The site is an existing industrial site with no natural drainage channels. Discharges from the site will be maintained and directed to existing conveyance systems using existing outfalls. Discharge rates will not be increased due to the condition of the existing site as fully impervious. The site will discharge to three existing outfall systems: one located downstream of the Terminal 4 pond, one located at Terminal 5, and infiltration swales located immediately north of the Marine Terminal.

Stormwater control and treatment structures are not located within the 25-year water elevation of the Columbia River, the only salmonid-bearing water adjacent to the project location. Existing outfalls were sized and designed to account for the construction of the project area as fully impervious surfaces.

16.2.2.5 Minimum Requirement No. 5: On-Site Stormwater Management

Stormwater will be managed on site in accordance with Section 2.5.5 of "Volume I, Minimum Technical Requirements and Site Planning" of the stormwater manual. In addition, in accordance with Section 2.5.7 of Appendix I-E of the manual, the project is flow control-exempt and therefore is not required to achieve the low impact development performance standard, or to consider bioretention, rain gardens, permeable pavement, or full dispersion. Stormwater monitoring manholes will be installed upstream of all connection points to monitor water quality and confirm that on-site stormwater management techniques meet all required water quality benchmarks.

Site grading will be conducted and stormwater improvements installed to minimize the discharge of stormwater runoff from the site. Structural components of design, including manmade conveyances, inlets, and berms, will be used to contain stormwater on site. The project design accounts for the safe conveyance of the 100-year storm event in accordance with the stormwater manual.

16.2.2.6 Minimum Requirement No. 6: Runoff Treatment

Because the total project will add more than 5,000 square feet of pollution-generating hard surface, the project is required to address runoff treatment. Treatment units are sized for the contributing area and expected water quality flow as determined by the WWHM. Treatment facilities were selected in accordance with the process identified in Chapter 4 of Volume I and Chapter 2 of Volume V of the stormwater manual. An operations SWPPP (prepared under separate cover) adheres to the maintenance schedule required in Volume V.

Discharge water quality monitoring manholes will be provided at all connection points to the existing stormwater conveyances. Stormwater discharges from pollution-generating surfaces in the Storage Area and Marine Terminal will be discharged to existing stormwater systems located in Terminal 4. Stormwater will be treated on site to the discharge limits identified in the state Industrial Stormwater General Permit. Terminal 4 discharges are currently permitted through state General Industrial Stormwater Permit No. WAR000424.

Stormwater discharges from pollution-generating surfaces in the area of the future West Boiler, the unloading and office area, and rail improvements will be discharged to existing systems located in Terminal 5. Stormwater will be treated on site to the discharge limits identified in the state Phase II Municipal Stormwater Permit. Terminal 5 stormwater will then be routed to an existing water quality pond that was designed with sufficient capacity for the built-out project areas, assuming fully impervious coverage. Terminal 5 discharges are currently permitted through state Phase II Municipal Stormwater Permit No. WAR045201.

16.2.2.7 Minimum Requirement No. 7: Flow Control

Flow control is not required for this project, which discharges indirectly to the Columbia River, which is listed in Appendix I-E of the stormwater manual. The areas proposed for redevelopment are located within the existing drainage basins of developed storm drain systems that discharge through manmade conveyances directly to the river.

Additionally, the brownfield nature of the site is such that the project stormwater does not result in the diversion of drainage from any perennial stream or from any category of wetland.

On-site stormwater will be collected from building roofs through gutter and rain drain systems that bypass stormwater treatment, as these surfaces are classified as non-pollution generating. Stormwater from surface improvements will be collected through a series of inlets and storm drain systems, routed through on-site treatment, and discharged to existing on-site manmade pipelines. These pipelines continue

through manmade conveyance pipes to manmade water quality facilities before discharging through piped outfalls to the Columbia River. From collection to discharge into the river, the stormwater will never be conveyed through natural channels.

The design of the downstream conveyance and water quality ponds that are not part of this project assumed that the project sites will be developed as fully impervious. Copies of the design reports for the downstream conveyance systems are attached in Appendix D.

16.2.2.8 Minimum Requirement No. 8: Wetlands Protection

Wetland protection does not apply to this project. This project will not discharge stormwater directly or indirectly into a wetland.

16.2.2.9 Minimum Requirement No. 9: Operation and Maintenance

An operations SWPPP consistent with the provisions of Volume V of the stormwater manual is being submitted under separate cover. A copy will be retained on site and be available for review. Updated logs and copies of all required monitoring will be retained and included in the SWPPP for reference.

16.3 City Standards

Water Quality Standards – The City's requirements for surface water management are contained within the following ordinances:

- Erosion prevention and sediment control (VMC 14.24)
- Stormwater control (VMC 14.25)
- Water resources protection (VMC 14.26)

Wastewater Pretreatment Ordinance – Pretreatment will be conducted on site in accordance with the requirements of the City industrial wastewater pretreatment permit. Process water wastewater streams requiring pretreatment include blowdown and condensate discharges from the boiler plants. Pretreatment processes for these wastewater streams will be designed and furnished by the boiler manufacturer in accordance with industry practices.

Table 39 includes data provided by the boiler treatment supplier and illustrates example discharge constituents of similar boiler installations within the City. The constituent concentrations shown for the boiler blowdown and softener backwash discharges are the estimated wastewater concentrations prior to pre-treatment. The boiler manufacturer is required to provide on-site pretreatment prior to discharging into the sanitary sewer system. The daily maximum concentration limit is the discharge and constituent concentration limits listed in the City's pretreatment ordinance. Effluent monitoring will be completed to ensure compliance with the City's pretreatment ordinance. The daily maximum concentration limits below have been obtained directly from VMC 14.010.080.

Table 39. Process Wastewater Constituent Concentrations

Constituent	Boiler Blowdown	Softener Backwash	Daily Maximum Concentration Limit	Unit
pH (minimum)	10.2	8	5.5-10.0	-
Arsenic	-	-	0.22	mg/L
Biological Oxygen Demand	-	-	500	ppd
Cadmium	<0.04	<0.04	0.14	mg/L
Chromium	<0.01	<0.01	7.22	mg/L
Chromium (hexavalent)	-	-	4.28	mg/L
Copper	4	0.2	3.67	mg/L

Constituent	Boiler Blowdown	Softener Backwash	Daily Maximum Concentration Limit	Unit
Cyanide	-	-	0.47	mg/L
Hydrocarbon-based Oil & Grease	-	-	50.0	mg/L
Lead	<0.2	<0.2	0.44	mg/L
Mercury	-	-	0.008	mg/L
Molybdenum	<0.1	<0.1	0.42	mg/L
Nickel	<1	<1	0.90	mg/L
Selenium	-	-	0.31	mg/L
Silver	-	-	1.13	mg/L
Temperature	-	-	104	Degrees Fahrenheit
Thallium	-	-	0.53	mg/L
Zinc	-	-	1.64	mg/L

Additionally, discharges will comply with VMC 14.010.050 Prohibited Discharge Standards, VMC 14.010.060 National Categorical Pretreatment Standards, and VMC 14.010.070 State Pretreatment Standards.

17. Provisions for Future Construction

The Facility is proposed to be constructed in two phases. Most of the work will be completed during initial construction; however, the design includes provisions to facilitate construction of the second phase. The provisions are summarized below.

Stormwater design and analysis for the entire built-out site, including the future phase, were completed for the entire site as part of this engineering report. The expansion areas contribute directly to stormwater systems that will be installed in the initial phase of construction and the design therefore includes adequate capacity sized to handle stormwater from the expansions described below; the design also includes a conservative margin.

17.1 Unloading Stations

Initial construction will include the below-ground improvements located within the limits of the rail unloading facility. The improvements, including the concrete containment trench and pump pits, will be completed to allow a third row of unloading stations, bringing the total number of unloading stations to 90. Mechanical and electrical systems will not be installed at this time. Sufficient overhead lighting as well as fire protection systems will be installed in this vicinity to comply with safety standards adopted by the project and required by permit.

Underground “wastewater” collection systems, including floor drains, will be installed and routed to the collection system for the entire rail unloading facility. Stormwater that is “blown” into the covered facility from the sides and any leaks, drips, wash water, etc. will be pumped to the containment tanks located in the area of the administration/support buildings for haul off and disposal. No runoff from this area will contribute to existing or planned stormwater systems.

17.2 West Boiler

Constructing the West Boiler will be necessary if the Facility is supplied with crude oils that must be brought to a more viscous state through additional heating in order to be pumped and handled. Construction of the West Boiler will not commence until warranted by market conditions.

The West Boiler will include the enclosed west boiler building, parking area, and landscaping. All wastewaters generated within the boiler plant will contribute to floor drains and will be pumped to the area of the administration/support buildings for discharge to the City's sanitary sewer system. Process wastewater, including condensate, blowdown, and cooling water, will be treated on site and discharged to the sanitary sewer.

Stormwater from the West Boiler will contribute to the 24-inch gravity storm sewer extended underneath the rail corridor to serve the area of the administration/support buildings. The stormwater will be conveyed to a water quality vault (0200-WQV-001) for treatment to Basic treatment levels. The design of the water quality vault is sized to include the contributing area for the West Boiler. See the design section for details.

17.3 Product Storage Tanks

Initial construction of the Facility will include four of the six planned product storage tanks. Initial construction will include completion of the necessary ground improvements and construction of the containment dikes, liners, and required stormwater collection systems.

Stormwater from the future product storage tanks will contribute to the water quality systems installed during initial construction. The treatment systems, including oil-water separator, water quality vault, and proposed hydrodynamic separator, have been sized for the ultimate build-out. See the design section for details.

18. Treatment Unit Alternatives Analysis

The proposed Facility is designed with an abundance of source controls to limit the contamination of stormwater. Segregating the stormwater from the on-site industrial processes dramatically reduces the anticipated influent levels of contamination in the stormwater. The following sections first describe the selected treatment unit and then list the alternatives that were considered and rejected.

18.1 Basic Treatment Units

Stormfilter Using ZPG Media – Selected as the preferred alternative for providing Basic treatment for areas 200, 300, and 600, this unit has received its General Use Level Designation from Ecology and has a track record of reducing the TSS when designed and maintained appropriately.

Media Filter Drain – Realigning the roadway south left enough space for the installation of the media filter drain that was selected as the preferred alternative for providing Basic treatment at Area 400. The unit has received General Use Level Designation for advanced treatment.

The units that were considered but rejected for Basic treatment are listed in Table 40.

Table 40. Rejected Alternatives – Basic Treatment

Basic Treatment Unit	Reason for Rejection
MWS-Linear Modular Wetland	Approved for conditional use only – insufficient area on site
Biofiltration Swale	Insufficient area on site
Wetpond	Insufficient area on site
Wetvault	Filter vault media options provides greater expandability if additional treatment required in long term.

18.2 Enhanced Treatment Units

StormFilter Using MetalRx Media was selected as the preferred alternative for providing Enhanced treatment for Area 300. The unit has received its Conditional Use Level Designation from Ecology and, when used in treatment train with GAC, provides necessary filter capabilities. The units that were considered but rejected for Enhanced treatment are listed in Table 41.

Table 41. Rejected Alternatives – Enhanced Treatment

Enhanced Treatment Unit	Reason for Rejection
Filterra System	Modular sizing for Filterra does not treat runoff volume anticipated
Compost-Amended Biofiltration Swale	Insufficient area on site
Treatment Trains from Table 3.4.1 of SWMM	Insufficient area on site

18.3 Oil-Water Separators

Coalescing Plate Separator Bay – The selected units include two Contech VLC80-3 capable of handling a design flow rate of 880 gpm with over 35,000 square feet of coalescing plate area, OldCastle Pre-cast 612-2 CPS with 1,776 square feet of coalescing plate area, and 576 CPS with 592 square feet of coalescing plate area. The coalescing plate technology provides oil separation with a smaller footprint.

The units that were considered but rejected for oil treatment are listed in Table 42.

Table 42. Rejected Alternatives – Oil Treatment

Enhanced Treatment Unit	Reason for Rejection
API-Type Oil-Water Separator	Larger footprint
Linear Sand Filter	Insufficient area on site
Filterra System	Modular sizing for Filterra does not treat runoff volume anticipated

18.4 Volatile Organics/BTEX Treatment

StormFilter Using GAC Media was selected as the preferred alternative for the removal of volatile organics and BTEX/benzene. The rationale for using a passive GAC treatment as opposed to positive pressure/pumped active process (e.g., sand filtration and GAC filters) is that the amount of volatile organics and benzene from the site is anticipated to be minimal because of the abundance of source control and upstream oil-water separation included in the project. The passive system is shown to remove approximately 40 percent of the benzene when concentrations are at or below 1 ug/L.

The units that were considered but rejected for the removal of volatile organics and BTEX/benzene are listed in Table 43.

Table 43. Rejected Alternatives – Volatile Organic Treatment

Volatile Organic Treatment Unit	Reason for Rejection
Positive Pressure Sand Filtration with GAC Unit	Treatment requires power and increased maintenance. Source controls effectively limit contact water with product eliminating need for advanced treatment technology

19. Design and Construction Timetable

A preliminary schedule for design and construction is presented in Table 44. The west boiler building, unloading stations, and storage tanks will be built when warranted by market conditions.

Table 44. Permitting and Construction Milestones

Event	Milestone Date
Construction Start Date	January 4, 2016
Completion of Underground Utility Installation	May 1, 2016
Initial Site Stabilization	May 1, 2016
Commissioning of proposed stormwater system	May 1, 2016
Facility Operations Startup	June 1, 2016
Completion of Grading	July 1, 2016
Landscape Installation	July 1, 2016
Facility Tanks 1-4 Operational	February 1, 2017
Final Grading (Tanks 5-6)	February 1, 2017

20. SEPA/NEPA Compliance

The proposed Facility is subject to a site certification application being considered by EFSEC, and that body is acting as the lead agency under SEPA. EFSEC has issued a determination of significance, and an environmental impact statement, which is now in preparation, will be completed before the site certification agreement is issued.

The only aspect of this project subject to NEPA is the decision by the USACE under Section 10 of the Rivers and Harbors Act for work at the existing berths 13 and 14. The USACE will be responsible for NEPA compliance related to the decision under Section 10.

21. List of Acronyms and Abbreviations

Applicant: Tesoro Savage Petroleum Terminal LLC

ASC: Application for Site Certification

bbl: barrel and barrels

BMP: best management practice

BTEX: benzene, toluene, ethylbenzene, and xylenes

CFR: Code of Federal Regulations

cfs: cubic feet per second

City: City of Vancouver

CMMP: contaminated media management plan

Ecology: Washington State Department of Ecology

EFSEC: Energy Facility Site Evaluation Council

Facility: Vancouver Energy

FEMA: Federal Emergency Management Agency

GAC: granulated activated carbon

gpd: gallons per day

gpm: gallons per minute

HDPE: high-density polyethylene

IBC: International Building Code

MGD: million gallons per day

MSDSs: material safety data sheets

MTCA: Model Toxics Control Act

NEPA: National Environmental Policy Act

NPDES: National Pollutant Discharge Elimination System

PAHs: polynuclear aromatic hydrocarbons

PCBs: polychlorinated biphenyls

Port: Port of Vancouver USA

POTW: Publicly Owned Treatment Works

RCW: Revised Code of Washington

RM 103: River Mile 103

SEPA: State Environmental Policy Act

SMP: Shoreline Management Program

TCE: trichloroethylene

TSS: total suspended solids

USACE: U.S. Army Corps of Engineers

USGS: U.S. Geological Survey

VMC: Vancouver Municipal Code

VOC: volatile organic compound

WAC: Washington Administrative Code

WDFW: Washington State Department of Fish and Wildlife

WVFA: West Vancouver Freight Access

WWHM: Western Washington Hydrology Model