BergerABAM

210 East 13th Street, Suite 300, Vancouver, Washington 98660-3231
360/823-6100 • 360/823-6101 Fax • www.abam.com

27 May 2016

Mr. Stephen Posner, Manager
Energy Facility Site Evaluation Council
Washington Utilities and Transportation Commission
P.O. Box 43172
Olympia, WA 98504-3172

Subject: Vancouver Energy
EFSEC Application No. 2013-01, Docket No. EF131590
Response to 19 February 2016 Letter Regarding Industrial National Pollutant Discharge Elimination System Permit Application Review

Dear Mr. Posner:

This letter responds in part to your letter of 19 February 2016 regarding Washington State Department of Ecology (Ecology) comments on the application by Tesoro Savage Petroleum Terminal LLC (Applicant) for an Industrial National Pollutant Discharge Elimination System (NPDES) permit for Vancouver Energy. Below we have reproduced the comments, taken from your 19 February 2016 letter, in *italics* and we show our responses in regular text.

In addition, Ecology requested updates to the NPDES Engineering Report; the updates are being completed and will be submitted under separate cover for Energy Facility Site Evaluation Council (EFSEC) review.

1. City of Vancouver Pretreatment Permit

A pretreatment permit issued by the City of Vancouver (City) is required to discharge industrial wastewater, in this case, wastewater from the West boiler area and pump basin, to the City wastewater treatment plant. Appendix M of the revised engineering report dated October 15, 2015 contains two correspondences between the City and the applicant. However, there is no pretreatment permit/approval by the City included in Appendix M. Without information on wastewater characterization and expected treatment level of the oil/water separator, EFSEC is unable to verify the effluent can meet the city pretreatment standards. The engineering report may be conditionally approved pending the approval of the City to accept discharge from the facility.

The Applicant respectfully disagrees with EFSEC's position that the pretreatment permit must be issued by the City of Vancouver (City). As you know, the City and the Applicant filed motions to Administrative Law Judge Noble requesting a ruling supporting its position that EFSEC must issue the permit. The City submitted a motion to Administrative Law Judge Noble in support of EFSEC's position[1]. The Applicant has submitted a response to the City's Motion on 28 April 2016 and expects a ruling that EFSEC, not the City, is responsible for issuing the pretreatment permit[2].

The Applicant's motion does not question the need to comply with all applicable pretreatment standards. To that end, the Applicant completed a detailed wastewater characterization for the proposed industrial wastewater discharge streams. Detailed modeling of the boiler plant was completed by DMS-Nalco and is based upon DMS-Nalco's expertise modeling, maintaining, and servicing local boiler facilities. The full wastewater characterization report is attached for reference. A summary of the results compared to the City's discharge limits are summarized in Table 1. The industrial wastewater discharges from the Facility will meet the requirements of the City's Pre-Treatment Ordinance in VMC 14.10.

The City commented in Section 14.04 of their land use and zoning consistency motion submitted to EFSEC that "the applicant has provided sufficient information to grant preliminary approval related to this standard. Final civil engineering review and approval is required." Concurrently with this letter, the Applicant is submitting the required civil plans to the City for review as part of the pretreatment and wastewater discharge approval.

In addition, the Applicant proposes the following revisions to industrial wastewater capture and handling at the Facility to further minimize discharge of pollutants into the City's sewer system.

- Pump Basin Stormwater Discharges: The pump basin located at Area 300 will be covered by a steel-framed shed roof to isolate stormwater from the pump basin. A sump and downstream containment tank will be provided to collect any washdown or drips or leaks resulting from maintenance activities. Liquid wastes collected in the tank will be hauled off by a licensed hauler for the type of liquids within the tank. The likely receiving facility for these wastes will be Safety Kleen (Clackamas, Oregon) or similar.

---

[1] In the Matter of Application No. 2013-01, Tesoro Savage LLC, Vancouver Energy Distribution Terminal, Case No. 15-001, City of Vancouver's Motion for Order Ruling that EFSEC Lacks Authority to Issue Pre-Treatment Discharge Permit, March 29, 2016.

[2] In the Matter of Application No. 2013-01, Tesoro Savage LLC, Vancouver Energy Distribution Terminal, Case No. 15-001, Vancouver Energy's Response in Opposition to the City of Vancouver's Motion for Order Ruling that EFSEC Lacks Authority to Issue Pre-Treatment Discharge Permit, 28 April 2016.

- Fire Pump Cooling Water Discharges: The fire pump cooling water discharges result from the weekly maintenance cycling (30 minutes per week for each pump) of fire pumps located in Areas 200, 300, and 400. The Applicant has conducted a wastewater characterization of the fire pump cooling water discharges (see Table 1 attached). The fire pump cooling water will be sourced directly from the City's water supply without contact with any other chemicals or constituents; therefore, the discharge will be the same as the inlet water chemistry.

  - Area 200 fire pump cooling water will be collected in the already proposed containment tank system installed in Area 200. The contents of the containment tank system will be hauled off site to a facility, such as PPV Inc., described in Item 7 below.

  - Area 300 fire pump cooling water will be collected in a 1,000-gallon permanent surge tank where it will be tested for chlorine residual and temperature prior to being released to the City sewer system. The cooling water will only be released once the chlorine residual and temperature meet City's pre-treatment ordinance discharge limits in VMC 14.10.

  - Area 400 fire pump cooling water will be collected in a 1,000-gallon permanent storage tank. The tank contents will be hauled off site once per week.

The Applicant believes that disposal to sanitary sewer is the preferred option and that a pretreatment permit can and should be issued by EFSEC. The Applicant is concerned that a City permit would be subject to a separate review and appeal process, rather than the integrated process envisioned by Ch. 80.50 RCW.

For that reason, the Applicant has investigated and confirmed two alternative means by which industrial wastewater can be disposed of without directing discharges to the City's publicly owned treatment works (POTW). These are summarized as follows.

Alternative 1: Boiler Wastewater Discharge to NPDES Outfall
This alternative would reroute the discharges from the Boiler Building (Area 600) to the proposed on-site stormwater collection system. The discharges from the boiler plant as analyzed by DMS-Nalco are suitable for discharge to the Columbia River through the existing stormwater system. Additional treatment for temperature may be required following detailed engineering design of the systems to meet the anti-degradation water quality standard within the Columbia River.

If this alternative is selected as the preferred alternative, a Tier II anti-degradation water quality standards review will be completed for the Facility to demonstrate that Facility

discharges from the Boiler Building will not result in a detectable change in water quality.

Under this alternative the fire pump cooling water discharge from Area 300 will be converted from a discharge to the City's sanitary sewer system to a collection tank and hauled off. The tank will be pumped once per week and contents hauled to PPV Inc. or similar authorized facility.

Alternative 2: Boiler Wastewater Haul Off
This alternative would capture and temporarily store on site the discharges from the Boiler Building (Area 600). The stored boiler plant discharges would be stored in an on-site steel storage tank and hauled off. It is anticipated that the haul-off option would result in an average of additional 2.5 truck trips per day during operation of the Facility. The haul and disposal would be completed by Bravo Environmental and PPV Inc. or similar. The wastewater constituents of the discharge was provided to PPV Inc. and reviewed by their in-house staff which prepared a summary of the proposed treatment process to be used for the Terminal's wastewater.

Under this alternative the fire pump cooling water discharge from Area 300 will be converted from a discharge to the City's sanitary sewer system to a collection tank and hauled off. The tank will be pumped once per week and contents hauled to PPV Inc. or similar.

The Applicant is requesting that EFSEC review and provide comments on each of these two alternatives to a POTW discharge. We are also requesting a meeting with EFSEC staff and the appropriate Ecology reviewers to discuss each of these alternatives that could be pursued in the event that the Applicant's motion is denied.

The following table summarizes the key constituents identified in the City's local pre-treatment ordinance in VMC 14.10.080, Table 14.10.080-1. As shown in the table below, the wastewater discharge from Area 600 meets all of the performance specifications of the City's pre-treatment ordinance.

Table 1. Wastewater Discharges Compared with City's Pre-treatment Limits

Key Water Constituents	Pre-Treatment Limit Specifications	Area 600 Boiler Building	Fire Pump Cooling
	Final Wastewater Discharge	Final Wastewater Discharge	Final Wastewater Discharge
Ag (mg/L)	1.13	ND	ND
As(mg/L)	0.22	ND	ND
Cd(mg/L)	0.14	ND	ND

Key Water Constituents	Pre-Treatment Limit Specifications	Area 600 Boiler Building	Fire Pump Cooling
	Final Wastewater Discharge	Final Wastewater Discharge	Final Wastewater Discharge
Cr(mg/L)	7.22	ND	ND
Cu(mg/L)	3.67	ND	ND
Hg(mg/L)	0.008	ND	ND
Mo(mg/L)	0.42	ND	ND
Ni(mg/L)	0.90	ND	ND
Pb(mg/L)	0.44	ND	ND
Se(mg/L)	0.31	ND	ND
Tl(mg/L)	0.53	ND	ND
Zn(mg/L)	1.64	0.062	0.02
CN(mg/L)	0.47	NT	ND
BOD5 (mg/L)	500	6.43	NT
FOG(mg/L)	50	7.7	NT
pH (SU)	5.5-10	8.4	7.7
Temp (degrees F)	104	75.8	70.0

Notes: ND – Not Detected, NT – Not Tested

The Applicant completed a detailed wastewater characterization for the proposed industrial wastewater discharge streams. Detailed modeling of the boiler plant was completed by DMS-Nalco and is based upon DMS-Nalco's expertise in modeling, maintaining, and servicing local boiler facilities. The full wastewater characterization report is attached for reference. Detailed wastewater characterization for the two industrial wastewater sources (boiler plant wastewater and fire pump cooling water) is summarized above in Table 1 and compared with the City's pretreatment discharge limits.

2. Area 200 Unloading and Office (Subsection 1.4.2.1)

> *This section states "Boiler blowdown (process wastewater) from Area 600 will be pumped to this area for on-site oil-water separation and discharge to the sewer." However in section 1.4.2.5, it states "boiler blowdown will be temperature treated using a heat exchanger and chemical neutralization if needed… A downstream oil-water separator is also included in the design prior to discharge. Process wastewater from this area is discharged to the gravity sewer described in Area 200 above." Section 8.3.2 states "Blowdown temperature at the boiler plant would be lowered to permit allowable levels with a cooling system that uses potable water as the coolant. Coolant water would be mixed along with boiler blowdown." Please clarify which*

> *type of treatment will be employed to treat boiler blowdown prior to discharging to the city sanitary sewer system.*

The Applicant will correct the statement in Sections 1.4.2.1, 1.4.2.5, and 8.3.2 for consistency. The following describes how the Applicant will treat and discharge boiler blowdown.

Boiler plant discharges from Area 600 will not require treatment to meet discharge requirements for the City's pretreatment ordinance with the exception of possible chemical neutralization for pH, and temperature. If pH adjustment is necessary, treatment will be provided by an automatic treatment system supplied by the boiler manufacturer. The Applicant has revised its design regarding cooling of the boiler blowdown. Rather than diluting with water to achieve the required temperature as previously described in subsection 1.4.2.1 in the October 2015 Engineering Report, and in order to further minimize water consumption and volumes of wastewater discharge, a non-contact tube and shell heat exchanger will be used to cool the discharge temperature to a maximum of 104 degrees Fahrenheit. Potable raw water will not be mixed with the boiler blowdown as coolant.

The treated and cooled boiler plant discharges will be pumped to the on-site gravity sewer installed within Area 200; it will not be comingled with water discharged to sanitary sewer from Area 600.[3] Discharges from Area 200 will be routed through an on-site oil-water separator prior to discharge to the City's sanitary sewer.

To clarify, the oil-water separator that is proposed in Area 200 on the sewer discharge from the Area 600 Boiler Building is included as part of the Facility's operations spill prevention control and countermeasure plan (SPCCP) and is unrelated to treatment of boiler plant discharges.

3. Administration and Support Buildings (Subsection 5.2.2.1)

> *The report states there are two double wall containment tanks located to the southeast of the easternmost administration/support building. The report also states those tanks will be operated such that 825 bbl of capacity is reserved to contain an entire railcar (plus 10 percent). However, there is no discussion on the impact to the tank capacity caused by the additional rail car wash water since the rail car washing water flow was not addressed in the previous report. Without the information, Ecology is unable to verify the tanks have sufficient capacity to store wastewater from the unloading building and contain spills in the building as required.*

The volumes of wash water and wastewater generated by washing the exteriors of rail cars were accounted for in the 2013 Application for Site Certification and subsequent engineering

[3] See response to Item 1 above regarding the haul-off alternative that has also been identified.

and permitting documents as part of the "miscellaneous part/equipment wash." The containment tanks will have a cumulative capacity of 1,500 bbl or 63,000 gallons.

The secondary containment collection system including piping from the rail containment pans, and surge tanks include a total capacity of 2,900 gallons (approximately 69 bbls). The trenches between the rail unloading stations located with the Area 200 rail unloading area have capacity to contain 33,400 bbls. The total hydraulic containment and collection system within Area 200 totals 34,969 bbls.

The three sources of wastewater contributing to the containment tanks at Area 200 are the miscellaneous part/equipment wash water (includes occasional rail car exterior washing), Area 200 fire pump cooling water and the condensate discharge for haul off. The total volumes of wastewater from these two sources are expected to range between 7,548 gpd (179 bbl/day) and a maximum of 10,852 gpd (258 bbl/day).

4. Rail Car Washing (Subsection 6.1.6.1)

The revised report (page 44) states frequency of railcar exterior washing is one railcar per month based on experience of the applicant at facilities receiving one unit train per day. Assuming each unit train contains 120 railcars, the terminal will receive oil from 3,600 railcars per month and only one of 3600 railcars requires pressure washing. Please provide the source of the operational data and how much water is required to pressure wash each railcar. The report states process wastewater including railcar wash water and other wastewater sources in the unloading facility is discharged to two containment tanks located at the admin/support area of Area 200. Content of those tanks will be hauled off site and disposed of by a licensed hauling and disposal company at an appropriate location. Please identify the receiving facility, treatment process employed and ultimate disposal point(s) of all wastewater generated at the facility that is disposed of offsite.

The frequency of washing is based upon the Applicant's experience operating similar loading and unloading facilities[4]. The Facility is being permitted to receive an average of four unit trains per day, which would, therefore, equate to approximately four railcars per month that would require exterior washing. The average railcar washing activities include wiping any visible oil on the outside of the railcar with a cleaner (Simple Green or similar) and a rag. When washing is necessary, a 5-gallon-per-minute pressure washer is used to help remove any residual oils. This washdown is usually less than 15 minutes per railcar. Therefore, volumes contributed from railcar washing are expected to be less than 300 gallons per month.

[4] Personal communication with Jared Larrabee and David Corpron.

The majority of the miscellaneous equipment/parts wash water is used for cleaning fittings and facility washdown. To estimate the total liquid haul off, volumes from a similar facility were reviewed. Based upon the design of the similar facility that sheds rainwater such that it is included with the haul-off volumes; the maximum estimated haul off volume from the unloading building for miscellaneous parts wash, facility washdown, and railcar exterior washing for the Facility will be approximately 1,000 gallons per day (gpd) and a maximum of 2,000 gpd.

As discussed above, the Applicant has not signed a contract for hauling off, disposing of, or recycling the contents of the containment tanks, but as indicated in this letter has identified companies which will be able to accept these discharges.

5. Northern pipeline, Terminal 4 stormwater system (Subsection 1.4.1.1)

> *The report states that the northern pipeline currently discharging stormwater to the Terminal 4 water quality pond will be re-routed to bypass the water quality pond and reconnect to the Port existing stormwater outfall to the Columbia River. The project is ongoing and will occur prior to the construction of the facility. Will the pipeline re-routing project proceed as planned since Farwest Steel is closed at this point?*

The bypass project described in the Engineering Report to reroute stormwater from Farwest Steel and Area 300 of the Facility has been constructed by the Port of Vancouver USA and is operational. As a result, the stormwater from Farwest Steel and Area 300 commingles with other stormwater after the Terminal 4 pond outlet. All of the commingled stormwater is then conveyed to the Terminal 4 outfall.

6. Anti-degradation Policy

> *Tier II is used to ensure that receiving waters of a higher quality than the criteria assigned in the standards are not degraded unless such lowering of water quality is necessary and in the overriding public interest. Tier II applies only to new or expanded sources of pollution from specific types of activities directly regulated by Ecology (e.g., NPDES, 401, 404, Forest Practices). Any new or expanding dischargers that would cause a measurable degradation of water quality:*
>
> *a. Must go through a technology review to identify and apply any feasible alternatives to that degradation.*
> *b. Must show that overriding public benefits would occur from allowing the lowering of water quality.*

> *A tier II analysis should be included in the NPDES Engineering Report. For reference please see WAC 173-201A-320 and Ecology guidance: (http://fortres.wa.gov/ecy/publications/SummaryPages/1110073.html) for more information.*

The Applicant is currently completing an analysis to demonstrate that discharges from the proposed Facility will not result in a measurable change in water quality outside the source area after allowing for mixing consistent with WAC 173-201A-400(7). The analysis will be completed in accordance with WAC 173-201A-320. The Applicant will complete the study and will submit the results to EFSEC at that time.

7. Area 200 Miscellaneous Part/Equipment Wash (Subsection 8.3.1)

> *This section describes wastewater sources in Area 200 including rail car and part/equipment washing, rainwater either dripping from the rail cars or blown in from the side, and accidental release of oil or fire retardant during oil transfers or system maintenance. Wash water will be collected and conveyed to the containment tanks for hauling off site by trucks to an approved facility for recycling or disposal. Wastewater collected at collection/containment trenches will be pumped to the unloading facility containment tanks and hauled off site by truck to a licensed and approved disposal facility. Please provide wastewater characterization, the treatment process employed and the ultimate point(s) for all wastewater generated at Area 200.*

The Applicant assumes that the reviewer means "ultimate point(s) of discharge for all waste waters generated in Area 200." Wastewater sources within the rail unloading building will be comingled, collected, and hauled off as discussed above. Collection of each stream is from the rail drip pans and floor drains within the rail unloading facility. Detailed characterization is only available for the steam condensate blowdown and is provided in the attached DMS-Nalco report. The remaining contributing streams are summarized with the components and expectations of those waste streams.

- Steam Condensate Blowdown. A full characterization of the steam condensate was developed by DMS-Nalco and is included in their attached report.
- Drips/leaks from railcars: Oily water with brake dust
- Windblown rain: Rainwater
- Railcar exterior washdown: Oily water, brake dust, suspended solids (dust), cleaner (Simple Green or similar)

- Parts wash: Oily water, cleaner (Simple Green or similar)
- Facility washdown: suspended solids (dust)

All of these sources of wastewater collected at the unloading facility will be pumped to the Area 200 containment tanks located at the Admin/Support Buildings and hauled off. It is anticipated that this haul off could occur daily depending upon actual wastewater production volumes.

There will be no on-site treatment for wastewaters collected at the unloading facility. Wastewaters during normal operations will be hauled by Bravo Environmental (or similar properly licensed industrial wastewater hauler) to PPV Inc. (or similar) for treatment, recycling, and discharge. PPV Inc. was preliminarily selected due to their treatment capabilities. Wastewaters from the Facility will be deposited upon arrival into a settling basin in the facility where the contents will be tested in their in-house lab to determine appropriate treatment. Following testing, the contents of the wastewater will most likely pass through advanced oil-water separator, settling basins, and possibly filtration prior to discharge. PPV Inc. developed a treatability plan (attached for your reference) confirming their ability to treat the range of wastewaters being hauled off from the Facility.

8. Area 600 Boiler Effluent (Subsection 8.3.2)

> *The boiler effluent discharges listed includes condensate discharge of 12,425 gpd to haul off. Please include characterization of the condensate and identify the receiving facility, treatment process employed and the ultimate disposal point of the wastewater. West Boiler (Subsection 17.2) states process wastewater including condensate blowdown and cooling water will be treated on site and discharged to sanitary sewer. Please specify how the condensate will be disposed of (offsite disposal or to the sanitary sewer).* ***Please ensure that the treatment process employed for each wastewater stream is consistent throughout the engineering report.***

During peak operating normal conditions (maximum water use and maximum sewer discharge), the boiler units operate with a 4 percent boiler blowdown rate and a 25 percent condensate loss. Under the maximum operating scenario with two boilers operating, the steam production is estimated to be 83,830 pounds per hour (pph) with a condensate return of 67,064 pph. The following chart indicates the resulting water balance for the boiler at these rates.

• Raw water (intake)	85,305 gpd
• Sanitary sewer discharge (boiler blowdown)	22,464 gpd
• Atmospheric loss	38,848 gpd
• Steam condensate blowdown (haul off)	7,952 gpd

The boiler blowdown, which includes condensate return, is treated for pH as needed and by a non-contact tube and shell heat exchanger to reduce temperature; then the blowdown is combined with the Reverse Osmosis (RO) wastewater and miscellaneous maintenance drain water within the boiler plant and pumped to the gravity sewer installed on site at Area 200, passes through an oil-water separator, and is discharged to the sanitary sewer.

Steam condensate blowdown is generated during the unloading of tank cars in Area 200. Within the rail unloading building as part of operating this system, during the connection and disconnection of the railcar steam coils, the operator opens the steam line valves and discharges steam directly to the rail drip pans. This procedure is an operational necessity, as it purges the lines of debris. This results in the discharge of steam condensate blowdown. The steam condensate blowdown is collected in the Area 200 drip pans, which discharge to the Area 200 containment tanks along with other wastewater streams as described in item 7 above. The contents of these containment tanks will be hauled offsite.

In accordance with the SPCC regulations in 40 CFR 112.8, the rail unloading facility includes a containment system designed to capture and store a minimum of 110 percent of the contents of a rail car. This system has been oversized so that all operational wastewaters generated within the rail unloading building can be collected and stored for haul off if necessary. These wastewaters include steam condensate blowdown and wastewaters resulting from the miscellaneous equipment wash (includes occasional railcar exterior washing).

The Applicant has not signed a contract for services that include hauling off and disposing of or recycling the contents of the Area 200 containment tanks. Vendors will be selected who are licensed appropriately by the Department of Transportation to haul non-hazardous waste liquids and whose receiving facilities are specially designed, permitted, and operated to provide pretreatment for non-hazardous industrial wastes. Examples would include Bravo Environmental and PPV, Inc.

A detailed characterization of the wastewaters were provided to PPV, Inc. and a description of the proposed treatment system was prepared by their in-house staff. Based upon the characterization and range of wastes expected, PPV confirmed that they can receive the wastes expected from the Facility.

9. Fire Pump Cooling Water (Subsection 8.3.4)

> *States that fire pump cooling water from different Areas 200, 300, and 400 is being discharged to the containment tank, sanitary sewer and stormwater system. However there is no information regarding the characteristics of fire pump cooling water. Please provide the information for review.*

Table 1 above provides a characterization for the non-contact fire pump cooling water. Please note that, as stated in the Engineering Report, during normal operations the fire pumps are operated for only 30 minutes once each week.

10. C.2 Process Schematic for Wastewater Discharges

> *The diagram shows there is a boiler building in Area 300 and two product tanks are heated with steam. However it does not match with the wastewater collection/treatment system for Area 300 as provided in the engineering report. Please revise the diagram as appropriate.*

C.2 Process Schematic was provided in the Engineering Report as an attachment of the state wastewater discharge permit, which was included in the original 2013 Application for Site Certification. We have attached the most recent process schematic for wastewater discharges.

Please contact me at 206/431-2373 or at irina.makarow@abam.com, if you have any questions about this submittal. We look forward to further coordination with you, your staff, and EFSEC's consultants.

Sincerely,

Irina Makarow
Senior Environmental Project Manager

IM:DRS:nb
Attachments
Wastewater Characterization Report
PPV Inc. Treatability Plan
Schematics for Wastewater Discharges Process

cc w/attach: Kelly Flint, Savage Companies
Jay Derr, Van Ness Feldman

Water Treatment System Review

Report

23 May 2016

BergerABAM

Port of Vancouver/Vancouver, WA

Mr. Dan Shafar

DMS Main Office:
358 US Route One
Falmouth, ME 04105

Charles Bailey
(+1 207) 274-9712
cwbailey@nalco.com

Kenn Cygan
(+1 207) 8318115
kcygan@nalco.com

Stan Jenkins
(+44) 0-7736-354-111
sjenkins1x@nalco.com

April Yi
(+1 513) 225-3046
ayyyi@nalco.com

TABLE OF CONTENTS

Confidentiality Statement 2
Section I: Executive Summary 3
Results Summary 3
Water Characteristics 4
Initial Design with Reverse Osmosis/Sodium Zeolite Process 4
Section II: Abstract 4
Key Goals 4
Section III: Project Description 5
Operating Criteria 5
Cleaver-Brooks Chemistry Specifications 5
Water Sources 6
Methodology 10
Section IV: Evaluation 11
Modeling Observations 11
Water Inventory 11
Scenario Description 12
Scenario Evaluation 13
SCN_002 PROPOSED SCENARIO 13
Section V: Conclusions 15
Proposed Operations 15
Results Summary 15
Appendix A: City Water Analysis 16
Appendix B: Water Balance Diagrams 18
Appendix C: Analytical Detection Limits 19
Appendix D: Chemistry 20

©2016 Ecolab USA Inc. All Rights Reserved

CONFIDENTIALITY STATEMENT

This report contains information relating to the operations at the proposed west boiler house for the Port of Vancouver, Vancouver, WA. This information is confidential to each party, and as such this report should not be shared without the express written consent of all the parties involved.

Trade Marks

Ecolab, Nalco Water, Data Mobility Systems and the logos are trademarks of Ecolab USA Inc.

All other trademarks are the property of their respective owners.

CONFIDENTIALITY NOTICE: This document is intended solely for the use of the individual or entity to whom they are addressed and may contain confidential and privileged information protected by law. If you received this document in error, any review, use, dissemination, distribution, or copying of the document is strictly prohibited.

DISCLAIMER: Actual values may be different pending actual conditions. We make no warranty of any kind regarding the accuracy or sufficiency of the information contained herein due to various assumptions including proposed plant configuration and anticipated operating requirements as provided.

©2016 Ecolab USA Inc. All Rights Reserved

SECTION I: EXECUTIVE SUMMARY

Tesoro and Savage have formed a joint venture to build and operate the Vancouver Energy terminal. The proposed facility will receive and ship crude oil that originates in the midcontinent of North America and arrives at the Port of Vancouver USA by rail. The crude oil will be temporarily and safely stored in secure tanks, then transferred to customers' vessels to be shipped to West Coast oil refineries, and converted into transportation fuels and other products for U.S. consumption.

BergerABAM is providing consulting services to Tesoro and Savage on the feasibility of constructing this facility. As part of this project, BergerABAM need to obtain an environmental permit from either the state or city authorities, but require more detailed information on the expected discharge characteristics from the new facility.

Nalco has been requested to supply expertise to support the development of the project. Nalco has been requested to develop the waste water characteristics for a scenario based the following specific operating criteria.

1. **Scenarios:** The following scenario was evaluated.
    a. Average water flows based on two Cleaver Brook boilers running (SCN_000)
    b. City water feeding the boilers treated with a reverse osmosis (RO) unit followed by an off-site regenerated sodium zeolite softener (SCN_002)

RESULTS SUMMARY

- The design & operating parameters result in boiler feed water that meets all the Cleaver Brooks boiler water chemistry specifications.

- The design & operating parameters result in waste water that meets all the chemistry limits for waste water discharge.

©2016 Ecolab USA Inc. All Rights Reserved

WATER CHARACTERISTICS

INITIAL DESIGN WITH REVERSE OSMOSIS/SODIUM ZEOLITE PROCESS

1. Water flow characteristics
    a. Boiler blowdown details can be seen in Table 2 and chemistry Appendix C
        i. Cleaver Brooks specifications are met
        ii. Sulfite levels are present in the blowdown
        iii. Phosphate is present in the blowdown from city water PO_4
    b. Total waste water details can be seen in Table 3 and Table 4 and chemistry Appendix C

SECTION II: ABSTRACT

This engineering study included gathering of information on the conceptual design and extensive use of a proprietary modeling software program that replicates specified expected operating conditions of the facility. This involved computer based holistic modeling of the plant water and process systems.

KEY GOALS

1. Establish reliable water balance for the conceptual design and specified operating parameters
    a. Hydraulic flows
    b. Ionic chemistry
2. Determine the water characteristics of the following flows
    a. Boiler blowdown
    b. Total waste water
    c. Boiler feedwater
    d. Boiler cycle make up
    e. Steam condensate

©2016 Ecolab USA Inc. All Rights Reserved

SECTION III: PROJECT DESCRIPTION

OPERATING CRITERIA

Port of Vancouver, WA		
Scenario_000		
Operational Parameters		
Number of Boilers	3	
Rated Boiler Capacity each	51,750	pph
Boiler Operating	2	
Boilers on Standby	1	
Operating Pressure	125	psig
Steam Production Total	83,830	pph
Condensate Return	67,064	pph
Blowdown %	4.0%	

CLEAVER-BROOKS CHEMISTRY SPECIFICATIONS

TOTAL HARDNESS	1 PPM MAXIMUM
TOTAL ALKALINITY	600 PPM MAXIMUM
TOTAL SILICA	150 PPM MAXIMUM
IRON CONTENT	0.1 PPM MAXIMUM
PH	8.5 – 10.5
TOTAL DISSOLVED SOLIDS	2,200 TO 2,500 PPM
OXYGEN CONTENT	0 PPM
CARBON DIOXIDE	0 PPM

(SOURCE: CLEAVER-BROOKS, INC.)

©2016 Ecolab USA Inc. All Rights Reserved

WATER SOURCES

The water chemistry of the city water source (during the sampling week February 11, 2016) can be classified as slightly hard water with moderate alkalinity concentration. The hardness is primarily temporary hardness which implies lime softening can be effective in reducing hardness, alkalinity, TDS and silica as well. The reactive silica level is very high and is of concern in managing the boiler water chemistry within the OEM's water specifications.

Table 1 summarizes these critical chemistry parameters that drive water processes required to manage the water consumption and waste water discharge volume.

Table 1 City Water Chemistry

KEY WATER CONSTITUENTS	City Water
ALL UNITS IN mg/L (unless otherwise specified)	SCN_000
Ca	33.0000
K	3.3000
Li	ND
Mg	9.7000
Na	6.4000
Sr	0.1220
Zn	0.0200
Cl	6.9000
HCO3	131.4833
NO3	15.0000
PO4	0.3679
SO4	10.0000
pH su	7.7000
SiO2	48.0000

City water chemistry based on sample taken of Vancouver city water at the Nalco manufacturing plant in Vancouver, WA. The sample was analyzed through ICP for metals and IC for anions. Alkalinity was tested with auto-titration and pH with standard lab bench pH meter.

ICP: Inductively Coupled Plasma Spectroscopy

IC: Ion chromatography

See Appendix C for detection limits

©2016 Ecolab USA Inc. All Rights Reserved

Table 2: Boiler Blowdown Chemistry

KEY WATER CONSTITUENTS	Boiler BD
ALL UNITS IN mg/L (unless otherwise specified)	SCN_002
Ca	ND
K	1.0205
Mg	ND
Na	99.2036
Zn	0.0062
Cl	2.1339
HCO3	17.7951
NO3	4.6389
OH	NC
PO4	0.1138
SO3	112.5702
SO4	3.8133
Conductivity µS/cm	339.8661
pH su	10.3037
SiO2	15.3267
TDS	271.8929
Temperature °F	95.0000

Note: Elements and compounds that are not listed were either not tested (NT) or below analytical procedure detection limit (ND). There are also other values that are not applicable (NA) to this process or are calculated values that cannot be calculated (NC) on this water chemistry. A complete list can be found in Appendix D

©2016 Ecolab USA Inc. All Rights Reserved

Table 4 Drain Sump Chemistry & Specification

KEY WATER CONSTITUENTS	Final Waste
ALL UNITS IN mg/L (unless otherwise specified)	SCN_002
Ag	ND
As	ND
Ca	100.8204
Cd	ND
Cr	ND
Cu	ND
Hg	ND
K	10.1931
Mg	29.6351
Mo	ND
Na	32.0165
Ni	ND
Pb	ND
Se	ND
Tl	ND
Zn	0.0618
Cl	21.3128
CN	ND
HCO3	400.3494
NO3	47.1287
OH	ND
PO4	1.1365
SO3	12.2498
SO4	37.9369
BOD5	6.4283
Conductivity µS/cm	869.5330
FOG	7.7139
pH su	8.4188
SiO2	148.3151
TDS	695.6264
Temperature °F	75.7740

All values in mg/L unless other wise specified

©2016 Ecolab USA Inc. All Rights Reserved

Table 4 Drain Sump Chemistry & City of Vancouver Discharge Limit

KEY WATER CONSTITUENTS	City of Vancouver Discharge Limit	SCN_002
ALL UNITS IN mg/L (unless otherwise specified)	Final Waste Water Discharge	Final Waste Water Discharge
Ag	1.130000	ND
As	0.220000	ND
Cd	0.140000	ND
Cr	7.220000	ND
Cu	3.670000	ND
Hg	0.008000	ND
Mo	0.420000	ND
Ni	0.900000	ND
Pb	0.440000	ND
Se	0.310000	ND
Tl	0.530000	ND
Zn	1.640000	0.061776
CN	0.470000	NT
BOD5	500.000000	6.428280
FOG	50.000000	7.713936
pH su	10.000000	8.418850
Temperature °F	104.000000	75.774029

<u>All values meet waste specification base.</u>

Chromium value is for total Cr (Cr^{+3} and Cr^{+6}).
A nominal amount of BOD and FOG was added to the sanitary waste flow. Also additional amount to FOG was added to the condensate that is delivered to the floor drains.

©2016 Ecolab USA Inc. All Rights Reserved

METHODOLOGY

DMS was supplied with the original design diagrams, expected operating parameters and water chemistry analyses from Nalco. DMS then developed a line diagram model of the water balance using Visio and the proprietary DMS-Water™ software system to replicate the proposed operating conditions of the facility.

DMS evaluated the proposed plant configurations regarding water chemistry based on operations feedback and our intimate knowledge of practical industrial water treatment as it pertains to steam plant process operations. The results of these studies were captured in this report.

The scope of the work can be found in Appendix A.

Disclaimer:

The enclosed information is based on an average chemistry for the city water source. DMS-Water™ modeling was matched to a snapshot of chemistry data that indicates that our modeling sufficiently represents the water balance and system. Conditions such as incursion of air borne debris into the cooling tower and plant operational changes can cause actual conditions to differ from our modeling. While actual chemistry conditions and chemical costs most likely will differ from our modeling, the implied improvements and actual costs should be reflected with actual operations.

©2016 Ecolab USA Inc. All Rights Reserved

SECTION IV: EVALUATION

MODELING OBSERVATIONS

- Boiler blowdown chemistry complies with both ASME and Cleaver-Brooks silica, alkalinity and pH specifications
- Waste water chemistry and flow complies with expected discharge permits.

WATER INVENTORY

Table 4 Incoming Water Inventory

Water In (gpm)	SCN_002
City Water	
• City Water to Plant	48.1
Subtotal	48.1
Total Water In	48.1

Table 5 Outgoing Water Inventory

Water Out (gpm)	SCN_002
Evaporation	
• Misc. condensate loss 1	9.1
• Misc. condensate loss 2	17.9
Subtotal	27.0
Final Discharge	
• Final Discharge	15.6
Subtotal	15.6
Tank-Waste Manual	
• Rail car condensate losses	5.5
Subtotal	5.5
Total Water Out	48.1

©2016 Ecolab USA Inc. All Rights Reserved

SCENARIO DESCRIPTION

DMS investigated five (5) alternative designs to address the goals of this engineering study, and following discussion with BergerABAM chose SCN_002 as the design that best meets the objectives of this project.

1. Determine the water characteristics
    a. Boiler blowdown
    b. Total waste water
    c. Boiler feedwater
    d. Boiler cycle makeup
    e. Steam condensate
2. Meet the water specifications for boiler water and waste water discharge.

.

©2016 Ecolab USA Inc. All Rights Reserved

SCENARIO EVALUATION

SCN_002 PROPOSED SCENARIO

This is the Base Case of the new facility for the proposed west boiler house. It utilizes the design and operating conditions agreed between Nalco and BergerABAM.

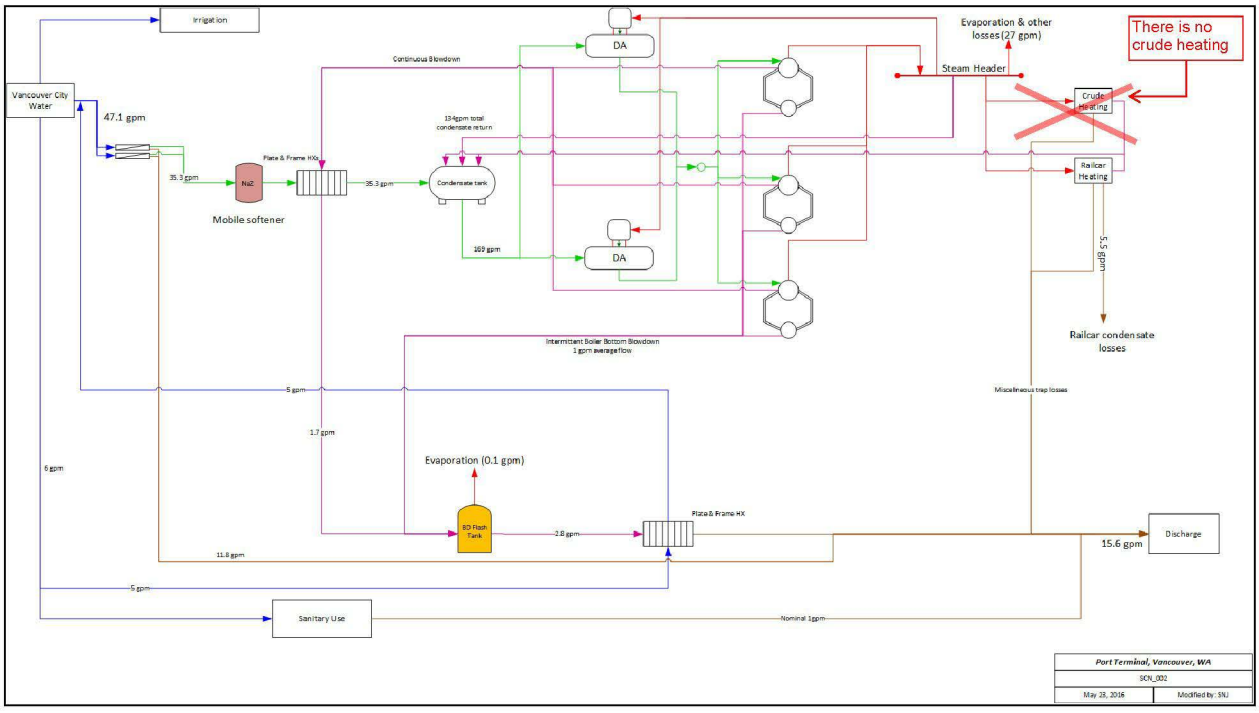

Summary: The incoming city water is treated with a reverse osmosis unit followed by an off-site regenerated (mobile) sodium zeolite softener. Blowdown water from the boilers is cooled by two plate and frame heat exchangers, both using water that will ultimately feed the boilers. The first heat exchanger cools the blowdown with softened water that feeds the deaerator. The second heat exchanger uses fresh city water prior to feeding the reverse osmosis unit.

Results: This case established that the boiler chemistry meets both ASME and Cleaver-Brooks boiler water chemistry specification for silica, pH and other ion concentrations. The boiler blowdown chemistry contains sulfite and phosphate. The sulfite is the results of boiler water oxygen scavenger use and the phosphate is the results of phosphate in the city water make up.

©2016 Ecolab USA Inc. All Rights Reserved

Table 6 SCN_002 Boiler Blowdown Chemistry

KEY WATER CONSTITUENTS	SCN_002	
ALL UNITS IN mg/L (unless otherwise specified)	Boiler BD	Boiler BD Specification
Ca	0.0000	1.0
K	1.0205	
Mg	0.0000	
Na	99.2036	
Zn	0.0062	
Cl	2.1339	
HCO3	17.7951	
NO3	4.6389	
OH	0.0000	
PO4	0.1138	
SO3	112.5702	
SO4	3.8133	
Conductivity µS/cm	339.8661	
pH su	10.3037	8.5-10.5
SiO2	15.3267	150
TDS	271.8929	2,200
Temperature °F	95.0000	

©2016 Ecolab USA Inc. All Rights Reserved

SECTION V: CONCLUSIONS

PROPOSED OPERATIONS

Scenario: The following scenario was evaluated.

a. Average water flows based on two Cleaver Brook boilers running
b. City water feeding the boilers treated with a reverse osmosis (RO) unit followed by an off-site regenerated sodium zeolite softener.

RESULTS SUMMARY

- The design & operating parameters result in boiler feed water that meets all the Cleaver Brooks boiler water chemistry specifications.
- The design & operating parameters result in waste water that meets all the chemistry limits for waste water discharge.
- Detailed chemistry for all key water flows can be found in Appendix C.

©2016 Ecolab USA Inc. All Rights Reserved

APPENDIX A: CITY WATER ANALYSIS

Customer Analytical Services
1601 West Diehl Road Naperville IL60563-1198
Phone: 630-305-1000 Fax: 630-305-2921 Email: customeranalyticalservices@nalco.com

NALCO
An Ecolab Company

Final - Report Number: 1664169
VANCOUVER PLANT - 8510 FRUIT VALLEY RD - VANCOUVER - WA - USA
Representative: PETER KANDA

Sample Number	NW190302
Date Sampled	11-Feb-2016 14:00
Date Received	12-Feb-2016
Date Completed	17-Feb-2016
Date Authorized	17-Feb-2016

Water Analysis

This sample was analyzed as received, the results being as follows.

Sampling point: Vancouver City Water

Water

Acid Extractable Metals Test Method: CW14024	Filtered	Total
Aluminum (Al)	<0.03 mg/L	<0.03 mg/L
Barium (Ba)	0.009 mg/L	0.009 mg/L
Boron (B)	<0.02 mg/L	<0.02 mg/L
Cadmium (Cd)	<0.005 mg/L	<0.005 mg/L
Calcium (Ca)	33 mg/L	33 mg/L
Calcium (CaCO3)	82 mg/L	83 mg/L
Chromium (Cr)	<0.015 mg/L	<0.015 mg/L
Copper (Cu)	<0.03 mg/L	0.03 mg/L
Iron (Fe)	<0.02 mg/L	<0.02 mg/L
Lead (Pb)	<0.10 mg/L	<0.10 mg/L
Lithium (Li)	<0.005 mg/L	<0.005 mg/L
Magnesium (Mg)	9.7 mg/L	9.7 mg/L
Magnesium (CaCO3)	40 mg/L	40 mg/L
Manganese (Mn)	<0.005 mg/L	<0.005 mg/L
Molybdenum (Mo)	<0.04 mg/L	<0.04 mg/L
Nickel (Ni)	<0.01 mg/L	<0.01 mg/L
Phosphorus (P)	0.12 mg/L	0.12 mg/L
Potassium (K)	3.3 mg/L	3.3 mg/L
Silicon (Si)	22 mg/L	23 mg/L
Silica (SiO2)	48 mg/L	48 mg/L
Sodium (Na)	6.4 mg/L	6.4 mg/L
Sodium (CaCO3)	14 mg/L	14 mg/L
Strontium (Sr)	0.122 mg/L	0.123 mg/L
Vanadium (V)	<0.01 mg/L	<0.01 mg/L
Zinc (Zn)	0.02 mg/L	0.02 mg/L
Total Hardness (CaCO3)	120 mg/L	120 mg/L

COMPANY WITH QUALITY SYSTEM CERTIFIED BY DNV
= ISO 9001:2008 =

Authorized by Kimberly Jackson
Principal Chemist

Page 1 of 2

©2016 Ecolab USA Inc. All Rights Reserved

Customer Analytical Services
1601 West Diehl Road Naperville IL60563-1198
Phone: 630-305-1000 Fax: 630-305-2921 Email: customeranalyticalservices@nalco.com

NALCO
An Ecolab Company

Final Report Number: 1664169
VANCOUVER PLANT - 8510 FRUIT VALLEY RD - VANCOUVER - WA - USA
Representative: PETER KANDA

Sample Number	NW100302
Date Sampled	11-Feb-2016 14:00
Date Received	12-Feb-2016
Date Completed	17-Feb-2016
Date Authorized	17-Feb-2016

Water Analysis

This sample was analyzed as received, the results being as follows:

Sampling point: Vancouver City Water

Anions Test Method: CW15000	**Filtered**
Chloride (Cl)	6.9 mg/L
Nitrite (NO2)	<0.20 mg/L
Bromide (Br)	<0.20 mg/L
Nitrate (NO3)	15 mg/L
Sulfate (SO4)	10 mg/L
Chloride (CaCO3)	9.7 mg/L
Nitrate (CaCO3)	12 mg/L
Sulfate (CaCO3)	11 mg/L

Alkalinity Test Method: CW11059	**Total**
Total Alkalinity (CaCO3)	120 mg/L
Phenolphthalein Alkalinity (CaCO3)	<10 mg/L
Bicarbonate (CaCO3)	120 mg/L

Other Analytes	**Test Method**	**Total**
Conductivity at 25°C	CW11063	290 µS/cm
pH @ 25°C	CW11059	7.7 pH Units

COMPANY WITH
QUALITY SYSTEM
CERTIFIED BY DNV
= ISO 9001:2008 =

Authorized by Kimberly Jackson
Principal Chemist

©2016 Ecolab USA Inc. All Rights Reserved

APPENDIX B: WATER BALANCE DIAGRAMS

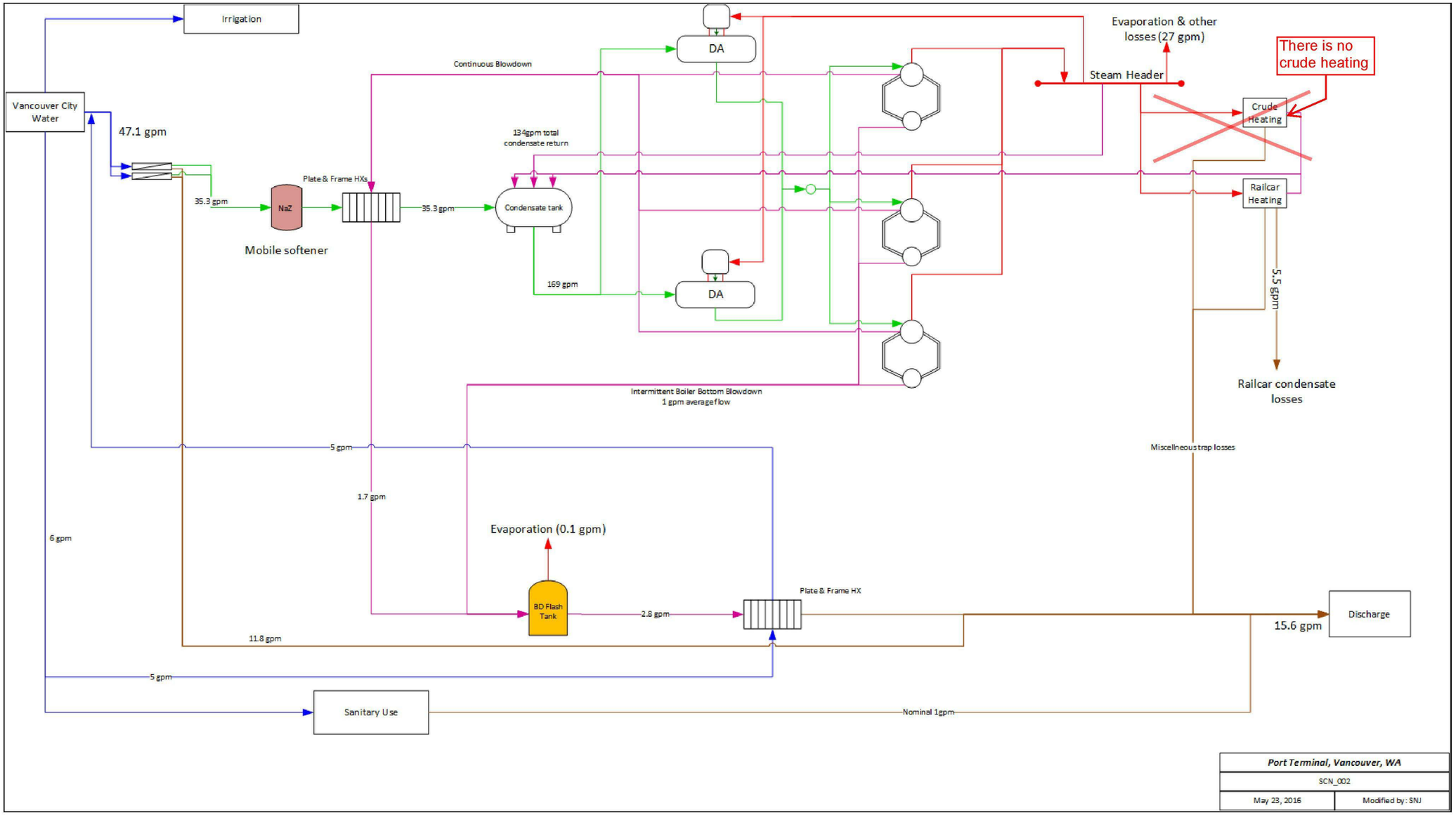

©2016 Ecolab USA Inc. All Rights Reserved

APPENDIX C: ANALYTICAL DETECTION LIMITS

Test Code Provides the following analyses(mg/l) for Total and Soluble cations and anions:
(Cations by ICP; Anions by IC)
(Alkalinity values by auto-titration)

	Reportable Limits mg/l *		Reportable Limits mg/l *
Aluminum (Al)	0.03	Chloride (Cl)	0.1
Barium (Ba)	0.005	Nitrite (NO2)	0.2
Boron (B)		Bromide (Br)	0.2
Cadmium (Cd)	0.005	Nitrate (NO3)	0.2
Calcium (Ca)	0.05	Sulfate (SO4)	0.2
Calcium (CaCO3)		Chloride (CaCO3)	
Chromium (Cr)	0.015	Nitrate (CaCO3)	
Copper (Cu)	0.03	Sulfate (CaCO3)	
Iron (Fe)	0.02		
Lead (Pb)	0.11	Total Alkalinity (CaCO3)	10
Lithium (Li)	0.005	Phenolphthalein Alkalinity (CaCO3)	10
Magnesium (Mg)	0.15	Bicarbonate (CaCO3)	
Magnesium (CaCO3)		Carbonate (CaCO3)	
Manganese (Mn)	0.005		
Molybdenum (Mo)	0.04	Inorganic Phosphate (PO4)	2
Nickel (Ni)	0.01	Ortho Phosphate (PO4)	2
Phosphorus (P)	0.03	Organic Phosphate (PO4)	2
Potassium (K)	0.12	Polyphosphate (PO4)	2
Silicon (Si)		Total Phosphate (PO4)	2
Silica (SiO2)			
Sodium (Na)		Conductivity at 25°C - meter	1
Sodium (CaCO3)		pH @ 25°C - meter	1
Strontium (Sr)	0.005		
Vanadium (V)	0.01		
Zinc (Zn)	0.01		

* Dependent on total dissolved solids concentration, and test method.

* Dependent on total dissolved solids concentration and test method.

©2016 Ecolab USA Inc. All Rights Reserved

APPENDIX D: CHEMISTRY

Scenario: Vancouver Terminal SCN_002
Flow Name: City Water
Flow Rate: 48.0563 gpm

Cation			
Symbol	Name	mg/L as $CaCO_3$	mg/L as Ion
Ag	Silver	ND	ND
Al	Aluminum	ND	ND
As	Arsenic	ND	ND
Au	Gold	ND	ND
B	Boron	ND	ND
Ba	Barium	0.0066	0.0090
Be	Beryllium	ND	ND
Ca	Calcium	82.4110	33.0000
Cd	Cadmium	ND	ND
Co	Cobalt	ND	ND
Cr	Chromium	ND	ND
Cu	Copper	ND	ND
Cu I	Copper (cuprous)	ND	ND
Fe	Iron	ND	ND
Fe II	Iron (ferrous)	ND	ND
H+	Hydronium	ND	ND
Hg	Mercury	ND	ND
K	Potassium	4.2238	3.3000
Li	Lithium	ND	ND
Mg	Magnesium	39.9442	9.7000
Mn	Manganese (Manganous)	ND	ND
Mo	Molybdenum	ND	ND
Na	Sodium	13.9313	6.4000
NH4	Ammonia	NT	NT
Ni	Nickel	ND	ND
Pb	Lead	ND	ND
S	Sulfur	NA	NA
Sb	Antimony	ND	ND
Se	Selenium	ND	ND
Si	Silicon	ND	ND
Sm	Samarium	ND	ND
Sn	Tin	ND	ND
Sr	Strontium	0.1394	0.1220
Ti	Titanium	ND	ND
Tl	Thallium (thallic)	ND	ND
U	Uranium (valence 4)	ND	ND
V	Vanadium	ND	ND
Zn	Zinc	0.0275	0.0200

©2016 Ecolab USA Inc. All Rights Reserved

Scenario: Vancouver Terminal SCN_002
Flow Name: City Water
Flow Rate: 48.0563 gpm

Anion			
Symbol	Name	mg/L as $CaCO_3$	mg/L as Ion
B4O7	Borate	ND	ND
Br	Bromide	ND	ND
Cl	Chloride	9.7397	6.9000
CN	Cyanide	ND	ND
CO3	Carbonate	ND	ND
F	Fluoride	NT	NT
HCO3	Bicarbonate	107.8371	131.4834
I	Iodide	ND	ND
MoO4	Molybdate	ND	ND
NO2	Nitrite	ND	ND
NO3	Nitrate	12.1063	15.0000
OH	Hydrate	ND	ND
P	Phosphorous (Valence 3)	ND	ND
PO4	Phosphate (as PO4)	0.5816	0.3679
SiO3	Silicate	ND	ND
SO3	Sulfite	ND	ND
SO4	Sulfate	10.4188	10.0000

©2016 Ecolab USA Inc. All Rights Reserved

Scenario: Vancouver Terminal SCN_002
Flow Name: City Water
Flow Rate: 48.0563 gpm

Other			
Symbol	**Name**	**mg/L as $CaCO_3$**	**mg/L as Ion**
$/1000 gal	Dollar per 1000 gallon	NT	NT
BOD5	5 Day Biochemical Oxygen Demand	NT	NT
CO2	Carbon Dioxide	NT	NT
CO2-gas	Carbon Dioxide Gas (Undissolved)	NT	NT
COD	Chemical Oxygen Demand	NT	NT
Conductivity	Conductivity	270.3779	270.3779
Enthalpy	Enthalpy	NC	NC
FOG	Free Oil and Grease	NT	NT
H2S	Hydrogen Sulfide	NT	NT
Ionic Strength	Ionic Strength	0.0042	0.0042
Langlier Stability Index	Langlier Stability Index	-0.3479	-0.3479
M Alkalinity	Total Alkalinity	107.8371	107.8371
NH3	Ammonia	NC	NC
O2	Oxygen	NT	NT
OCl	Hypoclorite	NT	NT
P Alkalinity	P Alkalinity	ND	ND
pH	pH	7.7000	7.7000
pHeq	pHeq	7.5180	7.5180
pHs	pHs	8.0479	8.0479
psia	Pounds per Square Inch Absolute	14.6960	14.6960
Puckorius Scale Index	Puckorius Scale Index	8.5778	8.5778
Ryznar Index	Ryznar Index	8.3958	8.3958
SAR	Saline Absorption Ratio	0.2511	0.2511
Screenings	Screenings	NA	NA
Silica Sol	Silica Sol	NA	NA
SiO2	Silica	39.9786	48.0000
SiO2-Colloidal	SiO2-Colloidal	0.8329	1.0000
Sulfur	Sulfur	NA	NA
TDS	Total Disolved Solids	216.3023	216.3023
TempF	Temperature Fahrenheit	70.0000	70.0000
TOC	Total Organic Carbon	NT	NT
Total Hardness	Total Hardness	122.3552	122.3552
TSS	Total Suspended Solids	NT	NT

©2016 Ecolab USA Inc. All Rights Reserved

Scenario: Vancouver Terminal SCN_002
Flow Name: Softened Water
Flow Rate: 35.2922 gpm

Cation			
Symbol	Name	mg/L as $CaCO_3$	mg/L as Ion
Ag	Silver	ND	ND
Al	Aluminum	ND	ND
As	Arsenic	ND	ND
Au	Gold	ND	ND
B	Boron	ND	ND
Ba	Barium	0.0001	0.0001
Be	Beryllium	0.0000	0.0000
Ca	Calcium	0.0102	0.0041
Cd	Cadmium	0.0000	0.0000
Co	Cobalt	0.0000	0.0000
Cr	Chromium	0.0000	0.0000
Cu	Copper	0.0000	0.0000
Cu I	Copper (cuprous)	0.0000	0.0000
Fe	Iron	0.0000	0.0000
Fe II	Iron (ferrous)	0.0000	0.0000
H+	Hydronium	0.0000	0.0000
Hg	Mercury	0.0000	0.0000
K	Potassium	0.0634	0.0495
Li	Lithium	0.0000	0.0000
Mg	Magnesium	0.0074	0.0018
Mn	Manganese (Manganous)	0.0000	0.0000
Mo	Molybdenum	0.0000	0.0000
Na	Sodium	2.0372	0.9359
NH4	Ammonia	0.0000	0.0000
Ni	Nickel	0.0000	0.0000
Pb	Lead	0.0000	0.0000
S	Sulfur	0.0000	0.0000
Sb	Antimony	0.0000	0.0000
Se	Selenium	0.0000	0.0000
Si	Silicon	0.0000	0.0000
Sm	Samarium	0.0000	0.0000
Sn	Tin	0.0000	0.0000
Sr	Strontium	0.0021	0.0018
Ti	Titanium	0.0000	0.0000
Tl	Thallium (thallic)	0.0000	0.0000
U	Uranium (valence 4)	0.0000	0.0000
V	Vanadium	0.0000	0.0000
Zn	Zinc	0.0004	0.0003

©2016 Ecolab USA Inc. All Rights Reserved

Scenario: Vancouver Terminal SCN_002
Flow Name: Softened Water
Flow Rate: 35.2922 gpm

Anion			
Symbol	Name	mg/L as $CaCO_3$	mg/L as Ion
B4O7	Borate	ND	ND
Br	Bromide	ND	ND
Cl	Chloride	0.1461	0.1035
CN	Cyanide	ND	ND
CO3	Carbonate	ND	ND
F	Fluoride	NT	NT
HCO3	Bicarbonate	1.5916	1.9406
I	Iodide	ND	ND
MoO4	Molybdate	ND	ND
NO2	Nitrite	ND	ND
NO3	Nitrate	0.1816	0.2250
OH	Hydrate	ND	ND
P	Phosphorous (Valence 3)	ND	ND
PO4	Phosphate (as PO4)	0.0087	0.0055
SiO3	Silicate	ND	ND
SO3	Sulfite	ND	ND
SO4	Sulfate	0.1927	0.1850

©2016 Ecolab USA Inc. All Rights Reserved

Scenario: Vancouver Terminal SCN_002
Flow Name: Softened Water
Flow Rate: 35.2922 gpm

Other			
Symbol	**Name**	**mg/L as $CaCO_3$**	**mg/L as Ion**
$/1000 gal	Dollar per 1000 gallon	0.0000	NC
BOD5	5 Day Biochemical Oxygen Demand	NT	NT
CO2	Carbon Dioxide	0.4103	0.3608
CO2-gas	Carbon Dioxide Gas (Undissolved)	0.8038	0.7069
COD	Chemical Oxygen Demand	NT	NT
Conductivity	Conductivity	4.3164	4.3164
Enthalpy	Enthalpy	NC	NC
FOG	Free Oil and Grease	ND	ND
H2S	Hydrogen Sulfide	NT	NT
Ionic Strength	Ionic Strength	0.0000	0.0000
Langlier Stability Index	Langlier Stability Index	-6.7348	-6.7348
M Alkalinity	Total Alkalinity	1.5916	1.5916
NH3	Ammonia	NT	NT
O2	Oxygen	NT	NT
OCl	Hypoclorite	NT	NT
P Alkalinity	P Alkalinity	ND	ND
pH	pH	6.8153	6.8153
pHeq	pHeq	4.8357	4.8357
pHs	pHs	13.5502	13.5502
psia	Pounds per Square Inch Absolute	44.6959	44.6959
Puckorius Scale Index	Puckorius Scale Index	22.2646	22.2646
Ryznar Index	Ryznar Index	20.2850	20.2850
SAR	Saline Absorption Ratio	3.0620	3.0620
Screenings	Screenings	NA	NA
Silica Sol	Silica Sol	NA	NA
SiO2	Silica	0.5997	0.7200
SiO2-Colloidal	SiO2-Colloidal	0.0125	0.0150
Sulfur	Sulfur	NA	NA
TDS	Total Disolved Solids	3.4531	3.4531
TempF	Temperature Fahrenheit	75.2618	75.2618
TOC	Total Organic Carbon	NT	NT
Total Hardness	Total Hardness	0.0176	0.0176
TSS	Total Suspended Solids	2.8509	2.8509

©2016 Ecolab USA Inc. All Rights Reserved

Scenario: Vancouver Terminal SCN_002
Flow Name: Condensate return
Flow Rate: 133.926 gpm

Cation			
Symbol	Name	mg/L as $CaCO_3$	mg/L as Ion
Ag	Silver	ND	ND
Al	Aluminum	ND	ND
As	Arsenic	ND	ND
Au	Gold	ND	ND
B	Boron	ND	ND
Ba	Barium	ND	ND
Be	Beryllium	ND	ND
Ca	Calcium	ND	ND
Cd	Cadmium	ND	ND
Co	Cobalt	ND	ND
Cr	Chromium	ND	ND
Cu	Copper	ND	ND
Cu I	Copper (cuprous)	ND	ND
Fe	Iron	ND	ND
Fe II	Iron (ferrous)	ND	ND
H+	Hydronium	ND	ND
Hg	Mercury	ND	ND
K	Potassium	0.0008	0.0006
Li	Lithium	ND	ND
Mg	Magnesium	ND	ND
Mn	Manganese (Manganous)	ND	ND
Mo	Molybdenum	ND	ND
Na	Sodium	0.1260	0.0579
NH4	Ammonia	ND	ND
Ni	Nickel	ND	ND
Pb	Lead	ND	ND
S	Sulfur	ND	ND
Sb	Antimony	ND	ND
Se	Selenium	ND	ND
Si	Silicon	ND	ND
Sm	Samarium	ND	ND
Sn	Tin	ND	ND
Sr	Strontium	ND	ND
Ti	Titanium	ND	ND
Tl	Thallium (thallic)	ND	ND
U	Uranium (valence 4)	ND	ND
V	Vanadium	ND	ND
Zn	Zinc	ND	ND

©2016 Ecolab USA Inc. All Rights Reserved

Scenario: Vancouver Terminal SCN_002
Flow Name: Condensate return
Flow Rate: 133.926 gpm

Anion			
Symbol	Name	mg/L as $CaCO_3$	mg/L as Ion
B4O7	Borate	ND	ND
Br	Bromide	ND	ND
Cl	Chloride	0.0018	0.0012
CN	Cyanide	ND	ND
CO3	Carbonate	0.0298	0.0179
F	Fluoride	0.0000	0.0000
HCO3	Bicarbonate	0.0085	0.0104
I	Iodide	ND	ND
MoO4	Molybdate	ND	ND
NO2	Nitrite	ND	ND
NO3	Nitrate	0.0022	0.0027
OH	Hydrate	ND	ND
P	Phosphorous (Valence 3)	ND	ND
PO4	Phosphate (as PO4)	0.0001	0.0001
SiO3	Silicate	NA	NA
SO3	Sulfite	0.0821	0.0657
SO4	Sulfate	0.0023	0.0022

©2016 Ecolab USA Inc. All Rights Reserved

Scenario: Vancouver Terminal SCN_002
Flow Name: Condensate return
Flow Rate: 133.926 gpm

Other			
Symbol	**Name**	**mg/L as $CaCO_3$**	**mg/L as Ion**
$/1000 gal	Dollar per 1000 gallon	NC	NC
BOD5	5 Day Biochemical Oxygen Demand	NT	NT
CO2	Carbon Dioxide	NT	NT
CO2-gas	Carbon Dioxide Gas (Undissolved)	0.2035	0.1790
COD	Chemical Oxygen Demand	NT	NT
Conductivity	Conductivity	0.1984	0.1984
Enthalpy	Enthalpy	NC	NC
FOG	Free Oil and Grease	NT	NT
H2S	Hydrogen Sulfide	NT	NT
Ionic Strength	Ionic Strength	NC	NC
Langlier Stability Index	Langlier Stability Index	NC	NC
M Alkalinity	Total Alkalinity	0.0383	0.0383
NH3	Ammonia	NT	NT
O2	Oxygen	NT	NT
OCl	Hypoclorite	NT	NT
P Alkalinity	P Alkalinity	0.0149	0.0149
pH	pH	7.5337	7.5337
pHeq	pHeq	2.4644	2.4644
pHs	pHs	0.0000	0.0000
psia	Pounds per Square Inch Absolute	19.6960	19.6960
Puckorius Scale Index	Puckorius Scale Index	NC	NC
Ryznar Index	Ryznar Index	NC	NC
SAR	Saline Absorption Ratio	NC	NC
Screenings	Screenings	NA	NA
Silica Sol	Silica Sol	NA	NA
SiO2	Silica	0.0001	0.0001
SiO2-Colloidal	SiO2-Colloidal	ND	ND
Sulfur	Sulfur	NA	NA
TDS	Total Disolved Solids	0.1587	0.1587
TempF	Temperature Fahrenheit	227.1465	227.1465
TOC	Total Organic Carbon	NT	NT
Total Hardness	Total Hardness	NC	NC
TSS	Total Suspended Solids	0.0345	0.0345

©2016 Ecolab USA Inc. All Rights Reserved

Scenario: Vancouver Terminal SCN_002
Flow Name: Boiler Feed Water
Flow Rate: 169.218 gpm

Cation			
Symbol	Name	mg/L as $CaCO_3$	mg/L as Ion
Ag	Silver	ND	ND
Al	Aluminum	ND	ND
As	Arsenic	ND	ND
Au	Gold	ND	ND
B	Boron	ND	ND
Ba	Barium	ND	ND
Be	Beryllium	ND	ND
Ca	Calcium	0.0021	0.0009
Cd	Cadmium	ND	ND
Co	Cobalt	ND	ND
Cr	Chromium	ND	ND
Cu	Copper	ND	ND
Cu I	Copper (cuprous)	ND	ND
Fe	Iron	ND	ND
Fe II	Iron (ferrous)	ND	ND
H+	Hydronium	ND	ND
Hg	Mercury	ND	ND
K	Potassium	0.0138	0.0108
Li	Lithium	ND	ND
Mg	Magnesium	0.0015	0.0004
Mn	Manganese (Manganous)	ND	ND
Mo	Molybdenum	0.0000	0.0000
Na	Sodium	1.5724	0.7224
NH4	Ammonia	ND	ND
Ni	Nickel	ND	ND
Pb	Lead	ND	ND
S	Sulfur	ND	ND
Sb	Antimony	ND	ND
Se	Selenium	ND	ND
Si	Silicon	ND	ND
Sm	Samarium	ND	ND
Sn	Tin	ND	ND
Sr	Strontium	0.0004	0.0004
Ti	Titanium	ND	ND
Tl	Thallium (thallic)	ND	ND
U	Uranium (valence 4)	ND	ND
V	Vanadium	ND	ND
Zn	Zinc	0.0001	0.0001

©2016 Ecolab USA Inc. All Rights Reserved

Scenario: Vancouver Terminal SCN_002
Flow Name: Boiler Feed Water
Flow Rate: 169.218 gpm

Anion			
Symbol	Name	mg/L as $CaCO_3$	mg/L as Ion
B4O7	Borate	ND	ND
Br	Bromide	ND	ND
Cl	Chloride	0.0319	0.0226
CN	Cyanide	ND	ND
CO3	Carbonate	1.3142	0.7879
F	Fluoride	NT	NT
HCO3	Bicarbonate	0.0959	0.1169
I	Iodide	ND	ND
MoO4	Molybdate	ND	ND
NO2	Nitrite	ND	ND
NO3	Nitrate	0.0396	0.0491
OH	Hydrate	ND	ND
P	Phosphorous (Valence 3)	ND	ND
PO4	Phosphate (as PO4)	0.0019	0.0012
SiO3	Silicate	NT	NT
SO3	Sulfite	0.0650	0.0520
SO4	Sulfate	0.0420	0.0403

©2016 Ecolab USA Inc. All Rights Reserved

Scenario: Vancouver Terminal SCN_002
Flow Name: Boiler Feed Water
Flow Rate: 169.218 gpm

Other			
Symbol	**Name**	**mg/L as $CaCO_3$**	**mg/L as Ion**
$/1000 gal	Dollar per 1000 gallon	NC	NC
BOD5	5 Day Biochemical Oxygen Demand	NT	NT
CO2	Carbon Dioxide	NT	NT
CO2-gas	Carbon Dioxide Gas (Undissolved)	NT	NT
COD	Chemical Oxygen Demand	NT	NT
Conductivity	Conductivity	2.2561	2.2561
Enthalpy	Enthalpy	NC	NC
FOG	Free Oil and Grease	ND	ND
H2S	Hydrogen Sulfide	NT	NT
Ionic Strength	Ionic Strength	NC	NC
Langlier Stability Index	Langlier Stability Index	-3.6228	-3.6228
M Alkalinity	Total Alkalinity	1.4101	1.4101
NH3	Ammonia	NT	NT
O2	Oxygen	NT	NT
OCl	Hypoclorite	NT	NT
P Alkalinity	P Alkalinity	0.6571	0.6571
pH	pH	9.1021	9.1021
pHeq	pHeq	4.7586	4.7586
pHs	pHs	12.7249	12.7249
psia	Pounds per Square Inch Absolute	24.6959	24.6959
Puckorius Scale Index	Puckorius Scale Index	20.6912	20.6912
Ryznar Index	Ryznar Index	16.3478	16.3478
SAR	Saline Absorption Ratio	5.1753	5.1753
Screenings	Screenings	NA	NA
Silica Sol	Silica Sol	NA	NA
SiO2	Silica	0.1252	0.1503
SiO2-Colloidal	SiO2-Colloidal	0.0026	0.0031
Sulfur	Sulfur	NA	NA
TDS	Total Disolved Solids	1.8049	1.8049
TempF	Temperature Fahrenheit	240.0000	240.0000
TOC	Total Organic Carbon	NT	NT
Total Hardness	Total Hardness	0.0037	0.0037
TSS	Total Suspended Solids	0.6219	0.6219

©2016 Ecolab USA Inc. All Rights Reserved

Scenario: Vancouver Terminal SCN_002
Flow Name: Boiler BD
Flow Rate: 1.69218 gpm

Cation			
Symbol	Name	mg/L as $CaCO_3$	mg/L as Ion
Ag	Silver	ND	ND
Al	Aluminum	ND	ND
As	Arsenic	ND	ND
Au	Gold	ND	ND
B	Boron	ND	ND
Ba	Barium	ND	ND
Be	Beryllium	ND	ND
Ca	Calcium	ND	ND
Cd	Cadmium	ND	ND
Co	Cobalt	ND	ND
Cr	Chromium	ND	ND
Cu	Copper	ND	ND
Cu I	Copper (cuprous)	ND	ND
Fe	Iron	ND	ND
Fe II	Iron (ferrous)	ND	ND
H+	Hydronium	ND	ND
Hg	Mercury	ND	ND
K	Potassium	1.3062	1.0205
Li	Lithium	ND	ND
Mg	Magnesium	ND	ND
Mn	Manganese (Manganous)	ND	ND
Mo	Molybdenum	ND	ND
Na	Sodium	215.9435	99.2036
NH4	Ammonia	ND	ND
Ni	Nickel	ND	ND
Pb	Lead	ND	ND
S	Sulfur	ND	ND
Sb	Antimony	ND	ND
Se	Selenium	ND	ND
Si	Silicon	ND	ND
Sm	Samarium	ND	ND
Sn	Tin	ND	ND
Sr	Strontium	ND	ND
Ti	Titanium	ND	ND
Tl	Thallium (thallic)	ND	ND
U	Uranium (valence 4)	ND	ND
V	Vanadium	ND	ND
Zn	Zinc	0.0085	0.0062

©2016 Ecolab USA Inc. All Rights Reserved

Scenario: Vancouver Terminal SCN_002
Flow Name: Boiler BD
Flow Rate: 1.69218 gpm

Anion			
Symbol	Name	mg/L as $CaCO_3$	mg/L as Ion
B4O7	Borate	ND	ND
Br	Bromide	ND	ND
Cl	Chloride	3.0121	2.1339
CN	Cyanide	ND	ND
CO3	Carbonate	51.0323	30.5973
F	Fluoride	0.0000	0.0000
HCO3	Bicarbonate	14.5948	17.7951
I	Iodide	ND	ND
MoO4	Molybdate	ND	ND
NO2	Nitrite	ND	ND
NO3	Nitrate	3.7440	4.6389
OH	Hydrate	ND	ND
P	Phosphorous (Valence 3)	ND	ND
PO4	Phosphate (as PO4)	0.1799	0.1138
SiO3	Silicate	NA	NA
SO3	Sulfite	140.7221	112.5702
SO4	Sulfate	3.9730	3.8133

©2016 Ecolab USA Inc. All Rights Reserved

Scenario: Vancouver Terminal SCN_002
Flow Name: Boiler BD
Flow Rate: 1.69218 gpm

Other			
Symbol	**Name**	**mg/L as $CaCO_3$**	**mg/L as Ion**
$/1000 gal	Dollar per 1000 gallon	NC	NC
BOD5	5 Day Biochemical Oxygen Demand	NT	NT
CO2	Carbon Dioxide	NT	NT
CO2-gas	Carbon Dioxide Gas (Undissolved)	NT	NT
COD	Chemical Oxygen Demand	NT	NT
Conductivity	Conductivity	339.8661	339.8661
Enthalpy	Enthalpy	NC	NC
FOG	Free Oil and Grease	ND	ND
H2S	Hydrogen Sulfide	NT	NT
Ionic Strength	Ionic Strength	0.0042	0.0042
Langlier Stability Index	Langlier Stability Index	0.0000	0.0000
M Alkalinity	Total Alkalinity	65.6271	65.6271
NH3	Ammonia	NT	NT
O2	Oxygen	NT	NT
OCl	Hypoclorite	NT	NT
P Alkalinity	P Alkalinity	25.5162	25.5162
pH	pH	10.3037	10.3037
pHeq	pHeq	7.2020	7.2020
pHs	pHs	NC	NC
psia	Pounds per Square Inch Absolute	14.6960	14.6960
Puckorius Scale Index	Puckorius Scale Index	NC	NC
Ryznar Index	Ryznar Index	NC	NC
SAR	Saline Absorption Ratio	NC	NC
Screenings	Screenings	NA	NA
Silica Sol	Silica Sol	NA	NA
SiO2	Silica	12.7654	15.3267
SiO2-Colloidal	SiO2-Colloidal	ND	ND
Sulfur	Sulfur	NA	NA
TDS	Total Disolved Solids	271.8929	271.8929
TempF	Temperature Fahrenheit	95.0000	95.0000
TOC	Total Organic Carbon	NT	NT
Total Hardness	Total Hardness	NC	NC
TSS	Total Suspended Solids	59.1845	59.1845

©2016 Ecolab USA Inc. All Rights Reserved

Scenario: Vancouver Terminal SCN_002
Flow Name: RO Waste Water
Flow Rate: 11.7641 gpm

Cation			
Symbol	Name	mg/L as $CaCO_3$	mg/L as Ion
Ag	Silver	ND	ND
Al	Aluminum	ND	ND
As	Arsenic	ND	ND
Au	Gold	ND	ND
B	Boron	ND	ND
Ba	Barium	0.0259	0.0356
Be	Beryllium	0.0000	0.0000
Ca	Calcium	325.9355	130.5150
Cd	Cadmium	ND	ND
Co	Cobalt	ND	ND
Cr	Chromium	ND	ND
Cu	Copper	ND	ND
Cu I	Copper (cuprous)	ND	ND
Fe	Iron	ND	ND
Fe II	Iron (ferrous)	ND	ND
H+	Hydronium	ND	ND
Hg	Mercury	ND	ND
K	Potassium	16.7051	13.0515
Li	Lithium	ND	ND
Mg	Magnesium	157.9792	38.3635
Mn	Manganese (Manganous)	ND	ND
Mo	Molybdenum	ND	ND
Na	Sodium	59.9000	27.5178
NH4	Ammonia	ND	ND
Ni	Nickel	ND	ND
Pb	Lead	ND	ND
S	Sulfur	ND	ND
Sb	Antimony	ND	ND
Se	Selenium	ND	ND
Si	Silicon	ND	ND
Sm	Samarium	ND	ND
Sn	Tin	ND	ND
Sr	Strontium	0.5512	0.4825
Ti	Titanium	ND	ND
Tl	Thallium (thallic)	ND	ND
U	Uranium (valence 4)	ND	ND
V	Vanadium	ND	ND
Zn	Zinc	0.1086	0.0791

©2016 Ecolab USA Inc. All Rights Reserved

Scenario: Vancouver Terminal SCN_002
Flow Name: RO Waste Water
Flow Rate: 11.7641 gpm

Anion			
Symbol	Name	mg/L as $CaCO_3$	mg/L as Ion
B4O7	Borate	ND	ND
Br	Bromide	ND	ND
Cl	Chloride	38.5206	27.2895
CN	Cyanide	ND	ND
CO3	Carbonate	ND	ND
F	Fluoride	NT	NT
HCO3	Bicarbonate	421.6943	514.1622
I	Iodide	ND	ND
MoO4	Molybdate	ND	ND
NO2	Nitrite	ND	ND
NO3	Nitrate	47.8805	59.3250
OH	Hydrate	ND	ND
P	Phosphorous (Valence 3)	ND	ND
PO4	Phosphate (as PO4)	2.3004	1.4552
SiO3	Silicate	NA	NA
SO3	Sulfite	ND	ND
SO4	Sulfate	50.8097	48.7672

©2016 Ecolab USA Inc. All Rights Reserved

Scenario: Vancouver Terminal SCN_002
Flow Name: RO Waste Water
Flow Rate: 11.7641 gpm

Other			
Symbol	**Name**	**mg/L as $CaCO_3$**	**mg/L as Ion**
$/1000 gal	Dollar per 1000 gallon	NC	NC
BOD5	5 Day Biochemical Oxygen Demand	NT	NT
CO2	Carbon Dioxide	0.4103	0.3608
CO2-gas	Carbon Dioxide Gas (Undissolved)	0.8038	0.7069
COD	Chemical Oxygen Demand	NT	NT
Conductivity	Conductivity	1076.3053	1076.3053
Enthalpy	Enthalpy	NC	NC
FOG	Free Oil and Grease	NT	NT
H2S	Hydrogen Sulfide	NT	NT
Ionic Strength	Ionic Strength	0.0166	0.0166
Langlier Stability Index	Langlier Stability Index	1.3187	1.3187
M Alkalinity	Total Alkalinity	421.6943	421.6943
NH3	Ammonia	NT	NT
O2	Oxygen	NT	NT
OCl	Hypoclorite	NT	NT
P Alkalinity	P Alkalinity	ND	ND
pH	pH	8.1808	8.1808
pHeq	pHeq	8.3856	8.3856
pHs	pHs	6.8621	6.8621
psia	Pounds per Square Inch Absolute	44.6959	44.6959
Puckorius Scale Index	Puckorius Scale Index	5.3387	5.3387
Ryznar Index	Ryznar Index	5.5435	5.5435
SAR	Saline Absorption Ratio	0.5430	0.5430
Screenings	Screenings	NA	NA
Silica Sol	Silica Sol	NA	NA
SiO2	Silica	158.1153	189.8400
SiO2-Colloidal	SiO2-Colloidal	3.2941	3.9550
Sulfur	Sulfur	NA	NA
TDS	Total Disolved Solids	861.0442	861.0442
TempF	Temperature Fahrenheit	75.2618	75.2618
TOC	Total Organic Carbon	NT	NT
Total Hardness	Total Hardness	483.9146	483.9146
TSS	Total Suspended Solids	0.0000	0.0000

©2016 Ecolab USA Inc. All Rights Reserved

Scenario: Vancouver Terminal SCN_002
Flow Name: Final Waste
Flow Rate: 15.5563 gpm

Cation			
Symbol	Name	mg/L as $CaCO_3$	mg/L as Ion
Ag	Silver	ND	ND
Al	Aluminum	ND	ND
As	Arsenic	ND	ND
Au	Gold	ND	ND
B	Boron	ND	ND
Ba	Barium	0.0200	0.0275
Be	Beryllium	0.0000	0.0000
Ca	Calcium	251.7791	100.8204
Cd	Cadmium	ND	ND
Co	Cobalt	ND	ND
Cr	Chromium	ND	ND
Cu	Copper	ND	ND
Cu I	Copper (cuprous)	ND	ND
Fe	Iron	ND	ND
Fe II	Iron (ferrous)	ND	ND
H+	Hydronium	ND	ND
Hg	Mercury	ND	ND
K	Potassium	13.0465	10.1931
Li	Lithium	ND	ND
Mg	Magnesium	122.0360	29.6351
Mn	Manganese (Manganous)	ND	ND
Mo	Molybdenum	ND	ND
Na	Sodium	69.6925	32.0165
NH4	Ammonia	ND	ND
Ni	Nickel	ND	ND
Pb	Lead	ND	ND
S	Sulfur	ND	ND
Sb	Antimony	ND	ND
Se	Selenium	ND	ND
Si	Silicon	ND	ND
Sm	Samarium	ND	ND
Sn	Tin	ND	ND
Sr	Strontium	0.4258	0.3727
Ti	Titanium	ND	ND
Tl	Thallium (thallic)	ND	ND
U	Uranium (valence 4)	ND	ND
V	Vanadium	ND	ND
Zn	Zinc	0.0848	0.0618

©2016 Ecolab USA Inc. All Rights Reserved

Scenario: Vancouver Terminal SCN_002
Flow Name: Final Waste
Flow Rate: 15.5563 gpm

Anion			
Symbol	Name	mg/L as $CaCO_3$	mg/L as Ion
B4O7	Borate	ND	ND
Br	Bromide	ND	ND
Cl	Chloride	30.0843	21.3128
CN	Cyanide	ND	ND
CO3	Carbonate	3.9780	2.3851
F	Fluoride	NT	NT
HCO3	Bicarbonate	328.3498	400.3494
I	Iodide	ND	ND
MoO4	Molybdate	ND	ND
NO2	Nitrite	ND	ND
NO3	Nitrate	38.0370	47.1287
OH	Hydrate	ND	ND
P	Phosphorous (Valence 3)	ND	ND
PO4	Phosphate (as PO4)	1.7966	1.1365
SiO3	Silicate	NA	NA
SO3	Sulfite	15.3133	12.2498
SO4	Sulfate	39.5258	37.9369

©2016 Ecolab USA Inc. All Rights Reserved

Scenario: Vancouver Terminal SCN_002
Flow Name: Final Waste
Flow Rate: 15.5563 gpm

Other			
Symbol	**Name**	**mg/L as $CaCO_3$**	**mg/L as Ion**
$/1000 gal	Dollar per 1000 gallon	NC	NC
BOD5	5 Day Biochemical Oxygen Demand	6.4283	6.4283
CO2	Carbon Dioxide	NT	NT
CO2-gas	Carbon Dioxide Gas (Undissolved)	NT	NT
COD	Chemical Oxygen Demand	NT	NT
Conductivity	Conductivity	869.5330	869.5330
Enthalpy	Enthalpy	NC	NC
FOG	Free Oil and Grease	7.7139	7.7139
H2S	Hydrogen Sulfide	NT	NT
Ionic Strength	Ionic Strength	0.0133	0.0133
Langlier Stability Index	Langlier Stability Index	1.3559	1.3559
M Alkalinity	Total Alkalinity	332.3278	332.3278
NH3	Ammonia	NT	NT
O2	Oxygen	NT	NT
OCl	Hypoclorite	NT	NT
P Alkalinity	P Alkalinity	1.9890	1.9890
pH	pH	8.4188	8.4188
pHeq	pHeq	8.2341	8.2341
pHs	pHs	7.0630	7.0630
psia	Pounds per Square Inch Absolute	37.3828	37.3828
Puckorius Scale Index	Puckorius Scale Index	5.8918	5.8918
Ryznar Index	Ryznar Index	5.7071	5.7071
SAR	Saline Absorption Ratio	0.7188	0.7188
Screenings	Screenings	NA	NA
Silica Sol	Silica Sol	NA	NA
SiO2	Silica	123.5298	148.3151
SiO2-Colloidal	SiO2-Colloidal	2.5446	3.0552
Sulfur	Sulfur	NA	NA
TDS	Total Disolved Solids	695.6264	695.6264
TempF	Temperature Fahrenheit	75.7740	75.7740
TOC	Total Organic Carbon	NT	NT
Total Hardness	Total Hardness	373.8151	373.8151
TSS	Total Suspended Solids	6.4404	6.4404

©2016 Ecolab USA Inc. All Rights Reserved

©2016 Ecolab USA Inc. All Rights Reserved

PPV Inc. Vancouver Energy Treatment Summary

General Information

PPV Inc. has been in operation since 2003 serving as the primary wastewater pretreatment and disposal facility in the Portland area. We serve companies large and small who generate nonhazardous wastewater but do not have the resources to treat it themselves before disposal. In addition to wastewater pretreatment we offer extraction and transport services through our subsidiary company Bravo Environmental, making us a comprehensive source for all your wastewater needs.

Waste Acceptance

At PPV we are permitted to accept and treat wastewater containing oil/metals, organics, and septic. Prior to accepting any new waste stream, we require analytical testing of the material that at least matches our prescribed analytical script, this allows us to identify problem contaminants for effective treatment. Analytical testing must be done through a certified third party laboratory. Using the analytical results clients fill out and return our Waste Information Profile (WIP). When the material arrives at our facility samples are taken to ensure that it matches how it is described in the WIP, If the material does not match the load is rejected and returned to the generator or held for further testing.

We do not accept wastes containing PCB's, cyanide, DMSO, glycols, fuel and fuel derivatives, solvents, pesticides, and other hazardous material. For a full list of what we cannot accept please see our Prohibited Compounds Form.

Treatment Process

Wastes with similar characteristics are segregated into separate holding tanks and treated in batches according to an assigned treatability plan. Treatability plans are specifically designed for each waste type and use a combination of physical and chemical treatment to effectively remove problem contaminants.

All material goes through a general treatment process that removes solids using filters, sieves, shakers, dissolved air flotation, and centrifuge. Oil/metal bearing wastewater goes through additional treatment in our Oil Water Separator to separate and remove oil from the water. Removed oil is sold to a processor and the water is discharged to the municipal sewer system.

QC Monitoring

Using our in-house laboratory, we conduct self-monitoring QC checks every day on outgoing effluent to ensure compliance with our permit. Additionally, we also conduct intermittent testing at random points within our treatment train.

Copyright © BergerABAM. All Rights Reserved.

PROCESS SCHEMATIC FOR WASTEWATER DISCHARGES

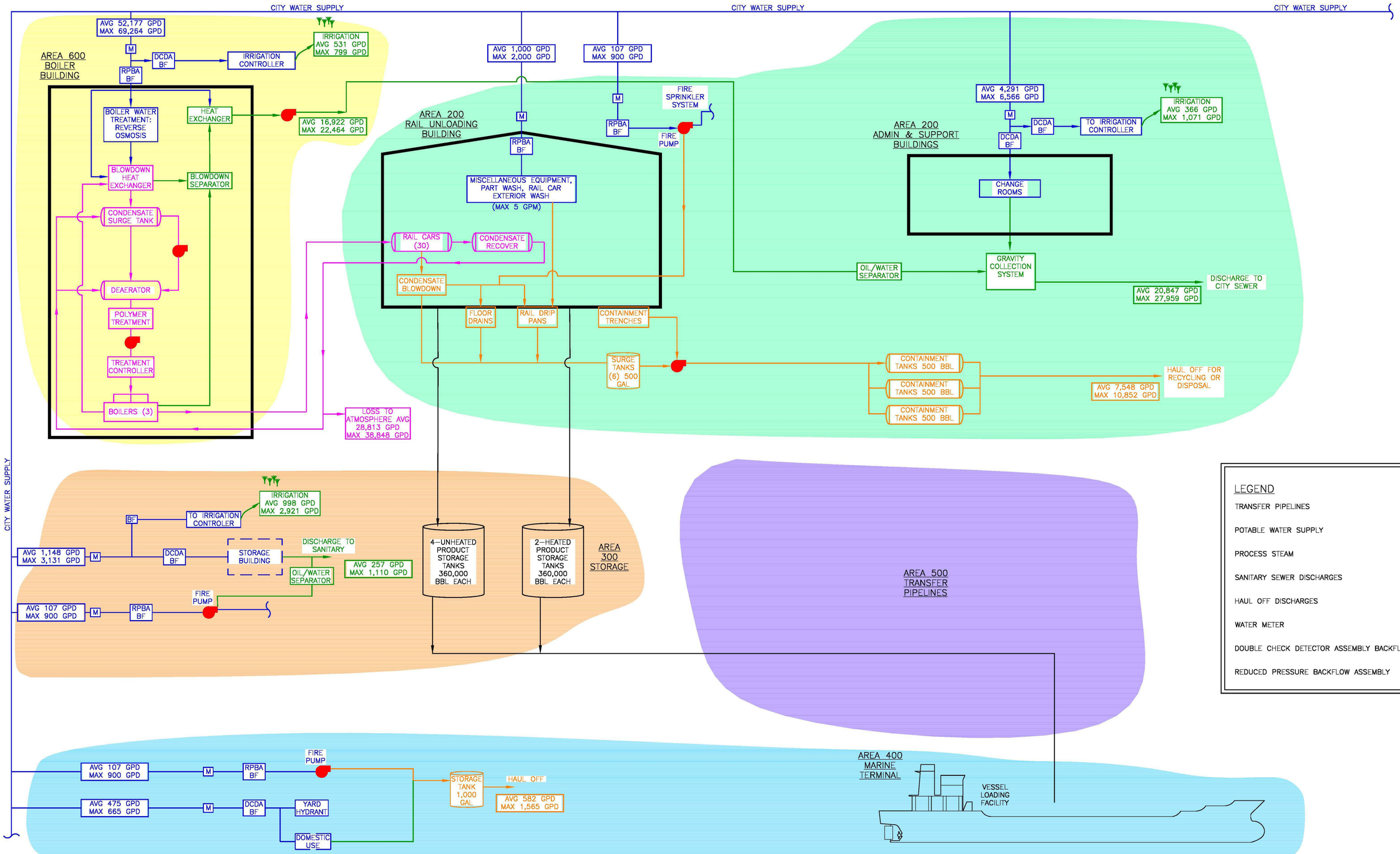

Last Saved by: Tony pritchett on: May 20, 2016 7:38 AM File: Q:\Vancouver\2013\A13.0267000\CADD\dwg\PRE-APP\PROCESS SCHEMATIC - WASTEWATER DISCHARGES.dwg

EX-0209-000057-TSS