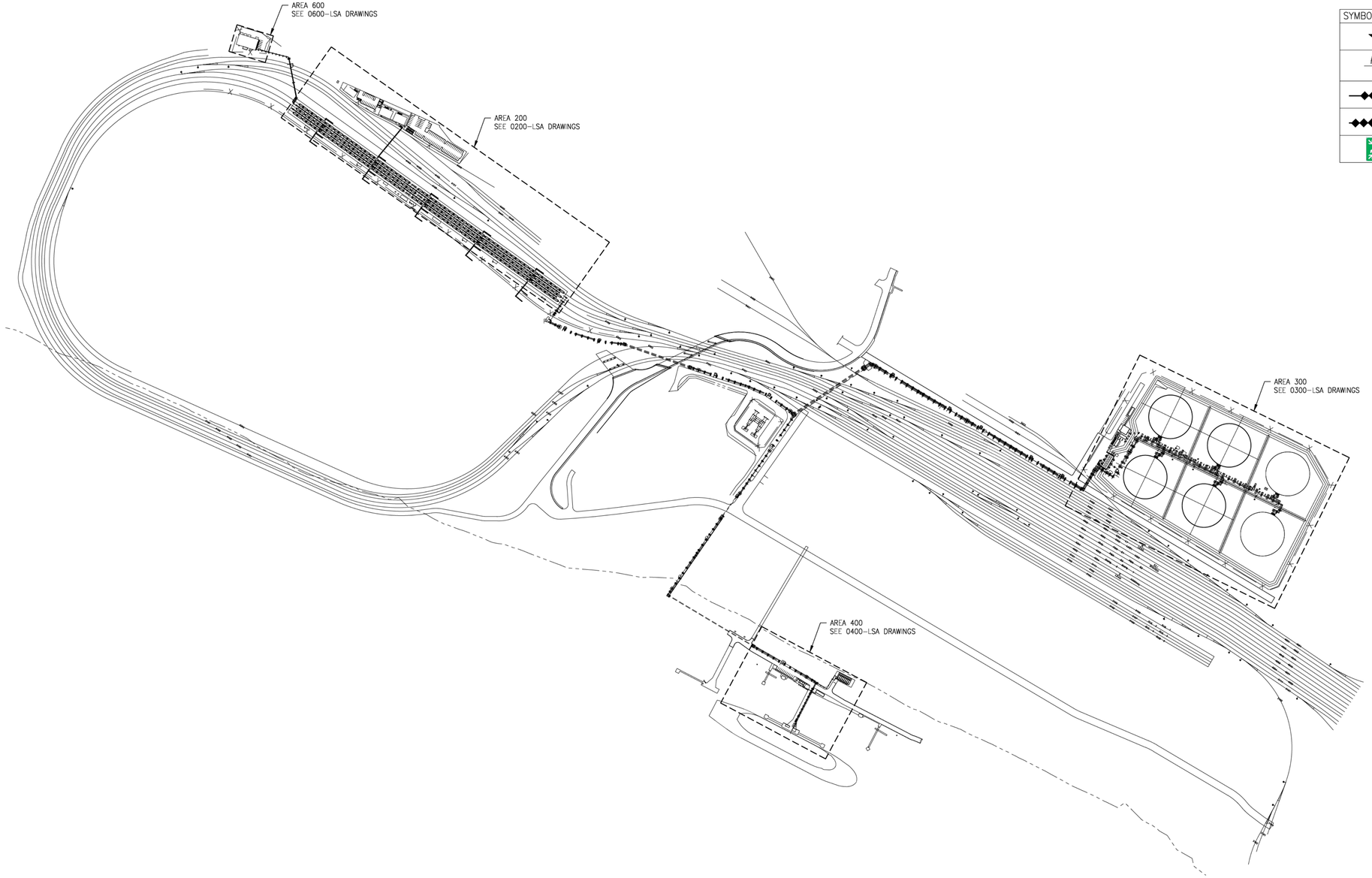

SYMBOLS LEGEND	DESCRIPTION	PROTECTIVE ELEMENTS
▼	EXIT – EXTERIOR	
#/#" / #"	ACCUMULATED EXIT WIDTH AT REQUIRED EXIT (CLEAR WIDTH)	OCCUPANTS / REQUIRED WIDTH PROVIDED WIDTH (BASED ON MOST RESTRICTIVE EXIT COMPONENT)
◆◆—◆◆	2 HOUR FIRE BARRIER	
◆◆◆—◆◆◆	3 HOUR FIRE BARRIER	
	MUSTER POINT	

GENERAL NOTES:

1. THESE DRAWINGS HAVE BEEN DEVELOPED IN CONJUNCTION WITH THE LIFE SAFETY ANALYSIS REPORT AND ARE ANCILLARY TO THE REPORT.
2. THESE DRAWINGS ARE CONCEPTUAL IN NATURE AND ARE ONLY MEANT TO SHOW THE DESIGN INTENT.

1 LIFE SAFETY ANALYSIS SITE PLAN
SCALE: 1" = 300'

TRUE NORTH

0 300' 600'

JOHN W. POOLE III
STATE OF WASHINGTON
24993
REGISTERED
PROFESSIONAL ENGINEER

PRELIMINARY, NOT FOR CONSTRUCTION

NO.	DATE	REVISION	BY	CK'D	APP

PRO3 DEFINITIVE DESIGN BUILD
PROCESS ▲ PROTECT ▲ PROCEED

POOLE FIRE PROTECTION

TESORO SAVAGE

THIS DRAWING CONTAINS PROPRIETARY AND PRIVILEGED INFORMATION OF TESORO SAVAGE PETROLEUM LLC AND SHALL NOT BE DISCLOSED OR USED FOR THE BENEFIT OF OTHERS WITHOUT PRIOR WRITTEN PERMISSION OF THE DRAWING OWNER.

CUSTOMER: TESORO SAVAGE PETROLEUM LLC

PROJECT: TESORO SAVAGE VANCOUVER ENERGY DISTRIBUTION TERMINAL
PORT OF VANCOUVER, WASHINGTON

DESCRIPTION: LIFE SAFETY ANALYSIS SHEET

DESIGN:	R. BENNETT	START DATE:	03-31-2014	SCALE:	AS NOTED
DRAWN:	D. FLAGOR	PRINT DATE:	07-14-2014	PROJECT MANAGER:	C. GLOTZBACH
CHECKED:	J. POOLE	APPROVED:	J. POOLE	SIZE:	24x36

DRAWING NUMBER	SHEET	REV.
0100-LSA-001	1/1	A

EX-0001-007545-PCE

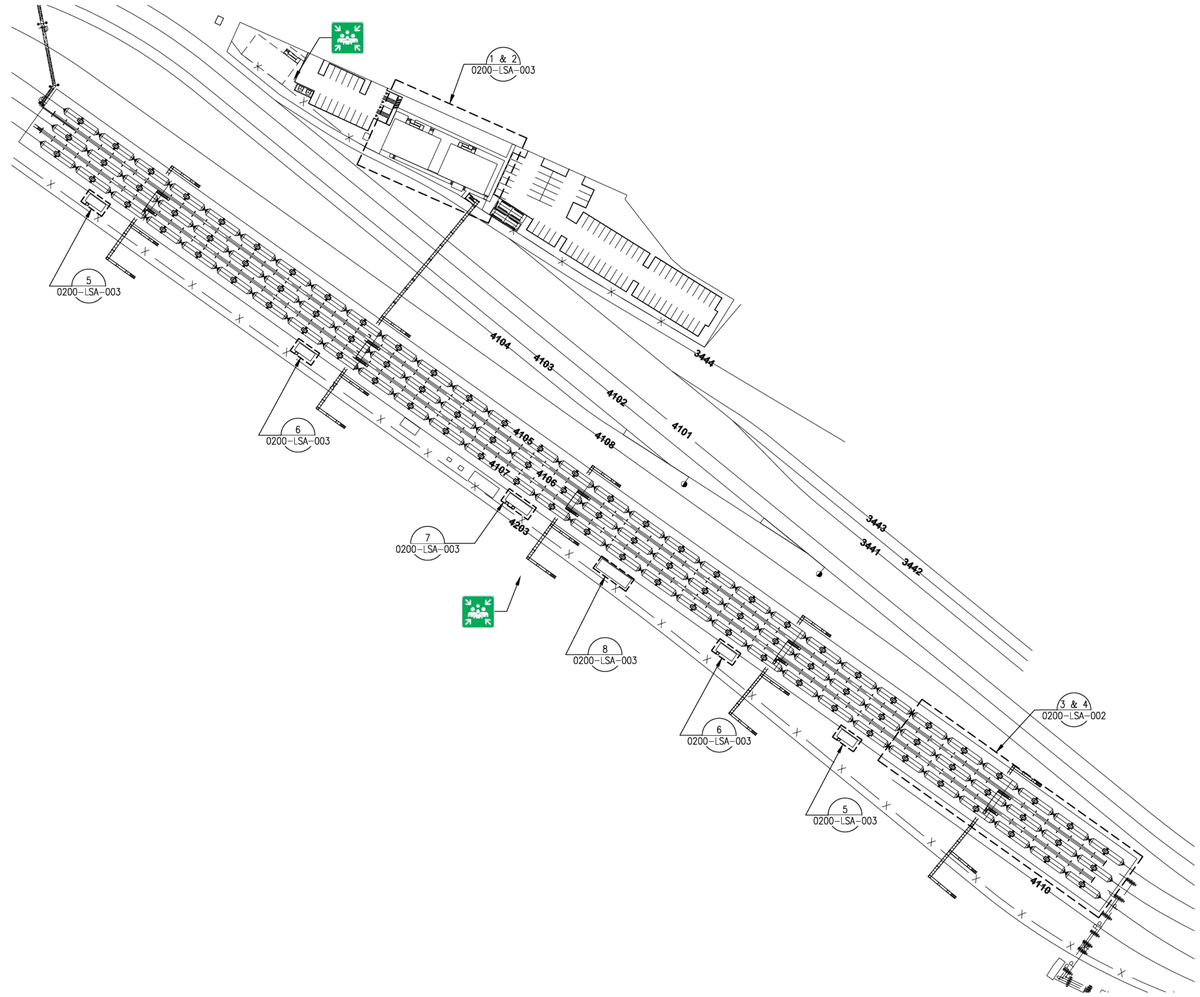

1 AREA 200 – LIFE SAFETY ANALYSIS SITE PLAN
SCALE: 1" = 100'

TRUE NORTH

0 100' 200'

PRELIMINARY, NOT FOR CONSTRUCTION

NO.	DATE	REVISION	BY	CK'D	APP

PRO3 DEFINITIVE DESIGN BUILD
PROCESS ▲ PROTECT ▲ PROCEED

POOLE FIRE PROTECTION

TESORO SAVAGE

THIS DRAWING CONTAINS PROPRIETARY AND PRIVILEGED INFORMATION OF TESORO SAVAGE PETROLEUM LLC AND SHALL NOT BE DISCLOSED OR USED FOR THE BENEFIT OF OTHERS WITHOUT PRIOR WRITTEN PERMISSION OF THE DRAWING OWNER.

CUSTOMER: TESORO SAVAGE PETROLEUM LLC

PROJECT: TESORO SAVAGE VANCOUVER ENERGY DISTRIBUTION TERMINAL
PORT OF VANCOUVER, WASHINGTON

DESCRIPTION: LIFE SAFETY ANALYSIS SHEET

DESIGN:	R. BENNETT	START DATE:	03-31-2014	SCALE:	AS NOTED
DRAWN:	D. FLAGOR	PRINT DATE:	07-14-2014	PROJECT MANAGER:	C. GLOTZBACH
CHECKED:	J. POOLE	APPROVED:	J. POOLE	SIZE:	24x36

DRAWING NUMBER	SHEET	REV.
0200-LSA-001	1/1	A

JOHN W. POOLE III
STATE OF WASHINGTON
14993
REGISTERED
PROFESSIONAL ENGINEER

EX-0001-007546-PCE

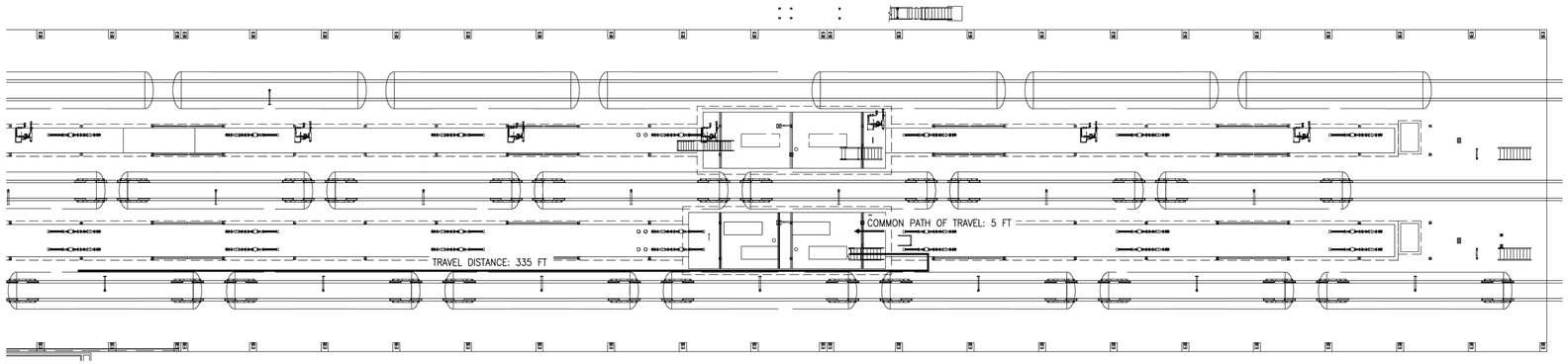

3 AREA 200 – TYPICAL LIFE SAFETY ANALYSIS UNLOADING BUILDING PLAN @ T/RAIL EL 32'–6"

SCALE: 1" = 20'

0 20' 40'

PLAN TRUE NORTH

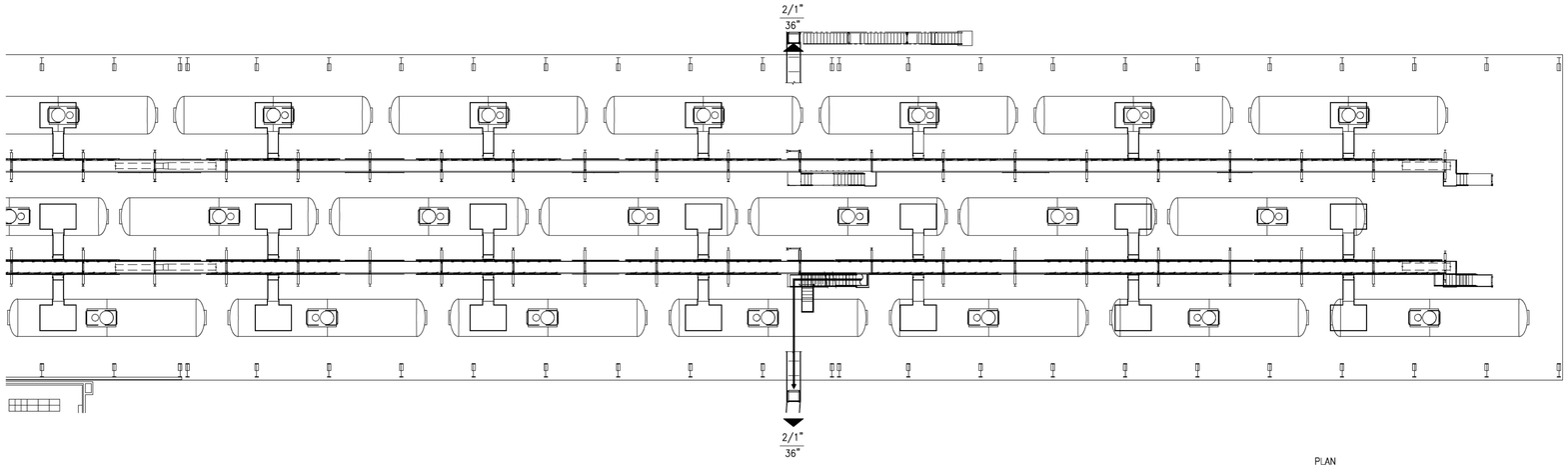

4 AREA 200 – TYPICAL LIFE SAFETY ANALYSIS UNLOADING BUILDING PLAN @ EL 57'–8"

SCALE: 1" = 20'

0 20' 40'

PLAN TRUE NORTH

JOHN W. POOLE III STATE OF WASHINGTON 34993 REGISTERED PROFESSIONAL ENGINEER

PRELIMINARY, NOT FOR CONSTRUCTION

NO.	DATE	REVISION	BY	CK'D	APP

PRO3 DEFINITIVE DESIGN BUILD PROCESS ▲ PROTECT ▲ PROCEED

POOLE FIRE PROTECTION

TESORO SAVAGE

THIS DRAWING CONTAINS PROPRIETARY AND PRIVILEGED INFORMATION OF TESORO SAVAGE PETROLEUM LLC AND SHALL NOT BE DISCLOSED OR USED FOR THE BENEFIT OF OTHERS WITHOUT PRIOR WRITTEN PERMISSION OF THE DRAWING OWNER.

CUSTOMER: TESORO SAVAGE PETROLEUM LLC

PROJECT: TESORO SAVAGE VANCOUVER ENERGY DISTRIBUTION TERMINAL
PORT OF VANCOUVER, WASHINGTON

DESCRIPTION: LIFE SAFETY ANALYSIS SHEET

DESIGN:	R. BENNETT	START DATE:	03-31-2014	SCALE:	AS NOTED
DRAWN:	D. FLAGOR	PRINT DATE:	07-14-2014	PROJECT MANAGER:	C. GLOTZBACH
CHECKED:	J. POOLE	APPROVED:	J. POOLE	SIZE:	24x36

DRAWING NUMBER	SHEET	REV.
0200-LSA-002	1/1	A

EX-0001-007547-PCE

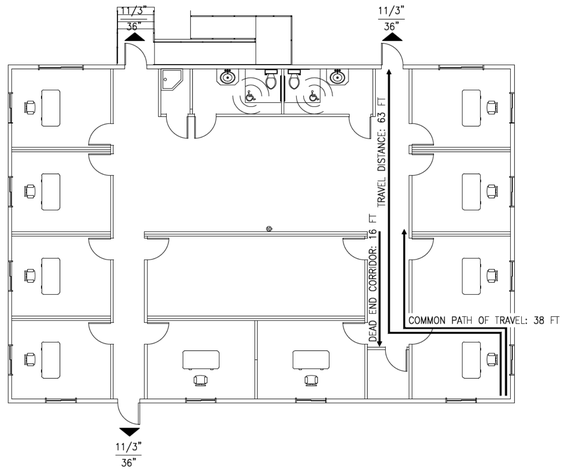

1 AREA 200 – LIFE SAFETY ANALYSIS OFFICE BUILDING PLAN
SCALE: 1" = 10'
0 10' 20'
PLAN TRUE NORTH

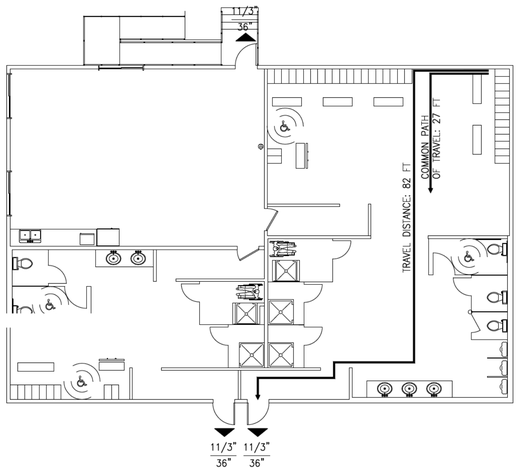

2 AREA 200 – LIFE SAFETY ANALYSIS CHANGE BUILDING PLAN
SCALE: 1" = 10'
0 10' 20'
PLAN TRUE NORTH

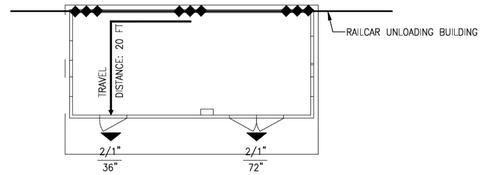

5 AREA 200 – LIFE SAFETY ANALYSIS E-HOUSE 1 & 5 PLAN
SCALE: 1/8" = 1'-0"
0 4' 8' 16'
PLAN TRUE NORTH

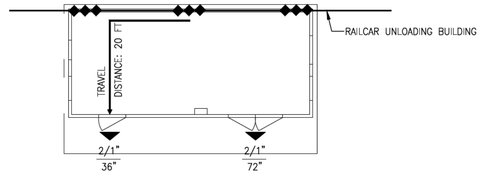

6 AREA 200 – LIFE SAFETY ANALYSIS E-HOUSE 2 & 4 PLAN
SCALE: 1/8" = 1'-0"
0 4' 8' 16'
PLAN TRUE NORTH

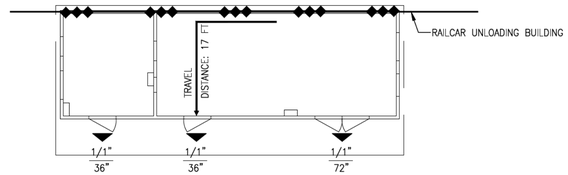

7 AREA 200 – LIFE SAFETY ANALYSIS CONTROL ROOM/E-HOUSE 3 PLAN
SCALE: 1/8" = 1'-0"
0 4' 8' 16'
PLAN TRUE NORTH

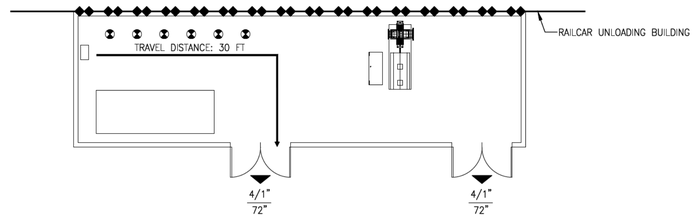

8 AREA 200 – LIFE SAFETY ANALYSIS FIRE PUMP AND FOAM BUILDING PLAN
SCALE: 1/8" = 1'-0"
0 4' 8' 16'
PLAN TRUE NORTH

JOHN W. POOLE III
STATE OF WASHINGTON
14993
REGISTERED
PROFESSIONAL ENGINEER

PRELIMINARY, NOT FOR CONSTRUCTION

NO.	DATE	REVISION	BY	CK'D	APP

PRO3 DEFINITIVE DESIGN BUILD
PROCESS ▲ PROTECT ▲ PROCEED

POOLE FIRE PROTECTION

TESORO SAVAGE

THIS DRAWING CONTAINS PROPRIETARY AND PRIVILEGED INFORMATION OF TESORO SAVAGE PETROLEUM LLC AND SHALL NOT BE DISCLOSED OR USED FOR THE BENEFIT OF OTHERS WITHOUT PRIOR WRITTEN PERMISSION OF THE DRAWING OWNER.

CUSTOMER: TESORO SAVAGE PETROLEUM LLC

PROJECT: TESORO SAVAGE VANCOUVER ENERGY DISTRIBUTION TERMINAL
PORT OF VANCOUVER, WASHINGTON

DESCRIPTION: LIFE SAFETY ANALYSIS SHEET

DESIGN:	R. BENNETT	START DATE:	03-31-2014	SCALE:	AS NOTED
DRAWN:	D. FLAGOR	PRINT DATE:	07-14-2014	PROJECT MANAGER:	C. GLOTZBACH
CHECKED:	J. POOLE	APPROVED:	J. POOLE	SIZE:	24x36

DRAWING NUMBER	SHEET	REV.
0200-LSA-003	1/1	A

EX-0001-007548-PCE

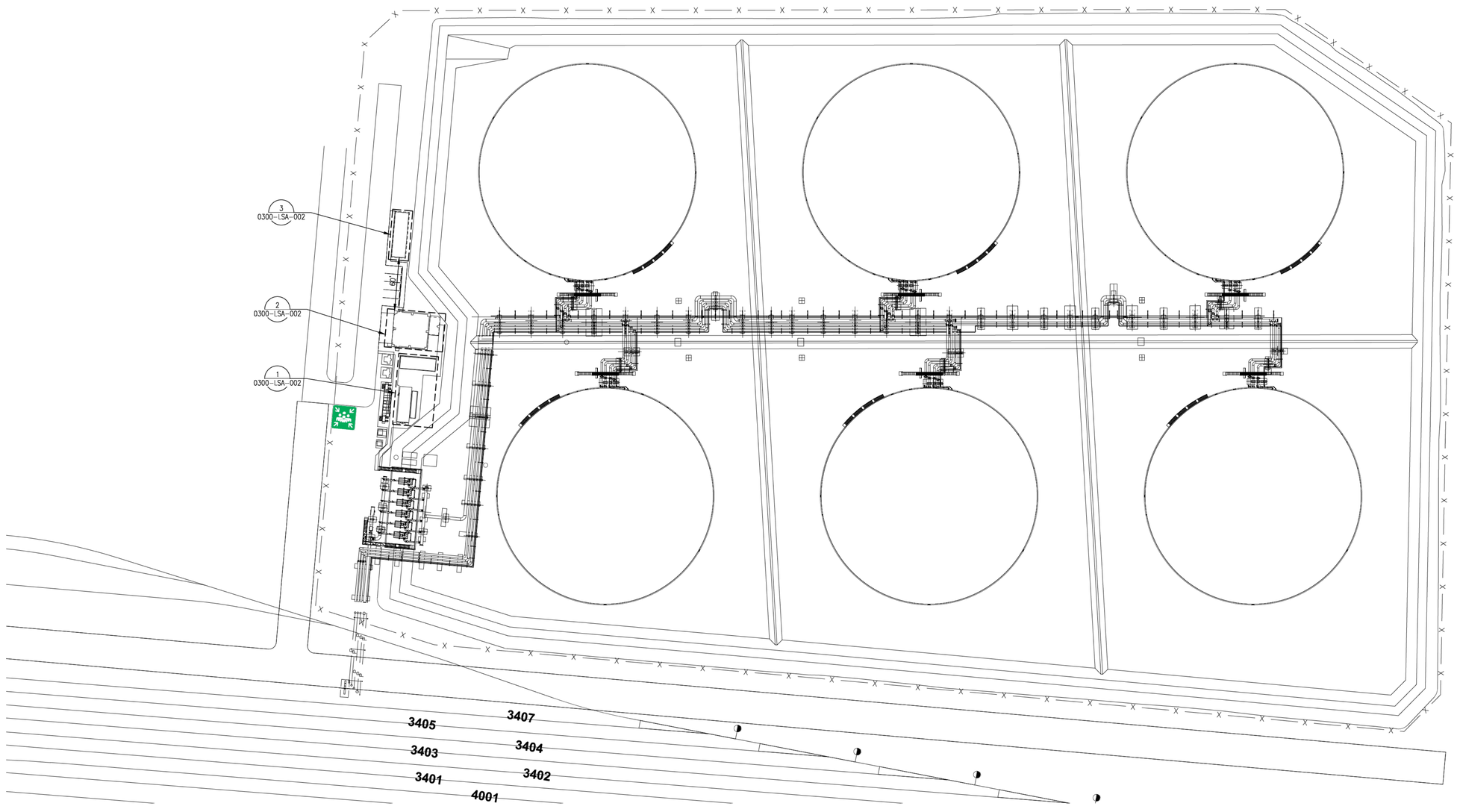

1 AREA 300 – LIFE SAFETY ANALYSIS SITE PLAN
SCALE: 1" = 60'

PLAN TRUE NORTH

0 60' 120'

JOHN W. POOLE III
STATE OF WASHINGTON
24993
REGISTERED PROFESSIONAL ENGINEER

PRELIMINARY, NOT FOR CONSTRUCTION

NO.	DATE	REVISION	BY	CK'D	APP

PRO3 DEFINITIVE DESIGN BUILD
PROCESS ▲ PROTECT ▲ PROCEED

POOLE FIRE PROTECTION

TESORO SAVAGE

THIS DRAWING CONTAINS PROPRIETARY AND PRIVILEGED INFORMATION OF TESORO SAVAGE PETROLEUM LLC AND SHALL NOT BE DISCLOSED OR USED FOR THE BENEFIT OF OTHERS WITHOUT PRIOR WRITTEN PERMISSION OF THE DRAWING OWNER.

CUSTOMER: TESORO SAVAGE PETROLEUM LLC

PROJECT: TESORO SAVAGE VANCOUVER ENERGY DISTRIBUTION TERMINAL
PORT OF VANCOUVER, WASHINGTON

DESCRIPTION: LIFE SAFETY ANALYSIS SHEET

DESIGN:	R. BENNETT	START DATE:	03-31-2014	SCALE:	AS NOTED
DRAWN:	D. FLAGOR	PRINT DATE:	07-14-2014	PROJECT MANAGER:	C. GLOTZBACH
CHECKED:	J. POOLE	APPROVED:	J. POOLE	SIZE:	24x36

DRAWING NUMBER	SHEET	REV.
0300-LSA-001	1/1	A

EX-0001-007549-PCE

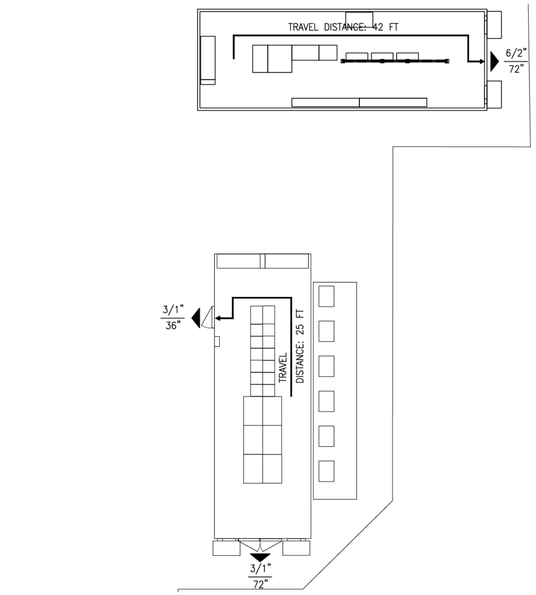

1 AREA 300 – LIFE SAFETY ANALYSIS E-HOUSE PLAN
SCALE: 1" = 10'
0 10' 20'
TRUE NORTH
PLAN NORTH

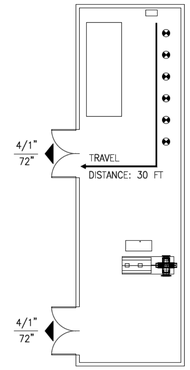

3 AREA 300 – LIFE SAFETY ANALYSIS FIRE PUMP AND FOAM BUILDING PLAN
SCALE: 1" = 10'
0 10' 20'
TRUE NORTH
PLAN NORTH

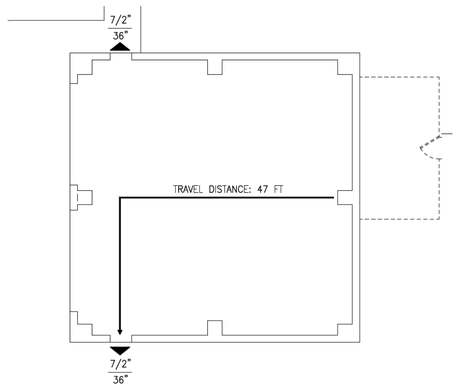

2 AREA 300 – LIFE SAFETY ANALYSIS STORAGE BUILDING PLAN
SCALE: 1" = 10'
0 10' 20'
TRUE NORTH
PLAN NORTH

JOHN W. POOLE III
STATE OF WASHINGTON
14993
REGISTERED
PROFESSIONAL ENGINEER

PRELIMINARY, NOT FOR CONSTRUCTION

NO.	DATE	REVISION	BY	CK'D	APP

PRO3 DEFINITIVE DESIGN BUILD
PROCESS ▲ PROTECT ▲ PROCEED

POOLE FIRE PROTECTION

TESORO SAVAGE

THIS DRAWING CONTAINS PROPRIETARY AND PRIVILEGED INFORMATION OF TESORO SAVAGE PETROLEUM LLC AND SHALL NOT BE DISCLOSED OR USED FOR THE BENEFIT OF OTHERS WITHOUT PRIOR WRITTEN PERMISSION OF THE DRAWING OWNER.

CUSTOMER: TESORO SAVAGE PETROLEUM LLC

PROJECT: TESORO SAVAGE VANCOUVER ENERGY DISTRIBUTION TERMINAL
PORT OF VANCOUVER, WASHINGTON

DESCRIPTION: LIFE SAFETY ANALYSIS SHEET

DESIGN:	R. BENNETT	START DATE:	03-31-2014	SCALE:	AS NOTED
DRAWN:	D. FLAGOR	PRINT DATE:	07-14-2014	PROJECT MANAGER:	C. GLOTZBACH
CHECKED:	J. POOLE	APPROVED:	J. POOLE	SIZE:	24x36

DRAWING NUMBER: 0300-LSA-002
SHEET: 1/1
REV: A

EX-0001-007550-PCE

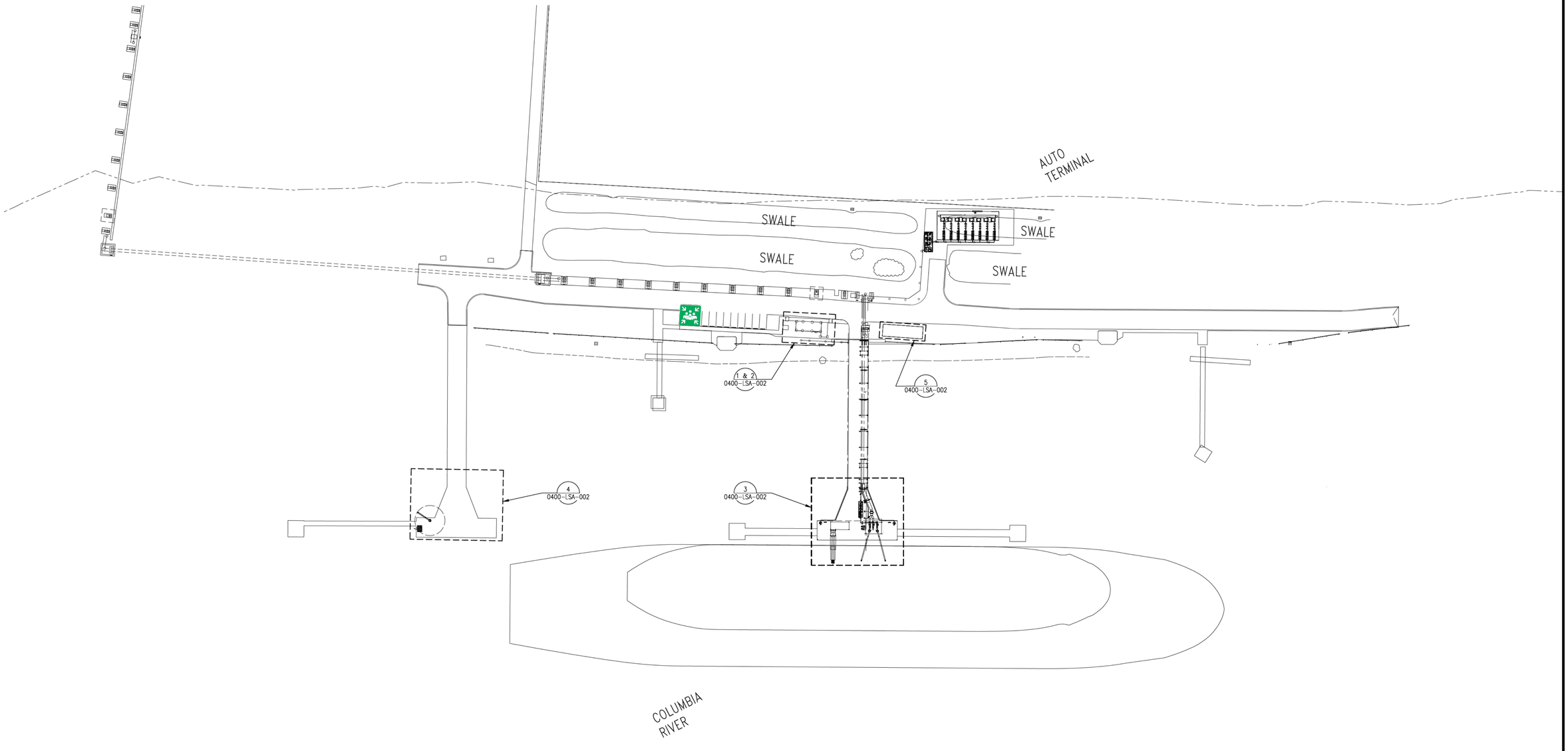

1 AREA 400 – LIFE SAFETY ANALYSIS SITE PLAN
SCALE: 1" = 60'

PLAN TRUE NORTH

0 60' 120'

PRELIMINARY, NOT FOR CONSTRUCTION

NO.	DATE	REVISION	BY	CK'D	APP

PRO3 DEFINITIVE DESIGN BUILD
PROCESS ▲ PROTECT ▲ PROCEED

POOLE FIRE PROTECTION

TESORO SAVAGE

THIS DRAWING CONTAINS PROPRIETARY AND PRIVILEGED INFORMATION OF TESORO SAVAGE PETROLEUM LLC AND SHALL NOT BE DISCLOSED OR USED FOR THE BENEFIT OF OTHERS WITHOUT PRIOR WRITTEN PERMISSION OF THE DRAWING OWNER.

CUSTOMER: TESORO SAVAGE PETROLEUM LLC

PROJECT: TESORO SAVAGE VANCOUVER ENERGY DISTRIBUTION TERMINAL
PORT OF VANCOUVER, WASHINGTON

DESCRIPTION: LIFE SAFETY ANALYSIS SHEET

DESIGN:	R. BENNETT	START DATE:	03-31-2014	SCALE:	AS NOTED
DRAWN:	D. FLAGOR	PRINT DATE:	07-14-2014	PROJECT MANAGER:	C. GLOTZBACH
CHECKED:	J. POOLE	APPROVED:	J. POOLE	SIZE:	24x36

DRAWING NUMBER	SHEET	REV.
0400-LSA-001	1/1	A

EX-0001-007551-PCE

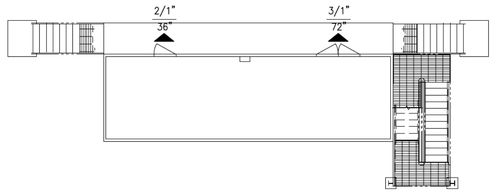

1 AREA 400 – LIFE SAFETY ANALYSIS CONTROL ROOM/E-HOUSE BOTTOM FLOOR PLAN
SCALE: 1" = 10'
0 10' 20'
PLAN NORTH / TRUE NORTH

2 AREA 400 – LIFE SAFETY ANALYSIS CONTROL ROOM/E-HOUSE UPPER FLOOR PLAN
SCALE: 1" = 10'
0 10' 20'
PLAN NORTH / TRUE NORTH

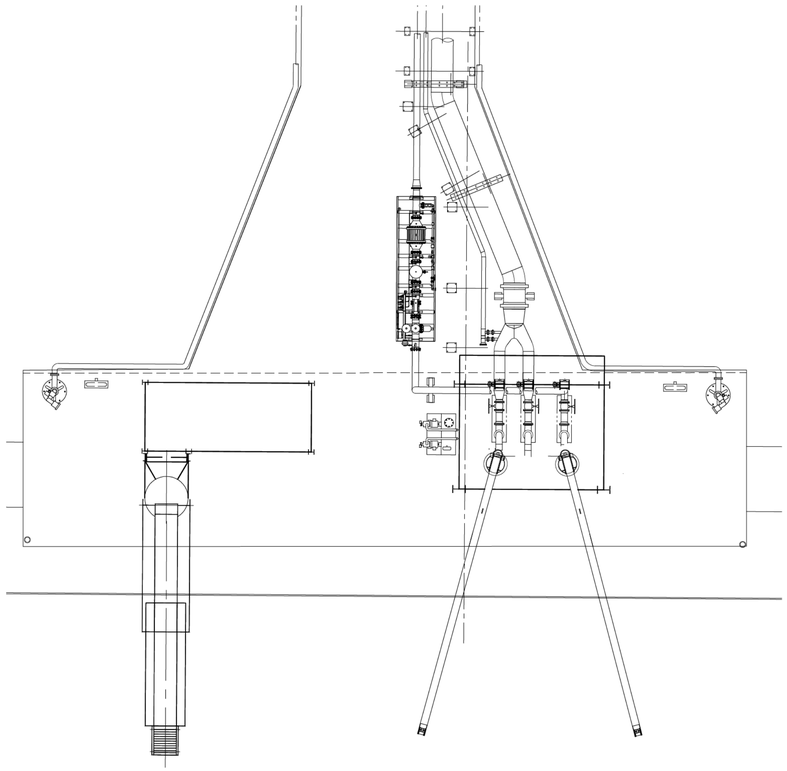

3 AREA 400 – LIFE SAFETY ANALYSIS BERTH 13 PLAN
SCALE: 1" = 10'
0 10' 20'
PLAN NORTH / TRUE NORTH

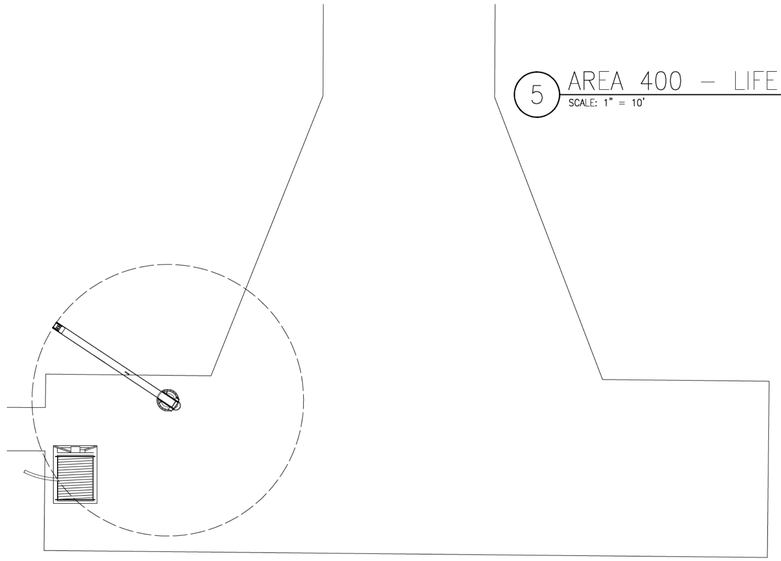

4 AREA 400 – LIFE SAFETY ANALYSIS BERTH 14 PLAN
SCALE: 1" = 10'
0 10' 20'
PLAN NORTH / TRUE NORTH

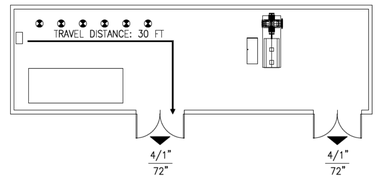

5 AREA 400 – LIFE SAFETY ANALYSIS FIRE PUMP AND FOAM BUILDING PLAN
SCALE: 1" = 10'
0 10' 20'
PLAN NORTH / TRUE NORTH

JOHN W. POOLE III
STATE OF WASHINGTON
34993
REGISTERED
PROFESSIONAL ENGINEER

PRELIMINARY, NOT FOR CONSTRUCTION

NO.	DATE	REVISION	BY	CK'D	APP

PRO3 DEFINITIVE DESIGN BUILD
PROCESS • PROTECT • PROCEED

POOLE FIRE PROTECTION

TESORO SAVAGE

THIS DRAWING CONTAINS PROPRIETARY AND PRIVILEGED INFORMATION OF TESORO SAVAGE PETROLEUM LLC AND SHALL NOT BE DISCLOSED OR USED FOR THE BENEFIT OF OTHERS WITHOUT PRIOR WRITTEN PERMISSION OF THE DRAWING OWNER.

CUSTOMER: TESORO SAVAGE PETROLEUM LLC

PROJECT: TESORO SAVAGE VANCOUVER ENERGY DISTRIBUTION TERMINAL
PORT OF VANCOUVER, WASHINGTON

DESCRIPTION: LIFE SAFETY ANALYSIS SHEET

DESIGN:	R. BENNETT	START DATE:	03-31-2014	SCALE:	AS NOTED
DRAWN:	D. FLAGOR	PRINT DATE:	07-14-2014	PROJECT MANAGER:	C. GLOTZBACH
CHECKED:	J. POOLE	APPROVED:	J. POOLE	SIZE:	24x36

DRAWING NUMBER	SHEET	REV.
0400-LSA-002	1/1	A

EX-0001-007552-PCE

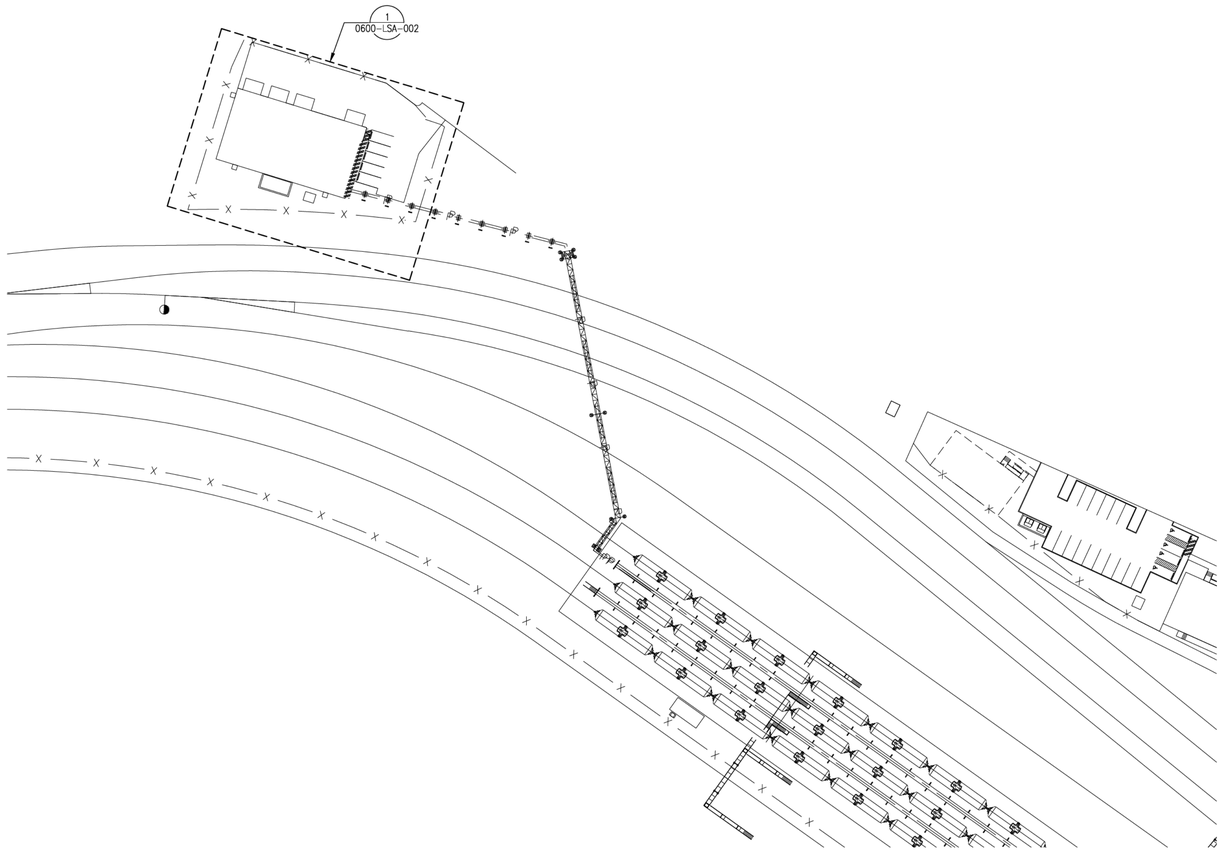

1 AREA 600 – LIFE SAFETY ANALYSIS SITE PLAN
SCALE: 1" = 60'

TRUE NORTH

0 60' 120'

PRELIMINARY, NOT FOR CONSTRUCTION

NO.	DATE	REVISION	BY	CK'D	APP

PRO3 DEFINITIVE DESIGN BUILD
PROCESS ▲ PROTECT ▲ PROCEED

POOLE FIRE PROTECTION

TESORO SAVAGE

THIS DRAWING CONTAINS PROPRIETARY AND PRIVILEGED INFORMATION OF TESORO SAVAGE PETROLEUM LLC AND SHALL NOT BE DISCLOSED OR USED FOR THE BENEFIT OF OTHERS WITHOUT PRIOR WRITTEN PERMISSION OF THE DRAWING OWNER.

CUSTOMER: TESORO SAVAGE PETROLEUM LLC

PROJECT: TESORO SAVAGE VANCOUVER ENERGY DISTRIBUTION TERMINAL
PORT OF VANCOUVER, WASHINGTON

DESCRIPTION: LIFE SAFETY ANALYSIS SHEET

DESIGN:	R. BENNETT	START DATE:	03-31-2014	SCALE:	AS NOTED
DRAWN:	D. FLAGOR	PRINT DATE:	07-14-2014	PROJECT MANAGER:	C. GLOTZBACH
CHECKED:	J. POOLE	APPROVED:	J. POOLE	SIZE:	24x36

DRAWING NUMBER	SHEET	REV.
0600-LSA-001	1/1	A

EX-0001-007553-PCE

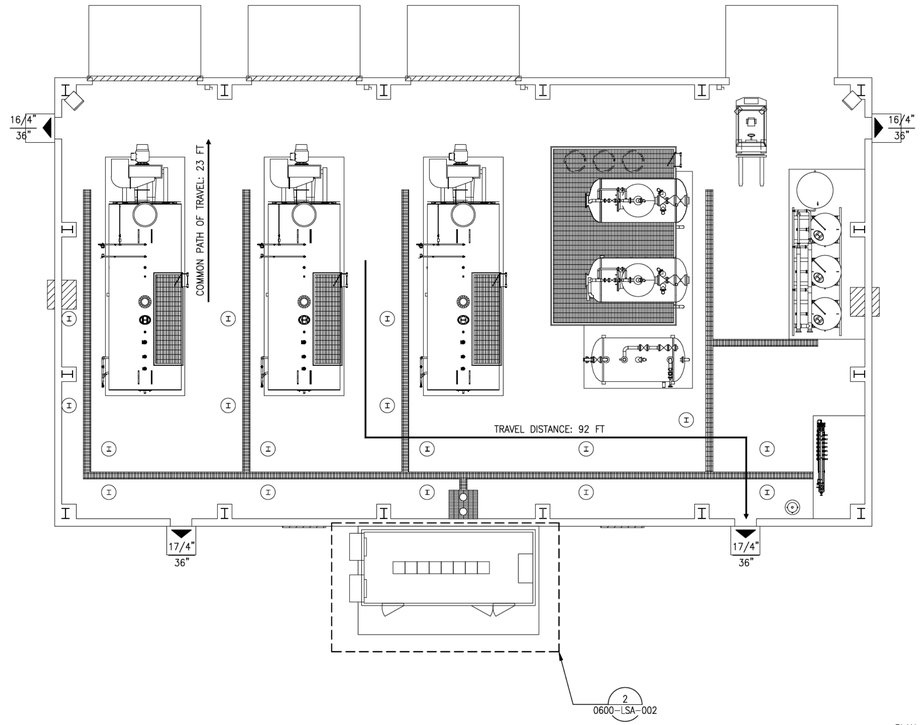

1 AREA 600 – LIFE SAFETY ANALYSIS BOILER HOUSE PLAN

SCALE: 1" = 10'

0 10' 20'

PLAN NORTH / TRUE NORTH

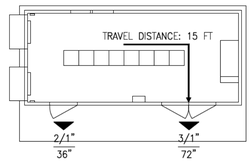

2 AREA 600 – LIFE SAFETY ANALYSIS E-HOUSE PLAN

SCALE: 1/8" = 1'-0"

0 4' 8' 16'

PLAN NORTH / TRUE NORTH

JOHN W. POOLE III
STATE OF WASHINGTON
34993
REGISTERED
PROFESSIONAL ENGINEER

PRELIMINARY, NOT FOR CONSTRUCTION

NO.	DATE	REVISION	BY	CK'D	APP

PRO3 DEFINITIVE DESIGN BUILD
PROCESS ▲ PROTECT ▲ PROCEED

POOLE FIRE PROTECTION

TESORO SAVAGE

THIS DRAWING CONTAINS PROPRIETARY AND PRIVILEGED INFORMATION OF TESORO SAVAGE PETROLEUM LLC AND SHALL NOT BE DISCLOSED OR USED FOR THE BENEFIT OF OTHERS WITHOUT PRIOR WRITTEN PERMISSION OF THE DRAWING OWNER.

CUSTOMER: TESORO SAVAGE PETROLEUM LLC

PROJECT: TESORO SAVAGE VANCOUVER ENERGY DISTRIBUTION TERMINAL
PORT OF VANCOUVER, WASHINGTON

DESCRIPTION: LIFE SAFETY ANALYSIS SHEET

DESIGN:	R. BENNETT	START DATE:	03-31-2014	SCALE:	AS NOTED
DRAWN:	D. FLAGOR	PRINT DATE:	07-14-2014	PROJECT MANAGER:	C. GLOTZBACH
CHECKED:	J. POOLE	APPROVED:	J. POOLE	SIZE:	24x36

DRAWING NUMBER	SHEET	REV.
0600-LSA-002	1/1	A

EX-0001-007554-PCE

GENERAL CONCRETE NOTES

1. MATERIALS, CONSTRUCTION, AND WORKMANSHIP SHALL CONFORM TO THE LATEST EDITIONS OF LOCAL BUILDING CODE REQUIREMENTS FOR REINFORCED CONCRETE, ACI BUILDING CODES (ACI 318 AND ACI 301) LATEST EDITION, AND PROJECT CONCRETE SPECIFICATIONS.

2. ALL REINFORCING STEEL SHALL BE DETAILED IN ACCORDANCE WITH THE MANUAL OF STANDARD PRACTICE FOR DETAILING REINFORCED CONCRETE (ACI 315).

3. ALL #4 AND LARGER REINFORCING BARS ARE TO BE SHOP FABRICATED, BUNDLED AND TAGGED WITH DRAWING NO. AND MARK NO. UNLESS OTHERWISE NOTED.

4. SPLICES SHALL CONFORM TO THE ACI BUILDING CODE (ACI 318). BARS SHALL BE CONTINUOUS THROUGH ALL PIERS AND AROUND CORNERS.
   UNLESS OTHERWISE NOTED, MINIMUM BAR SPLICES SHALL BE AS FOLLOWS:

LENGTH OF SPLICE

BAR SIZE	VERT. BAR W/ MIN 2½" COVER	ALL OTHER BARS W/ MIN.1½" COVER
#4	1'–6"	1'–11"
#5	1'–10"	2'–5"
#6	2'–2"	3'–6"
#7	3'–2"	5'–11"
#8	3'–7"	7'–9"
#9	4'–7"	9'–10"
#10	5'–9"	12'–6"
#11	7'–1"	15'–5"

   COVER IS THE CLEAR DISTANCE FROM BAR TO NEAREST EDGE OF CONCRETE.
   MINIMUM LAP FOR WELDED WIRE FABRIC SHALL BE ONE FULL MESH PLUS 2 INCHES.

5. ALL MATERIALS SHALL CONFORM TO THE FOLLOWING SPECIFICATIONS:
   A. CONCRETE AGGREGATE – ASTM C 33.
   B. REINFORCING BARS – ASTM A 615 GRADE 60.
   C. ANCHOR RODS – ASTM F1554 GR. 36.
   D. EMBEDDED STEEL PLATES AND ANGLES – ASTM A36.
   E. CEMENT – PORTLAND CEMENT ASTM C 150 TYPE II.
   F. GROUT 1" THICK OR OVER – 928 MASTERFLOW, 100 SPECIAL FIVE STAR, OR EQUAL.
   G. GROUT UNDER 1" THICK OR WHERE EPOXY GROUT IS REQUIRED – 648 CP PLUS MASTERFLOW EPOXY GROUT, OR EQUAL.

6. ALL CONCRETE SHALL BE AS FOLLOWS:
   A. MINIMUM COMPRESSIVE STRENGTH AT 28 DAYS – 3,000 PSI WITH THE FOLLOWING EXCEPTIONS
      1) FLATWORK NOT EXPOSED TO FREEZING AND THAWING IN A MOIST CONDITION SHALL HAVE A MINIMUM COMPRESSIVE STRENGTH AT 28 DAYS OF 4,000 PSI.
      2) ALL CONCRETE EXPOSED TO FREEZING AND THAWING IN A MOIST CONDITION SHALL HAVE A MINIMUM COMPRESSIVE STRENGTH AT 28 DAYS OF 5,000 PSI FOR DURABILITY PURPOSES.
   B. MAXIMUM SLUMP – 5 INCHES.
   C. MAXIMUM AGGREGATE SIZE – 1 INCH.

7. PROVIDE CONCRETE PROTECTION FOR REINFORCEMENT AS FOLLOWS:
   A. CONCRETE DEPOSITED DIRECTLY AGAINST GROUND – 3" CLEAR.
   B. FORMED CONCRETE EXPOSED TO WEATHER OR GROUND AFTER REMOVAL OF FORMS – 2" CLEAR.
   C. FORMED CONCRETE NOT EXPOSED TO WEATHER OR GROUND AFTER REMOVAL OF FORMS – 1–1/2" CLEAR FOR COLUMNS, BEAMS, AND GIRDERS; 3/4" CLEAR FOR SLABS AND WALLS.

8. PROVIDE FORMED KEYWAYS AT ALL CONSTRUCTION JOINTS UNLESS OTHERWISE NOTED. KEYWAY SHALL BE 1–1/2" DEEP BY 1/3 THE THICKNESS OF THE MEMBER UNLESS OTHERWISE NOTED. CONSTRUCTION JOINTS OTHER THAN THOSE SPECIFIED ON DRAWINGS SHALL OCCUR ONLY WHERE APPROVED BY ENGINEER.

9. CONCRETE FINISHING OTHER THAN FLOOR AND ROOF SLABS SHALL HAVE A SMOOTH FINISH. FLOOR AND ROOF SLABS SHALL HAVE A NONSLIP FINISH (BROOMED). ALL EXPOSED PEDESTALS AND WALLS SHALL BE OF SUFFICIENT FINISH TO REMOVE ALL HONEYCOMBS AND FORM MARKS.

10. ALL EXPOSED CORNERS ABOVE GRADE SHALL HAVE A 3/4" BY 45 DEGREE CHAMFER UNLESS OTHERWISE NOTED.

11. ALL CONCRETE WORK PERFORMED IN HOT, DRY, OR WINDY WEATHER SHALL BE IN ACCORDANCE WITH ACI STANDARD 305 LATEST EDITION. FOR A DEFINITION OF HOT, DRY, OR WINDY WEATHER, SEE ACI 305 FIG. 2.1.5.

12. ALL CONCRETE WORK PERFORMED IN COLD WEATHER SHALL BE IN ACCORDANCE WITH ACI STANDARD 306 LATEST EDITION. COLD WEATHER IS DEFINED IN ACI 306 AS A PERIOD WHEN, FOR MORE THAN 3 CONSECUTIVE DAYS, THE FOLLOWING CONDITIONS EXIST:
   A. THE AVERAGE DAILY AIR TEMPERATURE IS LESS THAN 40 F, AND
   B. THE AIR TEMPERATURE IS NOT GREATER THAN 50 F FOR MORE THAN ONE–HALF OF ANY 24–HR PERIOD.
   THE AVERAGE DAILY AIR TEMPERATURE IS THE AVERAGE OF THE HIGHEST AND THE LOWEST TEMPERATURES OCCURRING DURING THE PERIOD FROM MIDNIGHT TO MIDNIGHT.

13. A MINIMUM OF 6 INCHES OF COMPACTED BASE MATERIAL SHALL BE PLACED BENEATH ALL FOOTINGS, MATS, AND SLABS ON GRADE. THE SUB–BASE MATERIAL SHALL BE A WELL GRADED MAX. 3/4" MATERIAL.

14. ALL FILL AND BACKFILL SHALL BE PLACED IN 8" MAX. UNCOMPACTED LIFTS AND COMPACTED TO THE FOLLOWING MINIMUM DRY DENSITIES PER ASTM D 1557 (MODIFIED PROCTOR):
   A. BELOW FOOTINGS – 95%
   B. BELOW SLABS – 90%
   C. BACKFILL FOR FOUNDATION WALLS AND BELOW GRADE WALLS – 90%

15. ALL FLATWORK SHALL BE AIR ENTRAINED 6% ± 1%.

16. CONTRACTOR SHALL TAKE CONCRETE CYLINDERS FOR BREAKING AT 7 DAYS AND 28 DAYS BASED ON THE FREQUENCY AS FOLLOWS:
   (3) CYLINDERS PER DAY OR NOT LESS THAN (3) FOR EACH 150 CUBIC YARDS OF CONCRETE PLACED OR NOT LESS THAN (3) FOR EACH 5,000 SQUARE FEET OF AREA FOR WALLS OR SLABS. SEE IBC 1905.6. BREAK ONE AT 7 DAYS AND ONE AT 28 DAYS AND HAVE ONE SPARE FOR EACH SAMPLE.

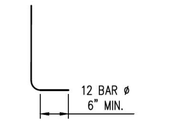

STANDARD 90° HOOK
NTS

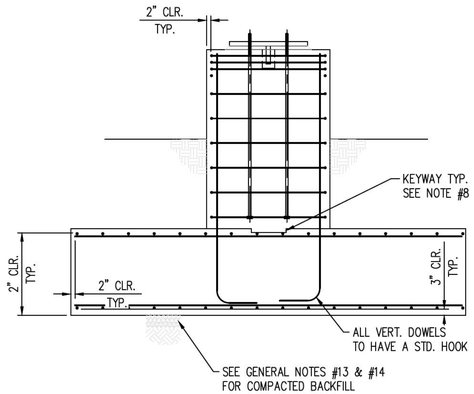

GENERAL NOTES FOR ALL FOOTINGS
NTS

TYPE 1
(HEADED ANCHOR ROD)

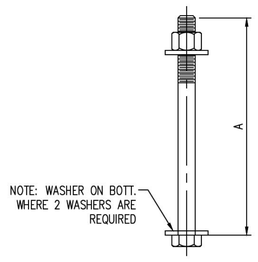

TYPE 2
(THREADED ROD WITH NUT)

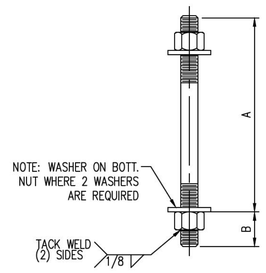

NOTES:

1. ANCHOR RODS SHALL BE ASTM F1554 GR. 36. RODS SHALL HAVE STANDARD NUMBER OF UNC (COARSE) THREADS PER INCH, CLASS 2 FIT, AND HEAVY HEX NUTS.
2. TYPE 1 ANCHORS MAY BE REPLACED WITH TYPE 2 ANCHORS OF ASTM A36 ROD WITH MATCHING "A" DIMENSIONS AND "B" DIMENSIONS ADEQUATE TO ACCOMMODATE HEAVY HEX NUTS AND TACK WELDS.
3. ALL THREAD LENGTHS ARE MINIMUMS. LONGER THREAD LENGTHS ARE PERMITTED INCLUDING THE USE OF ALL THREAD ROD.
4. TAG ALL ANCHOR RODS WITH MARK NUMBER.
5. WASHERS SHALL BE FABRICATED FROM ASTM A36 PLATE WITH A HOLE 1/16" LARGER THAN THE ANCHOR ROD DIAMETER. WASHERS MAY BE ROUND, SQUARE, OR RECTANGULAR WITH MINIMUM OUTSIDE DIMENSION AND THICKNESS AS SHOWN BELOW.

ANCHOR ROD SCHEDULE

MARK NO.	NO. REQ'D	SIZE	TYPE	TOTAL LENGTH	A	B	THREAD LENGTH TOP	THREAD LENGTH BOTTOM	# OF NUTS PER ANCHOR TOP	# OF NUTS PER ANCHOR BOTTOM	WASHERS # PER ANCHOR	WASHERS THICKNESS	WASHERS SIZE (MIN. O.D.)	REF. DWG.	REMARKS	MADE BY	CHK'D BY
MK–PS–AR1	1500	1"	1	2'–0"	2'–0"	–	12"	–	1	–	1	7/8"	5½"		PIPE SUPPORT ANCHOR RODS	MRD	
MK–PS–AR2	700	1¼"	1	2'–0"	2'–0"	–	12"	–	1	–	1	7/8"	5½"		PIPE SUPPORT ANCHOR RODS	MRD	
MK–PS–AR3	144	1"	1	7'–5"	7'–5"	–	10"	–	1	–	1	7/8"	5½"		PIPE SUPPORT ANCHOR RODS	MRD	
MK–PS–AR4	80	1¼"	1	7'–5"	7'–5"	–	10"	–	1	–	1	7/8"	5½"		PIPE SUPPORT ANCHOR RODS	MRD	
MK–CT–AR9	120	¾"	2	1'–4"	POST INSTALLED ADHESIVE ANCHORS MIN. 12" EMBEDMENT									0300–SD–013	PUMP PIT PIPE SUPPORT BENTS	PDM	
MK–SB–AR10	1332	1½"	1	3'–5"	3'–5"	–	5"	–	1	–	1	1/2"	3"	0100–FD–005	RAIL BUILDING FOUNDATION	MWD	
MK–SB–AR11	96	1¼"	1	3'–5"	3'–5"	–	5"	–	1	–	1	1/2"	3"	0100–FD–005	WEST BOILER FOUNDATION	MWD	
MK–SB–AR12	48	1¼"	1	3'–5"	3'–5"	–	5"	–	1	–	1	1/2"	3"	0100–FD–005	STORAGE BUILDING FOUNDATION	MWD	
MK–PS–AR13	56	2"	1	3'–6"	3'–6"	–	6"	–	1	–	1	5/16"	4"	0500–FD–026	AREA 500 TRANSFER PIPELINE BRIDGE #1	MWD	
MK–PS–AR14	8	1¼"	1	3'–5"	3'–5"	–	5"	–	1	–	1	5/16"	3"	0500–FD–026	AREA 500 TRANSFER PIPELINE BRIDGE #2	MWD	
MK–PS–AR15	24	1¼"	1	4'–11"	4'–11"	–	5"	–	1	–	1	5/16"	3"	0500–FD–026	AREA 500 TRANSFER PIPELINE BRIDGE #3	MWD	
MK–PS–AR16	24	1½"	1	3'–5"	3'–5"	–	5"	–	1	–	1	5/16"	3"	0400–FD–026	AREA 400 TRANSFER PIPELINE BRIDGE #4	MWD	
MK–PS–AR17	72	2¼"	1	4'–8"	4'–8"	–	6"	–	1	–	2	5/16"	4"	0600–FD–026	AREA 600 TRANSFER STEAM BRIDGE #1 & 2	MWD	
MK–PS–AR18	56	2"	1	4'–2"	4'–2"	–	6"	–	1	–	2	5/16"	4"	0500–FD–032	ELEVATED PIPE SUPPORTS	MWD	

** ANCHORS ASSOCIATED WITH EMBED PLATES ARE NOT INCLUDED IN THIS TABLE

NO.	DATE	REVISION	BY	CK'D	APP
–	–	–	–	–	–
HH	11/14/14		NLB	–	–

R&M ENGINEERING CONSULTANTS
SALT LAKE CITY, UTAH
(801)263–3419
13014

TESORO SAVAGE

THIS DRAWING CONTAINS PROPRIETARY AND PRIVILEGED INFORMATION OF TESORO SAVAGE PETROLEUM LLC AND SHALL NOT BE DISCLOSED OR USED FOR THE BENEFIT OF OTHERS WITHOUT PRIOR WRITTEN PERMISSION OF THE DRAWING OWNER.

CUSTOMER: TESORO SAVAGE PETROLEUM TERMINAL LLC

PROJECT: TESORO SAVAGE VANCOUVER ENERGY DISTRIBUTION TERMINAL LLC
PORT OF VANCOUVER, WASHINGTON

DESCRIPTION: GENERAL CONCRETE NOTES AND ANCHOR ROD SCHEDULE

DESIGN:	START DATE: 09–05–13	SCALE:	NONE
DRAWN: MRD	PRINT DATE:	PROJECT MANAGER:	DC
CHECKED:	APPROVED:	SIZE:	24x36
DRAWING NUMBER: 0100–FD–001		SHEET: 1/2	REV.: HH

Footing Schedule Area 0100

EX-0001-007555-PCE

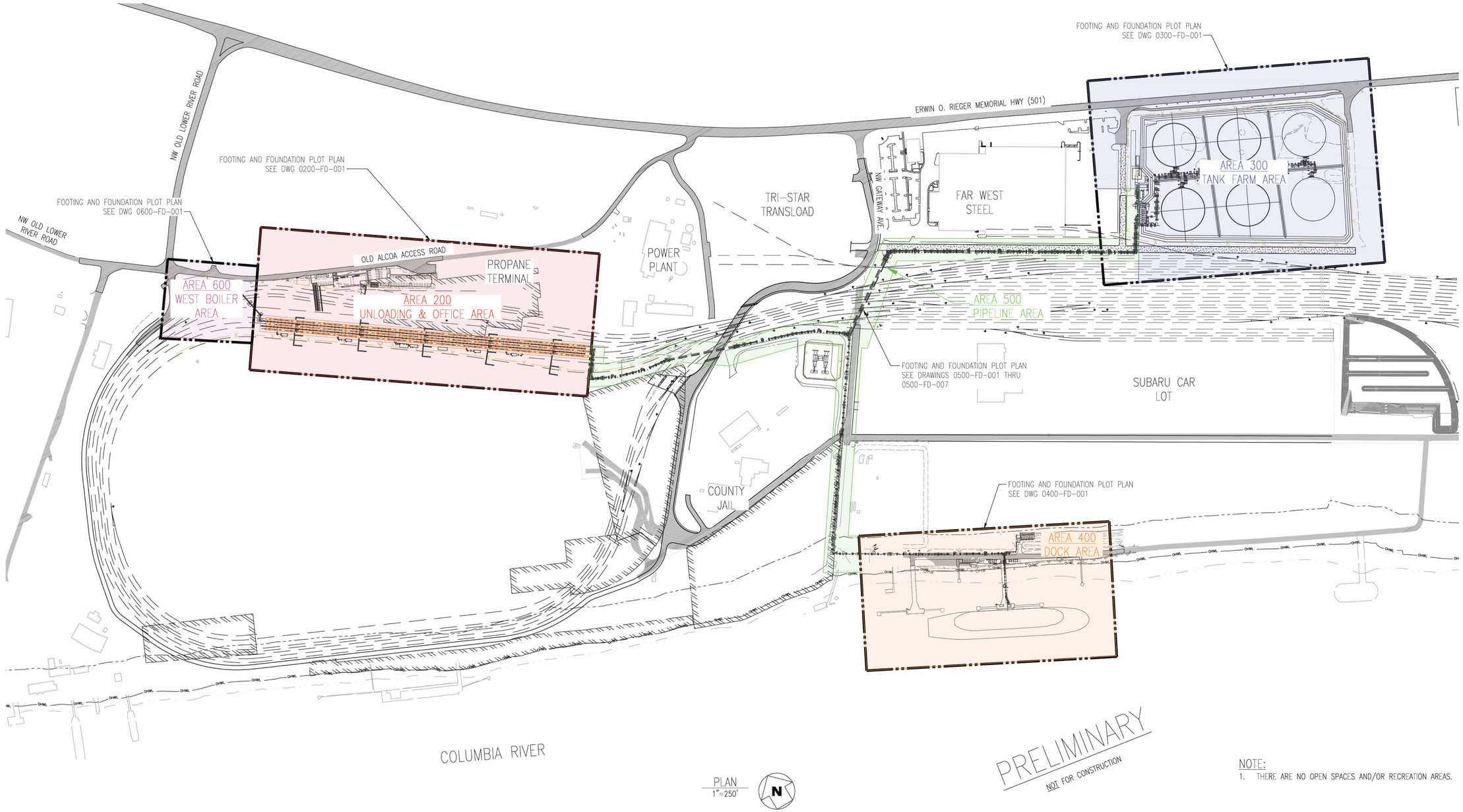

PLAN
1"=250'

PRELIMINARY
NOT FOR CONSTRUCTION

NOTE:
1. THERE ARE NO OPEN SPACES AND/OR RECREATION AREAS.

NO.	DATE	REVISION	BY	CK'D	APP
–	–	–	–	–	–
HH	11-14-14		NLB	–	–

13014 FOUNDATION PLOT PLAN 11-12-14

R&M ENGINEERING CONSULTANTS
SALT LAKE CITY, UTAH
(801)263-3419

13014

TESORO SAVAGE

THIS DRAWING CONTAINS PROPRIETARY AND PRIVILEGED INFORMATION OF TESORO SAVAGE PETROLEUM LLC AND SHALL NOT BE DISCLOSED OR USED FOR THE BENEFIT OF OTHERS WITHOUT PRIOR WRITTEN PERMISSION OF THE DRAWING OWNER.

CUSTOMER: TESORO SAVAGE PETROLEUM TERMINAL LLC

PROJECT: TESORO SAVAGE VANCOUVER ENERGY DISTRIBUTION TERMINAL LLC
PORT OF VANCOUVER, WASHINGTON

DESCRIPTION: FOOTING & FOUNDATION OVERALL PLOT PLAN

DESIGN:		START DATE: 07-31-13		SCALE:	1"=250'
DRAWN:	PDM	PRINT DATE:		PROJECT MANAGER:	DC
CHECKED:		APPROVED:		SIZE:	24x36
DRAWING NUMBER				SHEET	REV.
0100-FD-001				2/2	HH

EX-0001-007556-PCE

BASE PLATE SCHEDULE

BASE PLATE MK. NO.	QTY	BASE PLATE TYPE	BASE PLATE DIMENSIONS			ANCHOR ROD HOLE DIMENSIONS							SHEAR LUG DIMENSIONS				MADE BY	CHK'D BY
			A	B	C	D	E	F	G	H	J	K	L	M	N	WELD SIZE P		
MK-PS-BP1																		
MK-PS-BP2	300	1	1'-6"	2'-11"	1"	8"	5"	1 1/2"	2'-8"	-	1 1/2"	1 1/8"	-	-	-	-	PDM	MRD
MK-PS-BP3	33	1	1'-6"	3'-11"	1"	8"	5"	1 1/2"	3'-8"	-	1 1/2"	1 3/8"	-	-	-	-	PDM	MRD
MK-PS-BP4	94	2	1'-6"	5'-11"	1"	8"	5"	1 1/2"	3'-8"	2'-0"	1 1/2"	1 3/8"	-	-	-	-	PDM	MRD
MK-PS-BP5	6	1	2'-0"	2'-11"	2"	1'-6"	3"	1 1/2"	2'-8"	-	1 1/2"	1 1/8"	9"	1'-4"	2"	5/8"	PDM	MRD
MK-PS-BP6	6	1	3'-2"	3'-11"	2"	1'-6"	10"	1 1/2"	3'-8"	-	1 1/2"	1 3/8"	9"	2'-0"	2"	5/8"	PDM	MRD
MK-PS-BP7	10	3	3'-2"	5'-11"	2"	1'-6"	10"	1 1/2"	3'-8"	2'-0"	1 1/2"	1 3/8"	9"	2'-0"	2"	5/8"	PDM	MRD
MK-PS-BP8	24	1	2'-0"	2'-11"	2"	1'-6"	3"	1 1/2"	2'-8"	-	1 1/2"	1 1/8"	9"	1'-4"	2"	5/8"	PDM	MRD
MK-PS-BP9	49	2	1'-6"	5'-7"	1"	8"	5"	1 1/2"	2'-8"	2'-8"	1 1/2"	1 1/8"	-	-	-	-	PDM	MRD
MK-PS-BP10	1	2	1'-6"	4'-3"	1"	8"	5"	1 1/2"	1'-4"	2'-8"	1 1/2"	1 1/8"	-	-	-	-	PDM	MRD
MK-PS-BP11																		
MK-PS-BP12	4	2	2'-0"	5'-7"	2"	1'-6"	3"	1 1/2"	2'-8"	2'-8"	1 1/2"	1 1/8"	9"	1'-4"	2"	5/8"	PDM	MRD
MK-PS-BP13																		

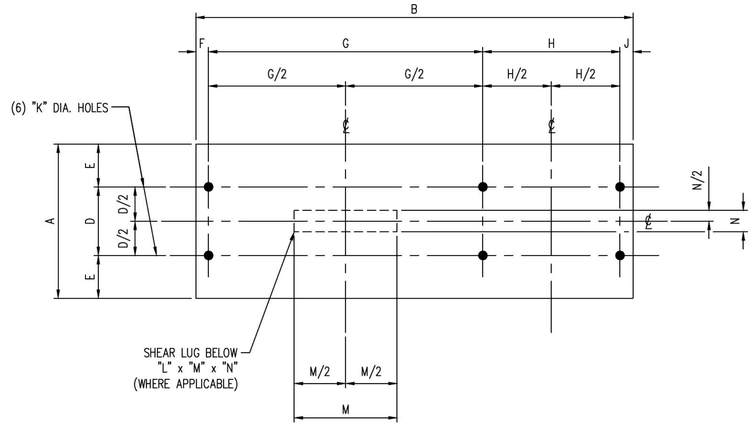

BASE PLATE TYPE 3
(FOR ORIENTATION SEE PLAN)

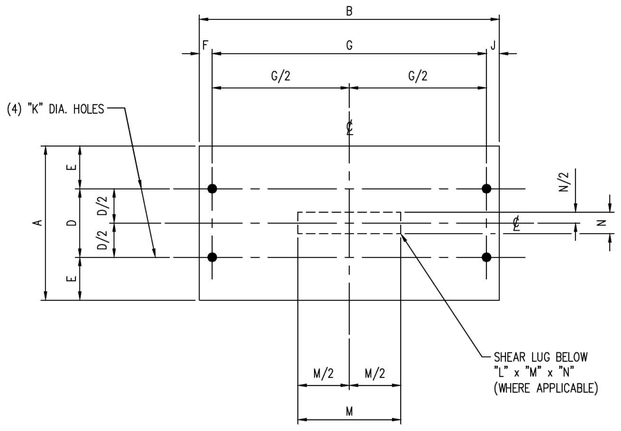

BASE PLATE TYPE 1
(FOR ORIENTATION SEE PLAN)

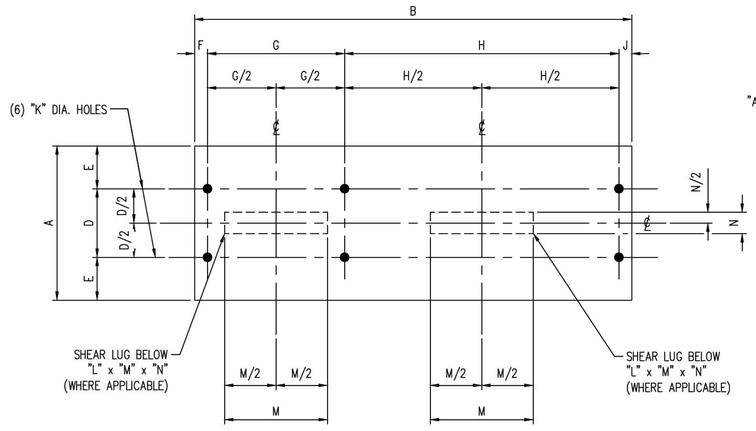

BASE PLATE TYPE 2
(FOR ORIENTATION SEE PLAN)

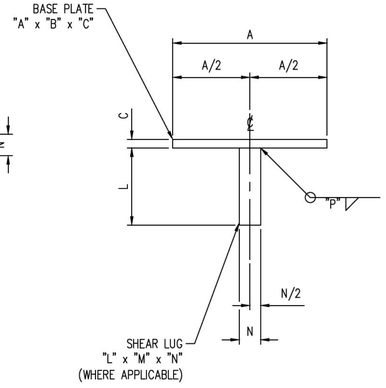

TYP. SHER LUG
(FOR ORIENTATION SEE PLAN)

PRELIMINARY
NOT FOR CONSTRUCTION

NOTES:

1. FOR CONCRETE GENERAL NOTES SEE DWG 0100-FD-001.
2. TOLERANCE ON ELEVATION OF TOPS OF EMBEDDED PLATES ARE $\pm\frac{1}{8}$"
3. FOR ANCHOR ROD SCHEDULE SEE DWG 0100-FD-001.
4. ALL DOWELS TO HAVE STD. 90° HOOKS IN FTG PER ACI 318 LATEST EDITION.
5. ALL CLEARANCES 2" MIN. U.N.O.
6. PIPE SADDLE BASE PLATES TO BE PROVIDED BY CONCRETE CONTRACTOR.
7. ALL REBAR DIMENSIONS ARE TO OUTSIDE OF REBAR U.N.O.

Footing Schedule Area 0100

NO.	DATE	REVISION	BY	CK'D	APP
–	–	–	–	–	–
HH	11/14/14		NLB	–	–

R&M ENGINEERING CONSULTANTS
SALT LAKE CITY, UTAH
(801)263-3419
13014

TESORO SAVAGE

THIS DRAWING CONTAINS PROPRIETARY AND PRIVILEGED INFORMATION OF TESORO SAVAGE PETROLEUM LLC AND SHALL NOT BE DISCLOSED OR USED FOR THE BENEFIT OF OTHERS WITHOUT PRIOR WRITTEN PERMISSION OF THE DRAWING OWNER.

CUSTOMER: TESORO SAVAGE PETROLEUM TERMINAL LLC

PROJECT: TESORO SAVAGE VANCOUVER ENERGY DISTRIBUTION TERMINAL LLC
PORT OF VANCOUVER, WASHINGTON

DESCRIPTION: PIPE SUPPORT FOOTING BASE PLATE SCHEDULE
BASE PLATE DETAILS

DESIGN:		START DATE: 09-05-13	SCALE: NONE
DRAWN: MRD		PRINT DATE:	PROJECT MANAGER: DC
CHECKED:		APPROVED:	SIZE: 24x36
DRAWING NUMBER			SHEET / REV.
0100-FD-002			1/1 HH

EX-0001-007557-PCE

Premanufactured Building - PB - Footing Schedule

Ftg. Mk.	Ftg. Type	Pier Type	QTY.	Remarks	DWG #	Concrete Horizontal Dimensions								Concrete Vertical Dimensions				Elevations		Anchor Rods			Reinforcement Bars					Made By	Chk'D By
						A	B	C	D	E	F	G	H	J	K	L	M	R	S	Qty	Dia	W	XP1 - Corner Bundles	XP2 - Tie Set	XP3 - Corner Bar	XP4 - Stem Wall	XF1		
MK-PB-0200-F1	A	1	4	Unloading Bldg	0200-FD-001	14'-0"	14'-0"	-	1'-0"	2'-0"	3'-0"	5'-6"	6'-0"	6"	3'-0"	2'-0"	6"	32'-4"	26'-10"	6			(16) #5 Bars	#5 Tie Sets	#5 Bars	#5 Bars	#6 @ 12"	MWD	
MK-PB-0200-F2	B	2	182	Unloading Bldg	0200-FD-001	14'-0"	14'-0"	-	1'-0"	2'-0"	3'-0"	5'-6"	6'-0"	6"	3'-0"	2'-0"	6"	32'-4"	26'-10"	6	MK-SB-AR10		(16) #5 Bars	#5 Tie Sets	N/A	#5 Bars	#6 @ 12"	MWD	
MK-PB-0200-F3	C	3	18	Unloading Bldg	0200-FD-001	14'-0"	14'-0"	-	1'-0"	4'-0"	3'-0"	5'-6"	6'-0"	6"	3'-0"	2'-0"	6"	32'-4"	26'-10"	12			(16) #5 Bars	#5 Tie Sets	N/A	#5 Bars	#6 @ 12"	MWD	
MK-PB-0300-F1	A	1	4	Storage Bldg	0300-FD-003	12'-6"	12'-6"	0'-8"	0'-8"	2'-0"	3'-0"	4'-9"	5'-3"	1'-6"	2'-0"	2'-0"	12"	33'-3"	27'-9"	6	MK-SB-AR11		(16) #5 Bars	#5 Tie Sets	#5 Bars	#5 Bars	#6 @ 12"	PDM	
MK-PB-0300-F2	B	2	4	Storage Bldg	0300-FD-003	12'-6"	12'-6"	-	0'-8"	2'-0"	3'-0"	4'-9"	5'-3"	1'-6"	2'-0"	2'-0"	12"	33'-3"	27'-9"	6			(16) #5 Bars	#5 Tie Sets	N/A	#5 Bars	#6 @ 12"	PDM	
MK-PB-0600-F1	A	1	4	West Boiler	0600-FD-002	12'-6"	12'-6"	0'-8"	0'-8"	2'-0"	3'-0"	4'-9"	5'-3"	1'-6"	2'-0"	2'-0"	12"	31'-8"	26'-2"	6	MK-SB-AR12		(16) #5 Bars	#5 Tie Sets	#5 Bars	#5 Bars	#6 @ 12"	PDM	
MK-PB-0600-F2	B	2	12	West Boiler	0600-FD-002	12'-6"	12'-6"	-	0'-8"	2'-0"	3'-0"	4'-9"	5'-3"	1'-6"	2'-0"	2'-0"	12"	31'-8"	26'-2"	6			(16) #5 Bars	#5 Tie Sets	N/A	#5 Bars	#6 @ 12"	PDM	

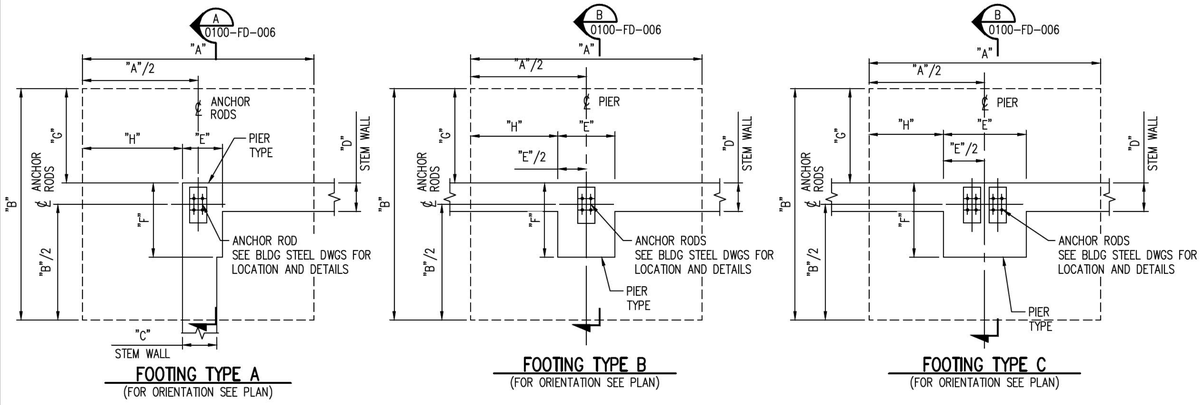

FOOTING TYPE A
(FOR ORIENTATION SEE PLAN)

FOOTING TYPE B
(FOR ORIENTATION SEE PLAN)

FOOTING TYPE C
(FOR ORIENTATION SEE PLAN)

PRELIMINARY
NOT FOR CONSTRUCTION

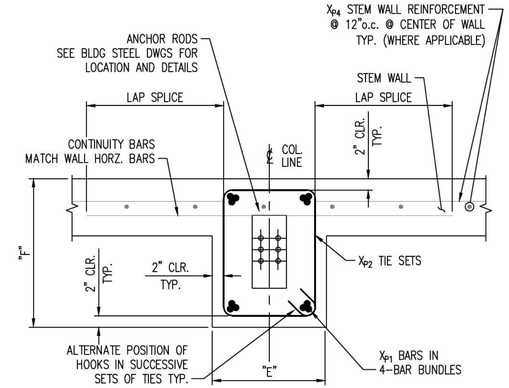

PIER – TYPE 2

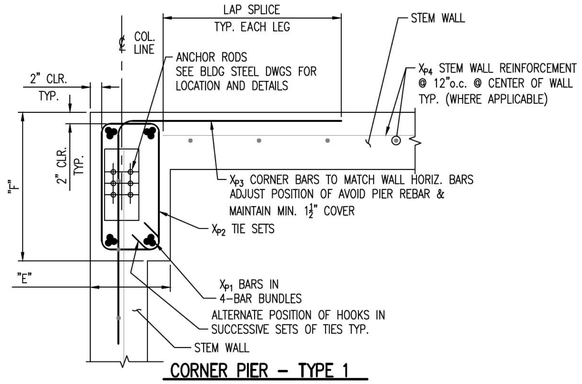

CORNER PIER – TYPE 1

NOTE: ADJUST POSITION OF WALL HORIZ. BARS TO AVOID PIER REBAR & MAINTAIN MIN. 1½" COVER

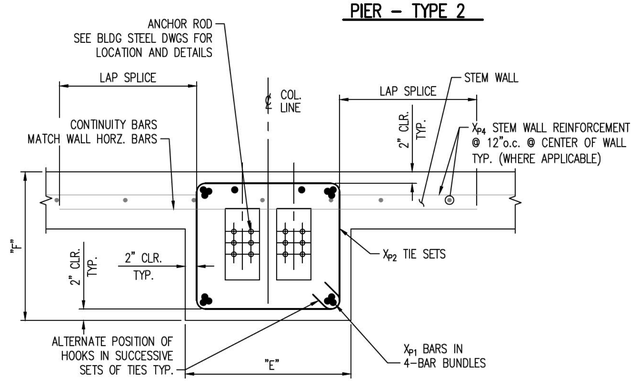

PIER – TYPE 3

NOTES:

1. FOR CONCRETE GENERAL NOTES SEE DWG 0100-FD-001.
2. FOR ANCHOR ROD LOCATIONS SEE STEEL BLDG DWG. BY _____.
3. FOR ANCHOR ROD SCHEDULE SEE DWG 0100-FD-001.

NO.	DATE	REVISION	BY	CK'D	APP
–	–	–	–	–	–
HH	11/14/14		NLB	–	–

R&M ENGINEERING CONSULTANTS
SALT LAKE CITY, UTAH
(801)263-3419
13014

TESORO SAVAGE

THIS DRAWING CONTAINS PROPRIETARY AND PRIVILEGED INFORMATION OF TESORO SAVAGE PETROLEUM LLC AND SHALL NOT BE DISCLOSED OR USED FOR THE BENEFIT OF OTHERS WITHOUT PRIOR WRITTEN PERMISSION OF THE DRAWING OWNER.

CUSTOMER: TESORO SAVAGE PETROLEUM TERMINAL LLC

PROJECT: TESORO SAVAGE VANCOUVER ENERGY DISTRIBUTION TERMINAL LLC
PORT OF VANCOUVER, WASHINGTON

DESCRIPTION: PREMANUFACTURED BUILDING FOUNDATION SCHEDULE

DESIGN:		START DATE:	08-02-13	SCALE:	NTS
DRAWN:	JBH	PRINT DATE:	10-02-14	PROJECT MANAGER:	DC
CHECKED:		APPROVED:		SIZE:	24x36
DRAWING NUMBER				SHEET	REV.
0100-FD-005				1/1	HH

Footing Schedule Area 0100

EX-0001-007558-PCE

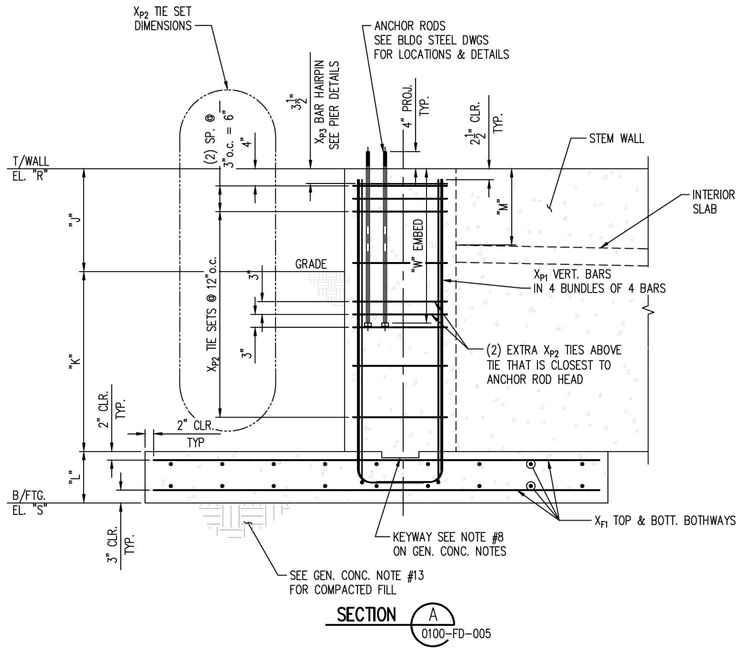

SECTION A 0100-FD-005

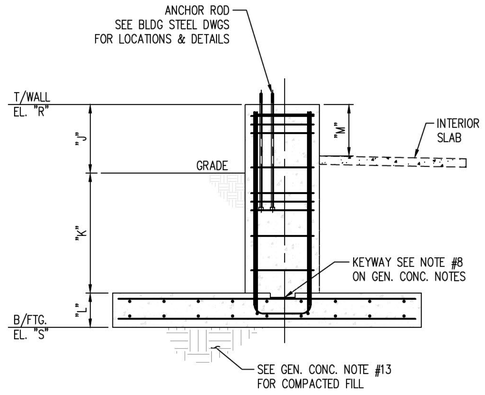

SECTION B 0100-FD-005

NOTE: SEE SECTION A FOR REBAR & ANCHOR ROD DETAILS

PRELIMINARY
NOT FOR CONSTRUCTION

Footing Schedule Area 0100

NO.	DATE	REVISION	BY	CK'D	APP
–	–	–	–	–	–
HH	11/14/14		NLB	–	–

R&M ENGINEERING CONSULTANTS
SALT LAKE CITY, UTAH
(801)263-3419

13014

TESORO SAVAGE

THIS DRAWING CONTAINS PROPRIETARY AND PRIVILEGED INFORMATION OF TESORO SAVAGE PETROLEUM LLC AND SHALL NOT BE DISCLOSED OR USED FOR THE BENEFIT OF OTHERS WITHOUT PRIOR WRITTEN PERMISSION OF THE DRAWING OWNER.

CUSTOMER: TESORO SAVAGE PETROLEUM TERMINAL LLC

PROJECT: TESORO SAVAGE VANCOUVER ENERGY DISTRIBUTION TERMINAL LLC
PORT OF VANCOUVER, WASHINGTON

DESCRIPTION:
PREMANUFACTURED BUILDING
FND SCHEDULE ELEVATION VIEWS

DESIGN:		START DATE:	08-02-13	SCALE:	NTS
DRAWN:	JBH	PRINT DATE:		PROJECT MANAGER:	DC
CHECKED:		APPROVED:		SIZE:	24x36

DRAWING NUMBER	SHEET	REV.
0100-FD-006	1/1	HH

EX-0001-007559-PCE

Thickened Slab - TS - Footing Schedule

Ftg. Mk.	Remarks	Qty	DWG #	Cross-Seciton A or B	Concrete Horizontal Dimensions													Concrete Vertical Dimensions					Elev.	Studs			Rebar	Made By	Chk'D By
					A	B	C1	C2	D	E	F	G	H	J	K	N	P	R	S	T	U	V	W	M	Z	L	X_{S1}		
MK-TS-0200-F2	Area 0200 E-House #1,2,& 4	3	0200-FD-001	A	34'-8"	13'-4"	1'-0"	1'-0"	2	13'-2"	26'-4"	11'-4"	8"	4"	3/4 "	27'-0"	12'-0"	2'-0"	6"	4'-0"	14"	10"	32'-6"	3/4"		8"	#5 @ 12"o.c.	JBH	
MK-TS-0200-F3	Area 0200 E-House #5	1	0200-FD-001	A	28'-4"	13'-4"	1'-0"	1'-0"	2	13'-2"	26'-4"	11'-4"	8"	4"	3/4 "	27'-0"	12'-0"	2'-0"	6"	12"	14"	10"	32'-6"	3/4"		8"	#5 @ 12"o.c.	JBH	
MK-TS-0200-F4	Area 0200 Switch Gear	1	0200-FD-003	B	46'-6"	21'-0"	See MK-TS-0200-F4 Plan This DWG						16"	10"	1"	-	-	3'-6"	6"	3'-6"	1'-6"	2'-0"	32'-6"	1 3/4"	5/16"	3'-0"	#5 @ 12"o.c.	NMJ	
MK-TS-0200-F5	Area 0200 E-House #3B	1	0200-FD-003	A	45'-3"	13'-4"	1'-0"	1'-0"	2	18'-5"	36'-10"	11'-4"	8"	4"	3/4 "	37'-6"	12'-0"	2'-0"	6"	12"	14"	10"	32'-6"	3/4"		8"	#5 @ 12"o.c.	JBH	
MK-TS-0200-F8	Area 0200 Fire Pump & Foam Bldg	1	0200-FD-004	A	51'-4"	16'-4"	1'-0"	1'-0"	2	24'-8"	49'-4"	14'-4"	8"	4"	3/4 "	50'-0"	15'-0"	2'-0"	6"	12"	14"	10"	32'-6"	3/4"		8"	#5 @ 12"o.c.	JBH	
MK-TS-0200-F10	Area 0200 Air Compressor Pad	1	0200-FD-003	B	25'-10"	12'-6"	Hold for Final Cut Sheet											1'-6"	6"	-	-	-	32'-6"	-		-	#5 @ 12"o.c.	JBH	
MK-TS-0200-F11	Area 0200 Spill Comtainment Tank #1	1	0200-FD-007	B	45'-0"	12'-0"	8'-2"	1'-8"	-	-	28'-8"	8'-8"	1'-4"	1'-4"	3/4 "	-	-	2'-0"	6"	-	-	-	35'-3"	3/4"	-	10"	#5 @ 12"o.c.	JBH	
MK-TS-0200-F12	Area 0200 Spill Comtainment Tank #2	1	0200-FD-007	A	45'-0"	12'-0"	8'-2"	1'-8"	-	-	28'-8"	8'-8"	1'-4"	1'-4"	3/4 "	-	-	4'-0"	6" MIN.	12"	2'-0"	2'-0"	35'-3"	3/4"	-	10"	#5 @ 12"o.c.	JBH	
MK-TS-0200-F13	Area 0200 Cable Tray Support by S.G.	1	0200-FD-003	B	24'-0"	6'-2"	See MK-TS-0200-F13 Plan This DWG						16"	10"	1"	-	-	3'-6"	6"	3'-6"	1'-6"	2'-0"	32'-6"	1 3/4"	5/16"	3'-0"	#5 @ 12"o.c.	JBH	
MK-TS-0300-F1	Area 0300 Fire Pump & Foam Bldg	1	0300-FD-002	A	51'-4"	16'-4"	1'-0"	1'-0"	2	24'-8"	49'-4"	14'-4"	8"	4"	3/4 "	50'-0"	15'-0"	2'-0"	6"	12"	14"	10"	31'-0"	3/4"		8"	#5 @ 12"o.c.	JBH	
MK-TS-0300-F2	Area 0300 Air Compressor Bldg	1	0300-FD-002	A	21'-4"	11'-4"	-	-	-	-	-	-	-	-	-	-	-	2'-0"	6"	12"	14"	10"	32'-3"	-	-	-	#5 @ 12"o.c.	JBH	
MK-TS-0300-F3	Area 0300 Switch Gear	1	0300-FD-002	B	47'-0"	12'-8"	Hold for Final Cut Sheet											1'-6"	6"	12"	8"	10"	30'-6"	5/8"	-	8"	#5 @ 12"o.c.	PDM	
MK-TS-0300-F4A	Area 0300 E-House #1	1	0300-FD-002	A	41'-4"	15'-4"	1'-0"	1'-0"	3	13'-1"	39'-4"	23'-4"	8"	4"	3/4 "	40'-0"	24'-0"	2'-0"	6"	12"	14"	10"	32'-0"	3/4"		8"	#5 @ 12"o.c.	JBH	
MK-TS-0300-F4B	Area 0300 E-House #2	1		A																			30'-6"						
MK-TS-0300-F5	Area Stair Support Pad	1	0300-FD-002	B	4'-0"	4'-0"	-	-	-	-	-	-	-	-	-	-	-	1'-6"	0'-9"	-	-	-	27'-6"	-		-	#5 @ 12"o.c.	JBH	
MK-TS-0300-F6	Area Stair Column Support Pad	1	0300-FD-002	B	2'-0"	4'-0"	-	-	-	-	-	-	-	-	-	-	-	1'-6"	0'-9"	-	-	-	27'-6"	-		-	#5 @ 12"o.c.	JBH	
MK-TS-0400-F1	Area 0400 MVCU Pad	1	0400-FD-001	B	35'-0"	77'-0"	Hold for Final Cut Sheet											1'-6"	0'-6"	-	-	-	31'-0"	-	-	-	#5 @ 12"o.c.	JBH	
MK-TS-0400-F2	Area 0400 MVCU Blower Pad	1	0400-FD-001	B	25'-0"	10'-6"	Hold for Final Cut Sheet											1'-6"	0'-9"	-	-	-	31'-0"	-		-	#5 @ 12"o.c.	JBH	
MK-TS-0600-F1	Area 0600 E-House	1	0600-FD-001	A	28'-4"	13'-4"	1'-0"	1'-0"	2	13'-2"	26'-4"	11'-4"	8"	4"	3/4 "	27'-0"	12'-0"	2'-0"	6"	12"	14"	10"	30'-8"	3/4"		8"	#5 @ 12"o.c.	JBH	

PRELIMINARY
NOT FOR CONSTRUCTION

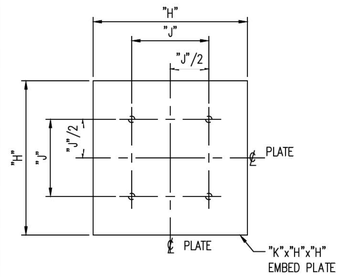

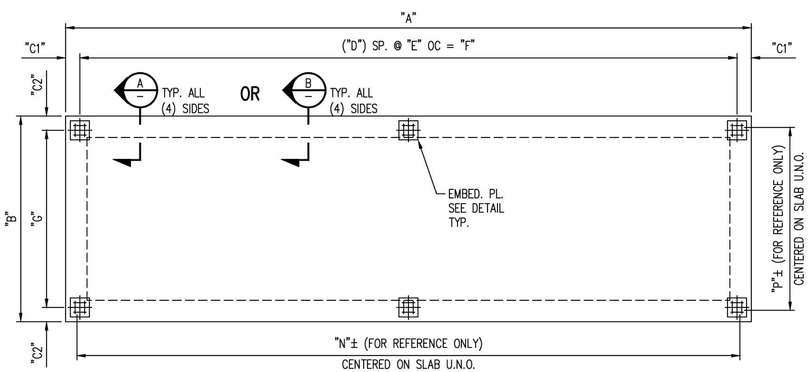

PLAN

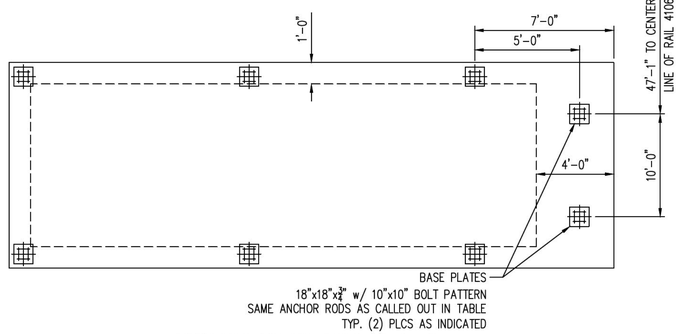

PLAN FOR MK-TS-0200-F2 & F5
SEE PLAN VIEW THIS PAGE FOR ALL OTHER DETAILS

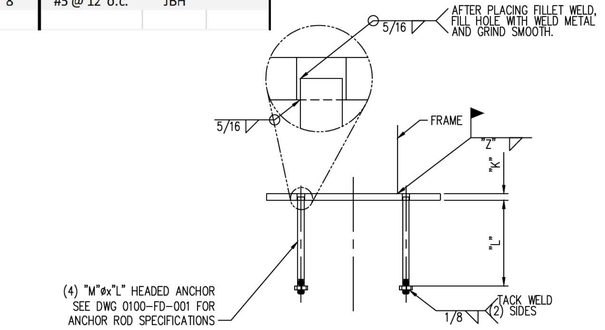

EMBED. PLATE DETAIL
NTS

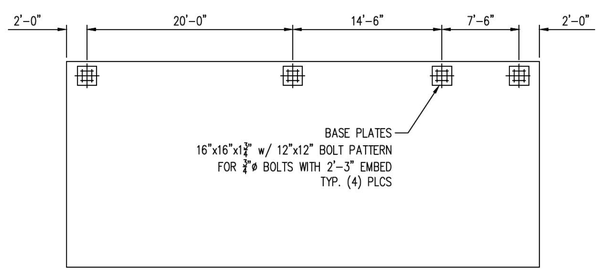

PLAN FOR MK-TS-0200-F4
SEE PLAN VIEW THIS PAGE FOR ALL OTHER DETAILS

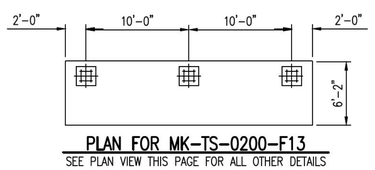

PLAN FOR MK-TS-0200-F13
SEE PLAN VIEW THIS PAGE FOR ALL OTHER DETAILS

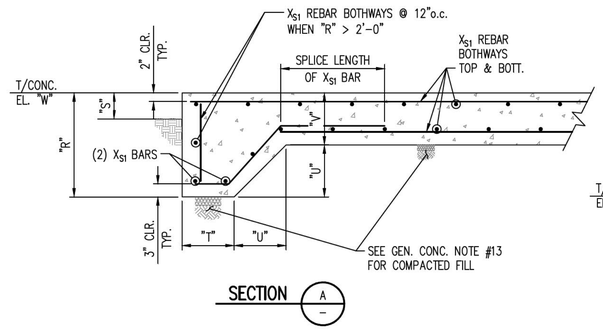

SECTION A

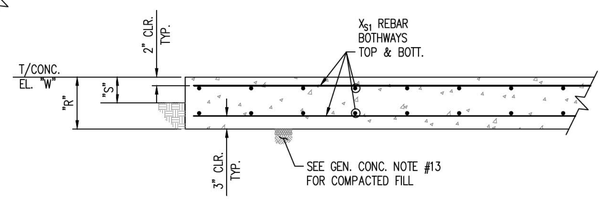

SECTION B

NO.	DATE	REVISION	BY	CK'D	APP
–	–	–	–	–	–
HH	11/14/14		NLB	–	–

R&M ENGINEERING CONSULTANTS
SALT LAKE CITY, UTAH
(801)263-3419
13014

TESORO SAVAGE

THIS DRAWING CONTAINS PROPRIETARY AND PRIVILEGED INFORMATION OF TESORO SAVAGE PETROLEUM LLC AND SHALL NOT BE DISCLOSED OR USED FOR THE BENEFIT OF OTHERS WITHOUT PRIOR WRITTEN PERMISSION OF THE DRAWING OWNER.

CUSTOMER: TESORO SAVAGE PETROLEUM TERMINAL LLC

PROJECT: TESORO SAVAGE VANCOUVER ENERGY DISTRIBUTION TERMINAL LLC
PORT OF VANCOUVER, WASHINGTON

DESCRIPTION: THICKENED SLAB
SCHEDULE, PLAN, ELEVATIONS, & DETAILS

DESIGN:		START DATE: 08-06-13	SCALE: NTS
DRAWN: JBH		PRINT DATE:	PROJECT MANAGER: DC
CHECKED:		APPROVED:	SIZE: 24x36
DRAWING NUMBER			SHEET 1/1 REV. HH
0100-FD-007			

Footing Schedule Area 0100

EX-0001-007560-PCE

Drilled Pier - DP - Footing Schedule

Ftg. Mk.	Remarks	Qty	DWG #	Dimensions									Elev.	Rebar			Made By	Chk'd By
				A (ϕ)	B	C	E (ϕ)	F	J	K	L	M	P	Qty. (XP1)	XP1	XP2		
MK-DP-0200-F1	Area 0200 Cable Tray Supports	24	0200-FD-001,2,3,4,5	36"	10'-0"	1'-0"	3/4"	27"	1 3/4"	1'-4"	1'-0"	-	32'-6"	8	#8 BARS	#4 BARS	JBH	
MK-DP-0300-F1	Area 0300 Cable Tray Supports	37	0300-FD-002	36"	10'-0"	1'-0"	3/4"	27"	1 3/4"	1'-4"	1'-0"	-	32'-6"	8	#8 BARS	#4 BARS	JBH	
MK-DP-0300-F2	Area 0300 Cable Tray Supports	1	0300-FD-002	36"	10'-0"	1'-0"	3/4"	27"	2 3/4"	1'-4"	1'-0"	-	35'-0"	8	#8 BARS	#4 BARS	JBH	
MK-DP-0300-F3	Area 0300 Cable Tray Supports	1	0300-FD-002	36"	10'-0"	1'-0"	3/4"	27"	3 3/4"	1'-4"	1'-0"	-	35'-0"	8	#8 BARS	#4 BARS	JBH	
MK-DP-0300-F4	Area 0300 Cable Tray Supports	1	0300-FD-002	36"	10'-0"	1'-0"	3/4"	27"	4 3/4"	1'-4"	1'-0"	-	35'-0"	8	#8 BARS	#4 BARS	JBH	
MK-DP-0400-F1	Area 0400 E-House	10	0400-FD-001	36"	10'-0"	6'-0"	3/4"	18"	3/4"	2'-0"	12"	1/4"	33'-0"	8	#8 BARS	#4 BARS	JBH	
MK-DP-0400-F2	Area 0400 MVCU Pipe Supports	15	0400-FD-001	36"	12'-0"	1'-8"	7/8"	12"	3/4"	2'-0"	12"	1/4"	31'-0"	8	(16) #7 BARS	#4 BARS	NMJ	
MK-DP-0400-F3	Area 0400 Blower Pipe Supports	5	0400-FD-001	24"	6'-6"	1'-8"	3/4"	12"	3/4"	1'-5"	8"	1/4"	31'-0"	8	(8) #7 BARS	#4 BARS	NMJ	
MK-DP-0400-F4	Area 0400 Cable Tray Supports	7	0400-FD-001	36"	8'-0"	2'-0"	3/4"	27"	1"	2'-0"	12"	1/4"	31'-0"	8	(16) #7 BARS	#4 BARS	JBH	
MK-DP-0400-F5	Area 0500 Fire Foam BLDG	10	0400-FD-001	36"	10'-0"	2'-6"	3/4"	30"	3/4"	1'-0"	9"	1/4"	30'-6"	12	#6 BARS	#4 BARS	PDM	
MK-DP-0600-F1	Area 0600 Equipment Pedistal	8	0600-FD-001	24"	6'-6"	1'-8"	3/4"	12"	3/4"	1'-5"	8"	1/4"	31'-1"	8	#7 BARS	#4 BARS	JBH	

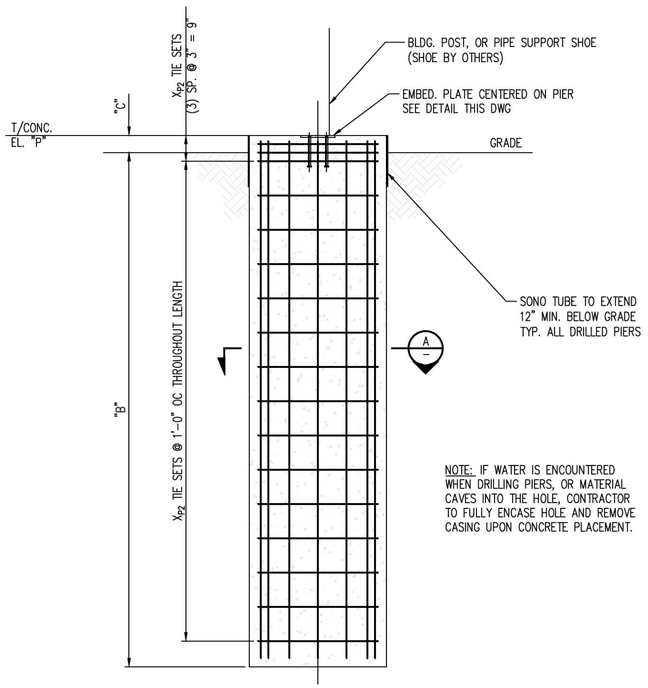

PIER TYPE A

NOTE: IF WATER IS ENCOUNTERED WHEN DRILLING PIERS, OR MATERIAL CAVES INTO THE HOLE, CONTRACTOR TO FULLY ENCASE HOLE AND REMOVE CASING UPON CONCRETE PLACEMENT.

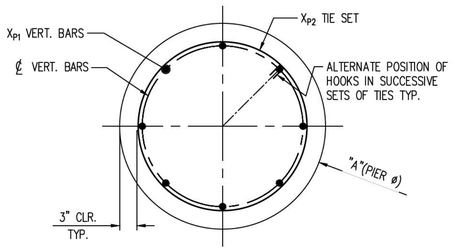

SECTION A

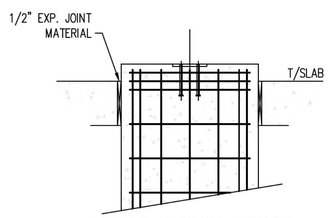

PIERS WITH CONC AROUND
NTS

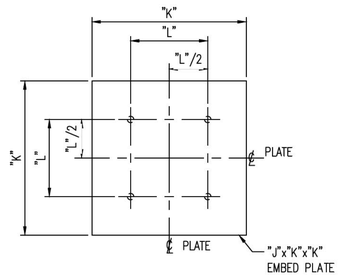

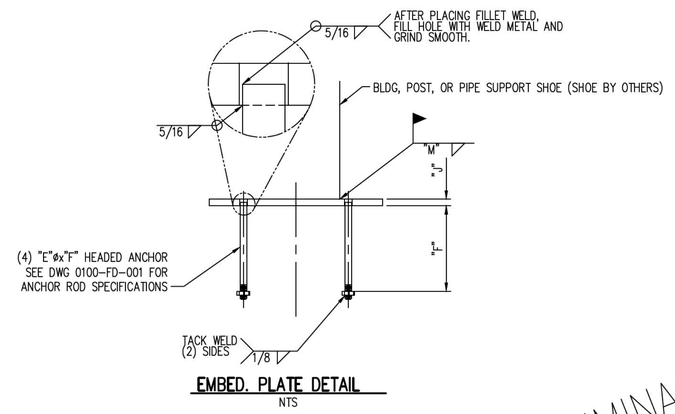

EMBED. PLATE DETAIL
NTS

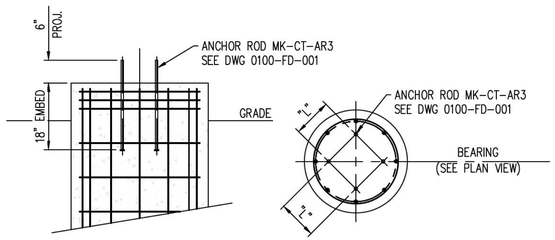

PIERS WITH ANCHOR ROD
NTS

PRELIMINARY
NOT FOR CONSTRUCTION

NOTES:
1. FOR CONCRETE GENERAL NOTES SEE DWG 0100-FD-001.
2. TOLERANCE ON ELEVATION OF TOPS OF EMBEDDED PLATES ARE ±1/8"

NO.	DATE	REVISION	BY	CK'D	APP
–	–	–	–	–	–
HH	11/14/14		NLB	–	–

Footing Schedule Area 0100

R&M ENGINEERING CONSULTANTS
SALT LAKE CITY, UTAH
(801)263-3419
13014

TESORO SAVAGE

THIS DRAWING CONTAINS PROPRIETARY AND PRIVILEGED INFORMATION OF TESORO SAVAGE PETROLEUM LLC AND SHALL NOT BE DISCLOSED OR USED FOR THE BENEFIT OF OTHERS WITHOUT PRIOR WRITTEN PERMISSION OF THE DRAWING OWNER.

CUSTOMER: TESORO SAVAGE PETROLEUM TERMINAL LLC

PROJECT: TESORO SAVAGE VANCOUVER ENERGY DISTRIBUTION TERMINAL LLC
PORT OF VANCOUVER, WASHINGTON

DESCRIPTION:
DRILLED PIER SCHEDULE
ELEVATION & SECTION VIEWS & TABLE

DESIGN:		START DATE:	08-02-13	SCALE:	NTS
DRAWN:	MWD	PRINT DATE:		PROJECT MANAGER:	DC
CHECKED:		APPROVED:		SIZE:	24x36

DRAWING NUMBER	SHEET	REV.
0100-FD-008	1/1	HH

EX-0001-007561-PCE

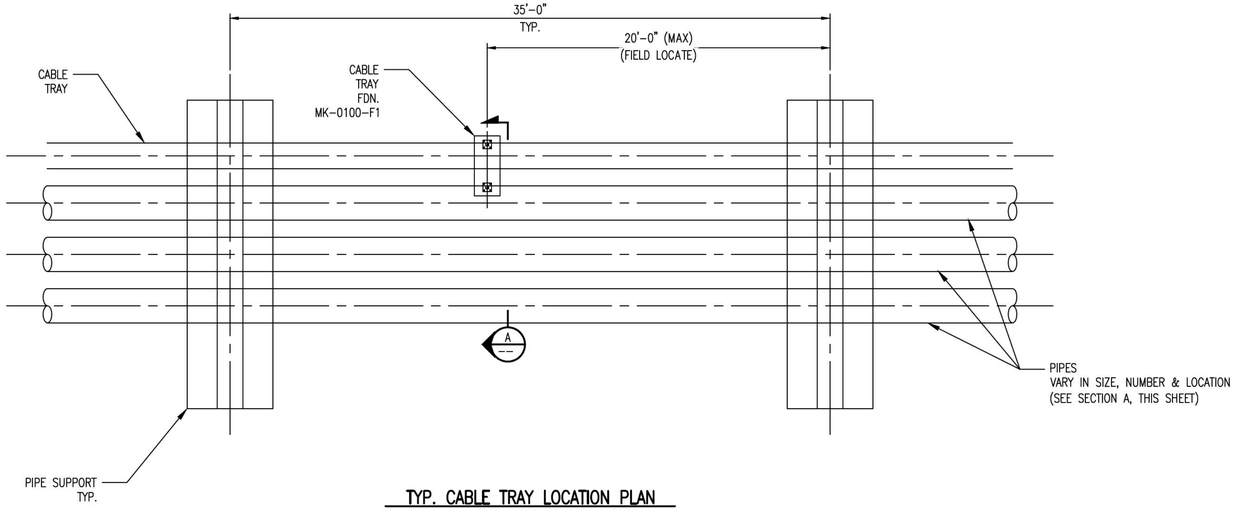

TYP. CABLE TRAY LOCATION PLAN

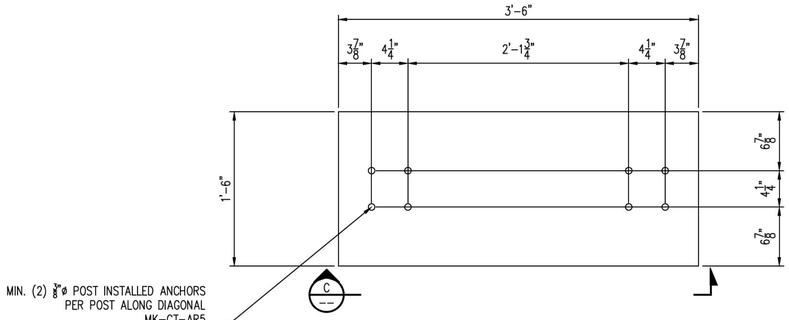

CABLE TRAY FOUNDATION PLAN VIEW

MK-0100-F1

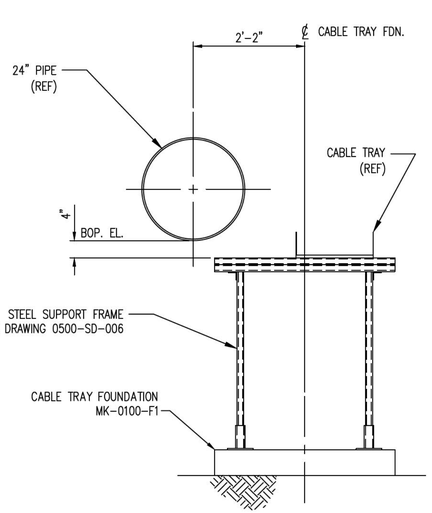

PIPELINE ARRANGEMENTS W/OUT 36"ø PIPE

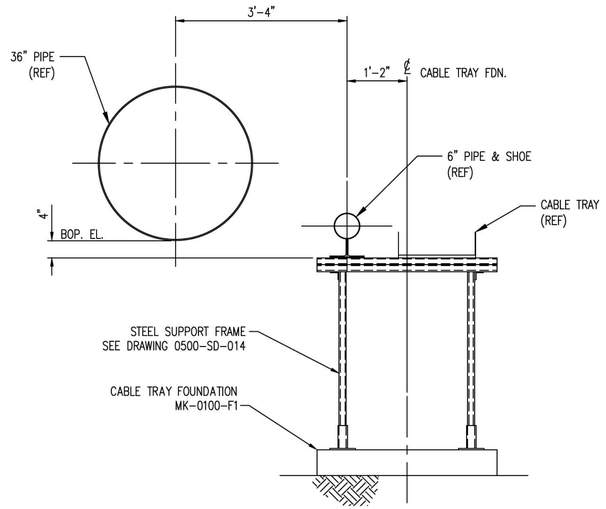

PIPELINE ARRANGEMENTS W/ 36"ø PIPE

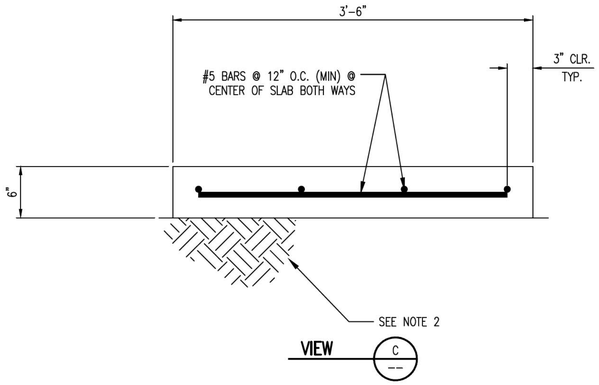

SECTION A

PRELIMINARY

NOT FOR CONSTRUCTION

NOTES:

1. FOR CONCRETE GENERAL NOTES SEE DWG 0100-FD-001.
2. FOUNDATION TO BE UNDERLAIN BY 12" OF RELATIVELY CLEAN GRANULAR STRUCTURAL FILL WITH LESS THAN 10% PASSING THE NO. 200 SIEVE.
3. CABLE TRAY FOUNDATIONS TO BE LOCATED BETWEEN EACH NON-ELEVATED PIPE SUPPORT IN AREAS 400 & 500.
4. FOR ANCHOR ROD SCHEDULE, SEE DWG. 0100-FD-001.

NO.	DATE	REVISION	BY	CK'D	APP
HH	11/14/14		NLB	–	–

Footing Schedule Area 0100

R&M ENGINEERING CONSULTANTS
SALT LAKE CITY, UTAH
(801)263-3419

13014

TESORO SAVAGE

THIS DRAWING CONTAINS PROPRIETARY AND PRIVILEGED INFORMATION OF TESORO SAVAGE PETROLEUM LLC AND SHALL NOT BE DISCLOSED OR USED FOR THE BENEFIT OF OTHERS WITHOUT PRIOR WRITTEN PERMISSION OF THE DRAWING OWNER.

CUSTOMER: TESORO SAVAGE PETROLEUM TERMINAL LLC

PROJECT: TESORO SAVAGE VANCOUVER ENERGY DISTRIBUTION TERMINAL LLC
PORT OF VANCOUVER, WASHINGTON

DESCRIPTION:
CABLE TRAY FOOTING SCHEDULE
ELEVATION & SECTION VIEWS

DESIGN:	START DATE: 12-16-13	SCALE:	NTS
DRAWN: NMJ	PRINT DATE:	PROJECT MANAGER:	DC
CHECKED:	APPROVED:	SIZE:	24x36

DRAWING NUMBER	SHEET	REV.
0100-FD-011	1/1	HH

EX-0001-007562-PCE

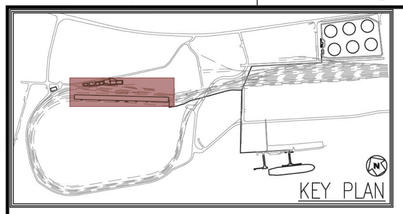

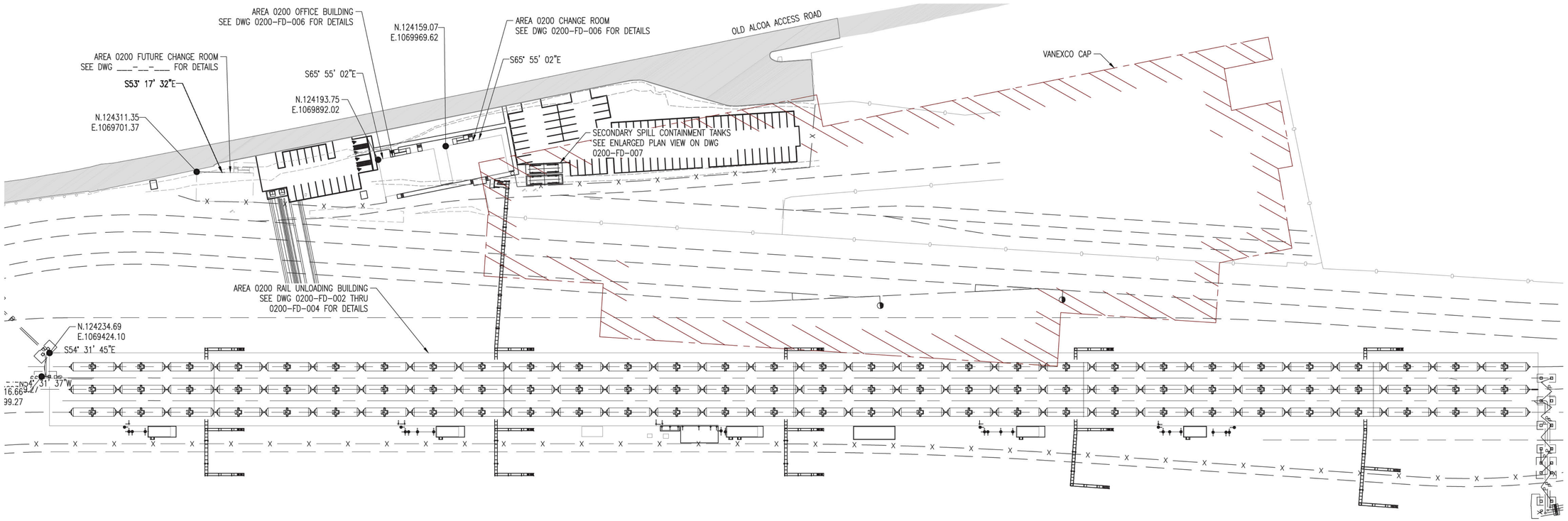

PLAN
1"=60'

N

PRELIMINARY
NOT FOR CONSTRUCTION

NO.	DATE	REVISION	BY	CK'D	APP
–	–	–	–	–	–
HH	11-14-14		NLB	–	–

R&M ENGINEERING CONSULTANTS
SALT LAKE CITY, UTAH
(801)263-3419

13014

TESORO SAVAGE

THIS DRAWING CONTAINS PROPRIETARY AND PRIVILEGED INFORMATION OF TESORO SAVAGE PETROLEUM LLC AND SHALL NOT BE DISCLOSED OR USED FOR THE BENEFIT OF OTHERS WITHOUT PRIOR WRITTEN PERMISSION OF THE DRAWING OWNER.

CUSTOMER: TESORO SAVAGE PETROLEUM TERMINAL LLC

PROJECT: TESORO SAVAGE VANCOUVER ENERGY DISTRIBUTION TERMINAL LLC
PORT OF VANCOUVER, WASHINGTON

DESCRIPTION: FOOTING & FOUNDATION PLOT PLAN
AREA 0200

DESIGN:		START DATE: 07-31-13	SCALE: 1"=250'
DRAWN: NMJ		PRINT DATE:	PROJECT MANAGER: DC
CHECKED:		APPROVED:	SIZE: 24x36
DRAWING NUMBER			SHEET 1/1 REV. HH
0200-FD-001			

13014 FOUNDATION PLOT PLAN 11-12-14

EX-0001-007563-PCE

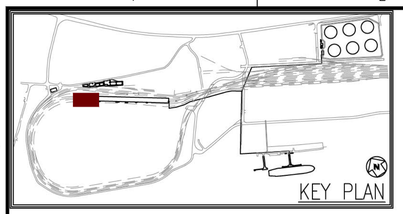

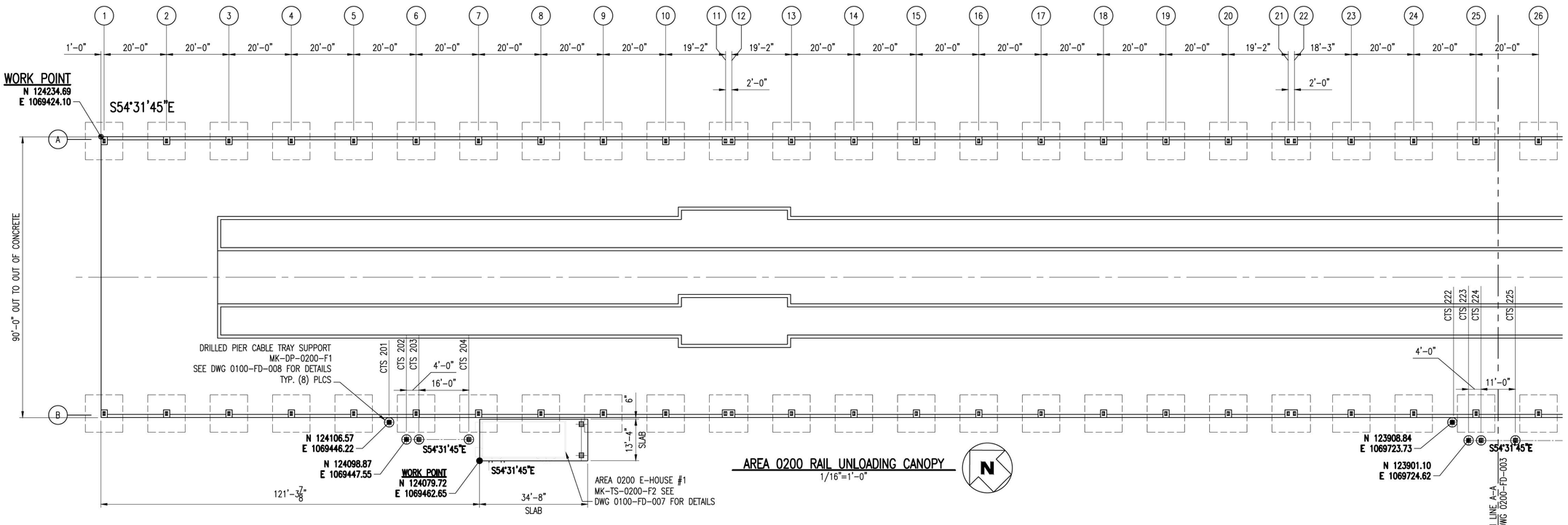

AREA 0200 RAIL UNLOADING CANOPY
1/16"=1'–0"

N

See Dwg. 0100-FD-005 FOR FOOTING DETAILS

Column Lines	Ftg. Mk	Column Lines	Ftg. Mk	Column Lines	Ftg. Mk	Column Lines	Ftg. Mk
1-A	MK-PB-0200-F1	1-B	MK-PB-0200-F1	14-A	MK-PB-0200-F2	14-B	MK-PB-0200-F2
2-A	MK-PB-0200-F2	2-B	MK-PB-0200-F2	15-A	MK-PB-0200-F2	15-B	MK-PB-0200-F2
3-A	MK-PB-0200-F2	3-B	MK-PB-0200-F2	16-A	MK-PB-0200-F2	16-B	MK-PB-0200-F2
4-A	MK-PB-0200-F2	4-B	MK-PB-0200-F2	17-A	MK-PB-0200-F2	17-B	MK-PB-0200-F2
5-A	MK-PB-0200-F2	5-B	MK-PB-0200-F2	18-A	MK-PB-0200-F2	18-B	MK-PB-0200-F2
6-A	MK-PB-0200-F2	6-B	MK-PB-0200-F2	19-A	MK-PB-0200-F2	19-B	MK-PB-0200-F2
7-A	MK-PB-0200-F2	7-B	MK-PB-0200-F2	20-A	MK-PB-0200-F2	20-B	MK-PB-0200-F2
8-A	MK-PB-0200-F2	8-B	MK-PB-0200-F2	21-A	MK-PB-0200-F3	21-B	MK-PB-0200-F3
9-A	MK-PB-0200-F2	9-B	MK-PB-0200-F2	22-A	MK-PB-0200-F3	22-B	MK-PB-0200-F3
10-A	MK-PB-0200-F2	10-B	MK-PB-0200-F2	23-A	MK-PB-0200-F2	23-B	MK-PB-0200-F2
11-A	MK-PB-0200-F3	11-B	MK-PB-0200-F3	24-A	MK-PB-0200-F2	24-B	MK-PB-0200-F2
12-A	MK-PB-0200-F3	12-B	MK-PB-0200-F3	25-A	MK-PB-0200-F2	25-B	MK-PB-0200-F2
13-A	MK-PB-0200-F2	13-B	MK-PB-0200-F2	26-A	MK-PB-0200-F2	26-B	MK-PB-0200-F2

PRELIMINARY
NOT FOR CONSTRUCTION

NOTES:
1. FOR ANCHOR ROD LOCATIONS SEE STEEL BLDG DWG. BY
2. FOR CONCRETE GENERAL NOTES SEE DWG 0100–FD–001.
3. FOR ANCHOR ROD SCHEDULE SEE DWG 0100–FD–001.
4.

0 8' 16' 32' 48' 64'
1/16"=1'–0"

NO.	DATE	REVISION	BY	CK'D	APP
–	–	–	–	–	–
HH	11/14/14		NLB	–	–

13014 Foundations Area 0200 11-14-14

R&M ENGINEERING CONSULTANTS
SALT LAKE CITY, UTAH
(801)263-3419
13014

TESORO SAVAGE

THIS DRAWING CONTAINS PROPRIETARY AND PRIVILEGED INFORMATION OF TESORO SAVAGE PETROLEUM LLC AND SHALL NOT BE DISCLOSED OR USED FOR THE BENEFIT OF OTHERS WITHOUT PRIOR WRITTEN PERMISSION OF THE DRAWING OWNER.

CUSTOMER: TESORO SAVAGE PETROLEUM TERMINAL LLC

PROJECT: TESORO SAVAGE VANCOUVER ENERGY DISTRIBUTION TERMINAL LLC
PORT OF VANCOUVER, WASHINGTON

DESCRIPTION: AREA 0200 RAIL UNLOADING CANOPY
FOUNDATION PLAN VIEW – SECTION 1

DESIGN:	START DATE: 08–26–13	SCALE:	AS SHOWN
DRAWN: PDM	PRINT DATE:	PROJECT MANAGER:	DC
CHECKED:	APPROVED:	SIZE:	24x36
DRAWING NUMBER		SHEET	REV.
0200–FD–002		1/1	HH

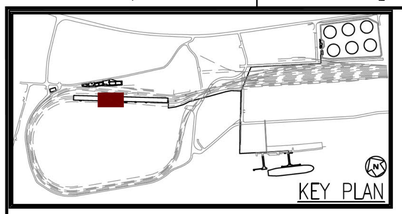

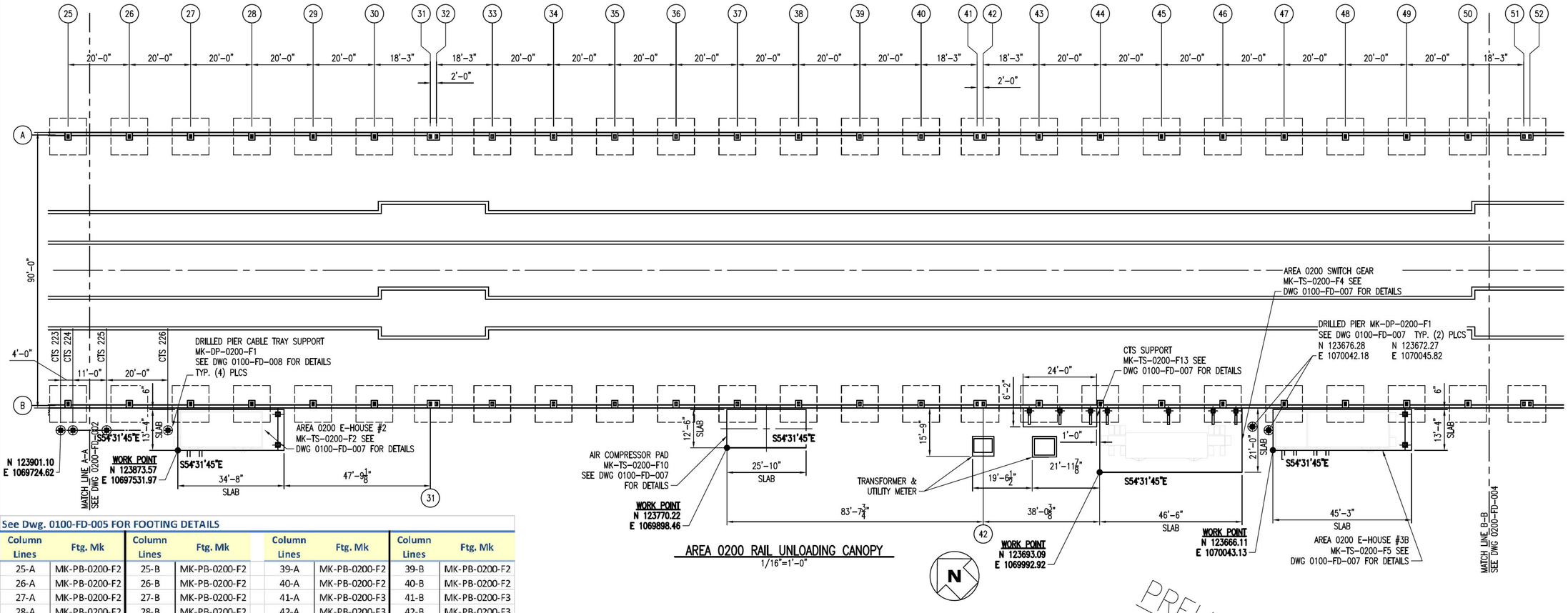

AREA 0200 RAIL UNLOADING CANOPY

1/16"=1'-0"

See Dwg. 0100-FD-005 FOR FOOTING DETAILS

Column Lines	Ftg. Mk	Column Lines	Ftg. Mk	Column Lines	Ftg. Mk	Column Lines	Ftg. Mk
25-A	MK-PB-0200-F2	25-B	MK-PB-0200-F2	39-A	MK-PB-0200-F2	39-B	MK-PB-0200-F2
26-A	MK-PB-0200-F2	26-B	MK-PB-0200-F2	40-A	MK-PB-0200-F2	40-B	MK-PB-0200-F2
27-A	MK-PB-0200-F2	27-B	MK-PB-0200-F2	41-A	MK-PB-0200-F3	41-B	MK-PB-0200-F3
28-A	MK-PB-0200-F2	28-B	MK-PB-0200-F2	42-A	MK-PB-0200-F3	42-B	MK-PB-0200-F3
29-A	MK-PB-0200-F2	29-B	MK-PB-0200-F2	43-A	MK-PB-0200-F2	43-B	MK-PB-0200-F2
30-A	MK-PB-0200-F2	30-B	MK-PB-0200-F2	44-A	MK-PB-0200-F2	44-B	MK-PB-0200-F2
31-A	MK-PB-0200-F3	31-B	MK-PB-0200-F3	45-A	MK-PB-0200-F2	45-B	MK-PB-0200-F2
32-A	MK-PB-0200-F3	32-B	MK-PB-0200-F3	46-A	MK-PB-0200-F2	46-B	MK-PB-0200-F2
33-A	MK-PB-0200-F2	33-B	MK-PB-0200-F2	47-A	MK-PB-0200-F2	47-B	MK-PB-0200-F2
34-A	MK-PB-0200-F2	34-B	MK-PB-0200-F2	48-A	MK-PB-0200-F2	48-B	MK-PB-0200-F2
35-A	MK-PB-0200-F2	35-B	MK-PB-0200-F2	49-A	MK-PB-0200-F2	49-B	MK-PB-0200-F2
36-A	MK-PB-0200-F2	36-B	MK-PB-0200-F2	50-A	MK-PB-0200-F2	50-B	MK-PB-0200-F2
37-A	MK-PB-0200-F2	37-B	MK-PB-0200-F2	51-A	MK-PB-0200-F3	51-B	MK-PB-0200-F3
38-A	MK-PB-0200-F2	38-B	MK-PB-0200-F2	52-A	MK-PB-0200-F3	52-B	MK-PB-0200-F3

PRELIMINARY
NOT FOR CONSTRUCTION

0 8' 16' 32' 48' 64'
1/16"=1'-0"

NOTES:

1. FOR ANCHOR ROD LOCATIONS SEE STEEL BLDG DWG. BY _____
2. FOR CONCRETE GENERAL NOTES SEE DWG 0100-FD-001.
3. FOR ANCHOR ROD SCHEDULE SEE DWG 0100-FD-001.
4.

NO.	DATE	REVISION	BY	CK'D	APP
–	–	–	–	–	–
HH	11/14/14		NLB	–	–

13014 Foundation Area 0200 11-14-14

R&M ENGINEERING CONSULTANTS
SALT LAKE CITY, UTAH
(801)263-3419
13014

TESORO SAVAGE

THIS DRAWING CONTAINS PROPRIETARY AND PRIVILEGED INFORMATION OF TESORO SAVAGE PETROLEUM LLC AND SHALL NOT BE DISCLOSED OR USED FOR THE BENEFIT OF OTHERS WITHOUT PRIOR WRITTEN PERMISSION OF THE DRAWING OWNER.

CUSTOMER: TESORO SAVAGE PETROLEUM TERMINAL LLC

PROJECT: TESORO SAVAGE VANCOUVER ENERGY DISTRIBUTION TERMINAL LLC
PORT OF VANCOUVER, WASHINGTON

DESCRIPTION: AREA 0200 RAIL UNLOADING CANOPY
FOUNDATION PLAN VIEW – SECTION 2

DESIGN:	START DATE: 08-26-13	SCALE:	AS SHOWN
DRAWN: PDM	PRINT DATE:	PROJECT MANAGER:	DC
CHECKED:	APPROVED:	SIZE:	24x36
DRAWING NUMBER		SHEET	REV.
0200-FD-003		1/1	HH

EX-0001-007565-PCE

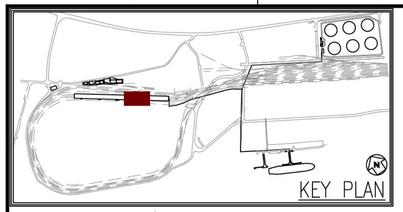

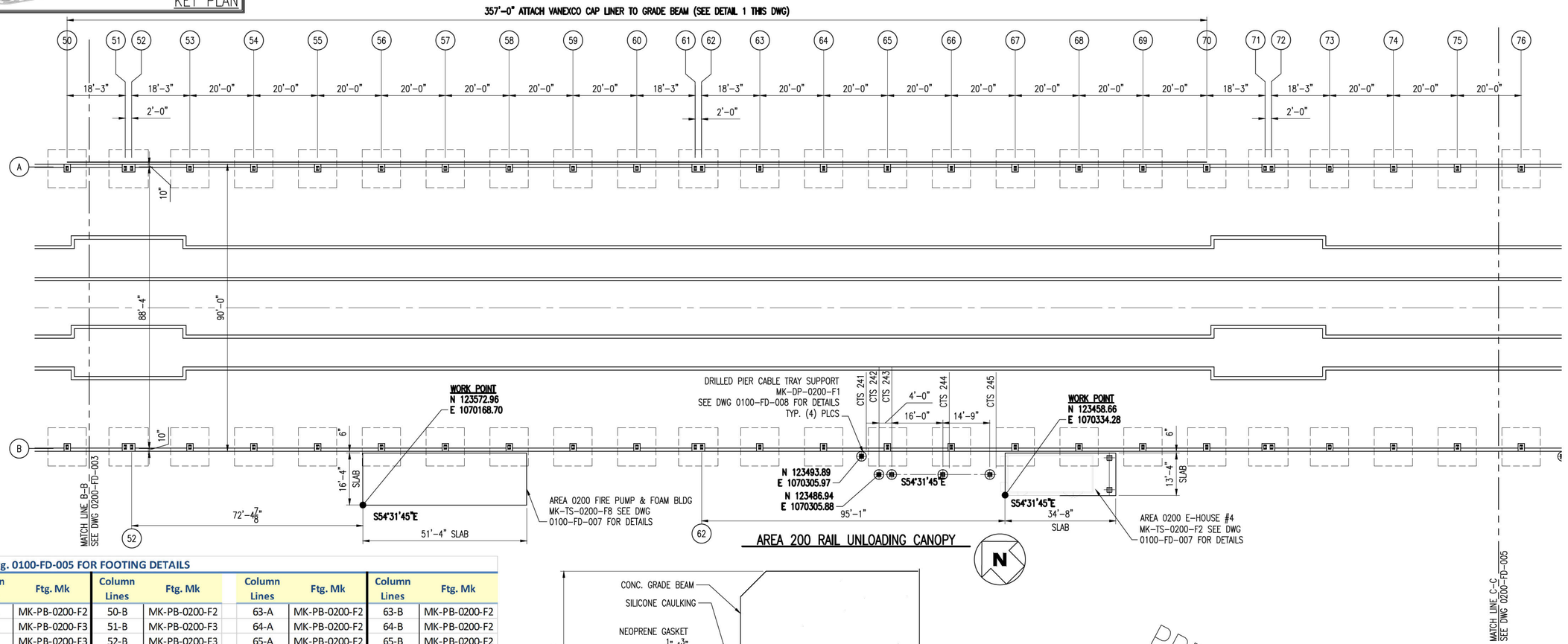

AREA 200 RAIL UNLOADING CANOPY

See Dwg. 0100-FD-005 FOR FOOTING DETAILS

Column Lines	Ftg. Mk	Column Lines	Ftg. Mk	Column Lines	Ftg. Mk	Column Lines	Ftg. Mk
50-A	MK-PB-0200-F2	50-B	MK-PB-0200-F2	63-A	MK-PB-0200-F2	63-B	MK-PB-0200-F2
51-A	MK-PB-0200-F3	51-B	MK-PB-0200-F3	64-A	MK-PB-0200-F2	64-B	MK-PB-0200-F2
52-A	MK-PB-0200-F3	52-B	MK-PB-0200-F3	65-A	MK-PB-0200-F2	65-B	MK-PB-0200-F2
53-A	MK-PB-0200-F2	53-B	MK-PB-0200-F2	66-A	MK-PB-0200-F2	66-B	MK-PB-0200-F2
54-A	MK-PB-0200-F2	54-B	MK-PB-0200-F2	67-A	MK-PB-0200-F2	67-B	MK-PB-0200-F2
55-A	MK-PB-0200-F2	55-B	MK-PB-0200-F2	68-A	MK-PB-0200-F2	68-B	MK-PB-0200-F2
56-A	MK-PB-0200-F2	56-B	MK-PB-0200-F2	69-A	MK-PB-0200-F2	69-B	MK-PB-0200-F2
57-A	MK-PB-0200-F2	57-B	MK-PB-0200-F2	70-A	MK-PB-0200-F2	70-B	MK-PB-0200-F2
58-A	MK-PB-0200-F2	58-B	MK-PB-0200-F2	71-A	MK-PB-0200-F3	71-B	MK-PB-0200-F3
59-A	MK-PB-0200-F2	59-B	MK-PB-0200-F2	72-A	MK-PB-0200-F3	72-B	MK-PB-0200-F3
60-A	MK-PB-0200-F2	60-B	MK-PB-0200-F2	73-A	MK-PB-0200-F2	73-B	MK-PB-0200-F2
61-A	MK-PB-0200-F3	61-B	MK-PB-0200-F3	74-A	MK-PB-0200-F2	74-B	MK-PB-0200-F2
62-A	MK-PB-0200-F3	62-B	MK-PB-0200-F3	75-A	MK-PB-0200-F2	75-B	MK-PB-0200-F2
				76-A	MK-PB-0200-F2	76-B	MK-PB-0200-F2

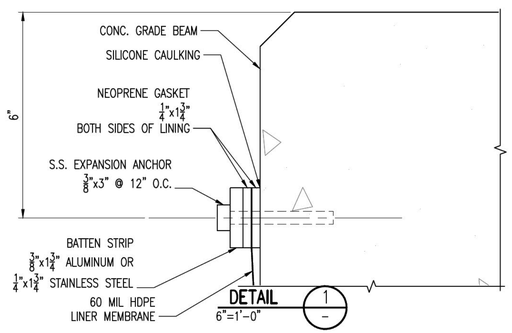

PRELIMINARY
NOT FOR CONSTRUCTION

1/16"=1'-0" 0 8' 16' 32' 48' 64'

NOTES:

1. FOR ANCHOR ROD LOCATIONS SEE STEEL BLDG DWG. BY _____.
2. FOR CONCRETE GENERAL NOTES SEE DWG 0100-FD-001.
3. FOR ANCHOR ROD SCHEDULE SEE DWG 0100-FD-001.
4.

NO.	DATE	REVISION	BY	CK'D	APP
–	–	–	–	–	–
HH	11/14/14		NLB	–	–

R&M ENGINEERING CONSULTANTS
SALT LAKE CITY, UTAH
(801)263-3419
13014

TESORO SAVAGE

THIS DRAWING CONTAINS PROPRIETARY AND PRIVILEGED INFORMATION OF TESORO SAVAGE PETROLEUM LLC AND SHALL NOT BE DISCLOSED OR USED FOR THE BENEFIT OF OTHERS WITHOUT PRIOR WRITTEN PERMISSION OF THE DRAWING OWNER.

CUSTOMER: TESORO SAVAGE PETROLEUM TERMINAL LLC

PROJECT: TESORO SAVAGE VANCOUVER ENERGY DISTRIBUTION TERMINAL LLC
PORT OF VANCOUVER, WASHINGTON

DESCRIPTION: AREA 0200 RAIL UNLOADING CANOPY
FOUNDATION PLAN VIEW – SECTION 3

DESIGN:	START DATE: 08-26-13	SCALE:	AS SHOWN
DRAWN: PDM	PRINT DATE:	PROJECT MANAGER:	DC
CHECKED:	APPROVED:	SIZE:	24x36
DRAWING NUMBER		SHEET	REV.
0200-FD-004		1/1	HH

13014 Foundation Area 0200 11-14-14

EX-0001-007566-PCE

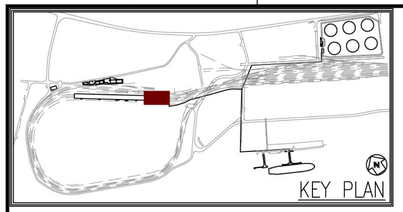

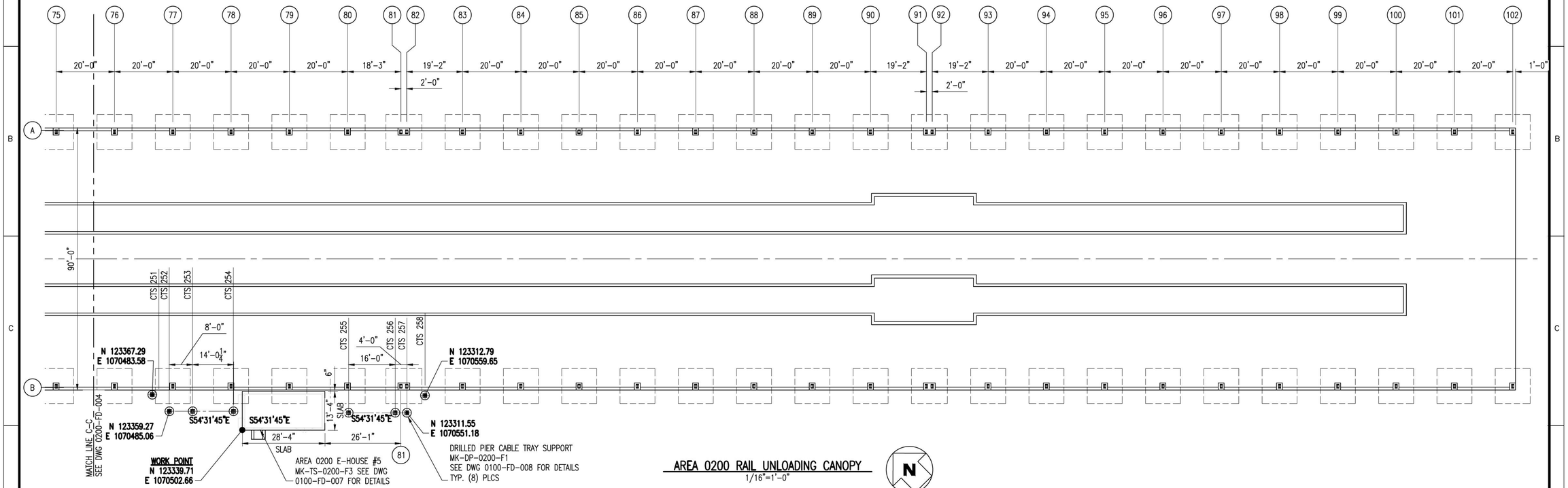

AREA 0200 RAIL UNLOADING CANOPY

1/16"=1'-0"

See Dwg. 0100-FD-005 FOR FOOTING DETAILS

Column Lines	Ftg. Mk	Column Lines	Ftg. Mk	Column Lines	Ftg. Mk	Column Lines	Ftg. Mk
75-A	MK-PB-0200-F2	75-B	MK-PB-0200-F2	89-A	MK-PB-0200-F2	89-B	MK-PB-0200-F2
76-A	MK-PB-0200-F2	76-B	MK-PB-0200-F2	90-A	MK-PB-0200-F2	90-B	MK-PB-0200-F2
77-A	MK-PB-0200-F2	77-B	MK-PB-0200-F2	91-A	MK-PB-0200-F3	91-B	MK-PB-0200-F3
78-A	MK-PB-0200-F2	78-B	MK-PB-0200-F2	92-A	MK-PB-0200-F3	92-B	MK-PB-0200-F3
79-A	MK-PB-0200-F2	79-B	MK-PB-0200-F2	93-A	MK-PB-0200-F2	93-B	MK-PB-0200-F2
80-A	MK-PB-0200-F2	80-B	MK-PB-0200-F2	94-A	MK-PB-0200-F2	94-B	MK-PB-0200-F2
81-A	MK-PB-0200-F3	81-B	MK-PB-0200-F3	95-A	MK-PB-0200-F2	95-B	MK-PB-0200-F2
82-A	MK-PB-0200-F3	82-B	MK-PB-0200-F3	96-A	MK-PB-0200-F2	96-B	MK-PB-0200-F2
83-A	MK-PB-0200-F2	83-B	MK-PB-0200-F2	97-A	MK-PB-0200-F2	97-B	MK-PB-0200-F2
84-A	MK-PB-0200-F2	84-B	MK-PB-0200-F2	98-A	MK-PB-0200-F2	98-B	MK-PB-0200-F2
85-A	MK-PB-0200-F2	85-B	MK-PB-0200-F2	99-A	MK-PB-0200-F2	99-B	MK-PB-0200-F2
86-A	MK-PB-0200-F2	86-B	MK-PB-0200-F2	100-A	MK-PB-0200-F2	100-B	MK-PB-0200-F2
87-A	MK-PB-0200-F2	87-B	MK-PB-0200-F2	101-A	MK-PB-0200-F2	101-B	MK-PB-0200-F2
88-A	MK-PB-0200-F2	88-B	MK-PB-0200-F2	102-A	MK-PB-0200-F1	102-B	MK-PB-0200-F1

PRELIMINARY
NOT FOR CONSTRUCTION

1/16"=1'-0" 0 8' 16' 32' 48' 64'

NOTES:
1. FOR ANCHOR ROD LOCATIONS SEE STEEL BLDG DWG. BY
2. FOR CONCRETE GENERAL NOTES SEE DWG 0100-FD-001.
3. FOR ANCHOR ROD SCHEDULE SEE DWG 0100-FD-001.
4.

NO.	DATE	REVISION	BY	CK'D	APP
–	–	–	–	–	–
HH	11/14/14		NLB	–	–

13014 Foundation Area 0200 11-14-14

R&M ENGINEERING CONSULTANTS
SALT LAKE CITY, UTAH
(801)263-3419
13014

TESORO SAVAGE

THIS DRAWING CONTAINS PROPRIETARY AND PRIVILEGED INFORMATION OF TESORO SAVAGE PETROLEUM LLC AND SHALL NOT BE DISCLOSED OR USED FOR THE BENEFIT OF OTHERS WITHOUT PRIOR WRITTEN PERMISSION OF THE DRAWING OWNER.

CUSTOMER: TESORO SAVAGE PETROLEUM TERMINAL LLC

PROJECT: TESORO SAVAGE VANCOUVER ENERGY DISTRIBUTION TERMINAL LLC
PORT OF VANCOUVER, WASHINGTON

DESCRIPTION:
AREA 0200 RAIL UNLOADING CANOPY
FOUNDATION PLAN VIEW – SECTION 4

DESIGN:		START DATE: 08-26-13	SCALE: AS SHOWN
DRAWN: PDM		PRINT DATE:	PROJECT MANAGER: DC
CHECKED:		APPROVED:	SIZE: 24x36
DRAWING NUMBER			SHEET 1/1 REV. HH
0200-FD-005			

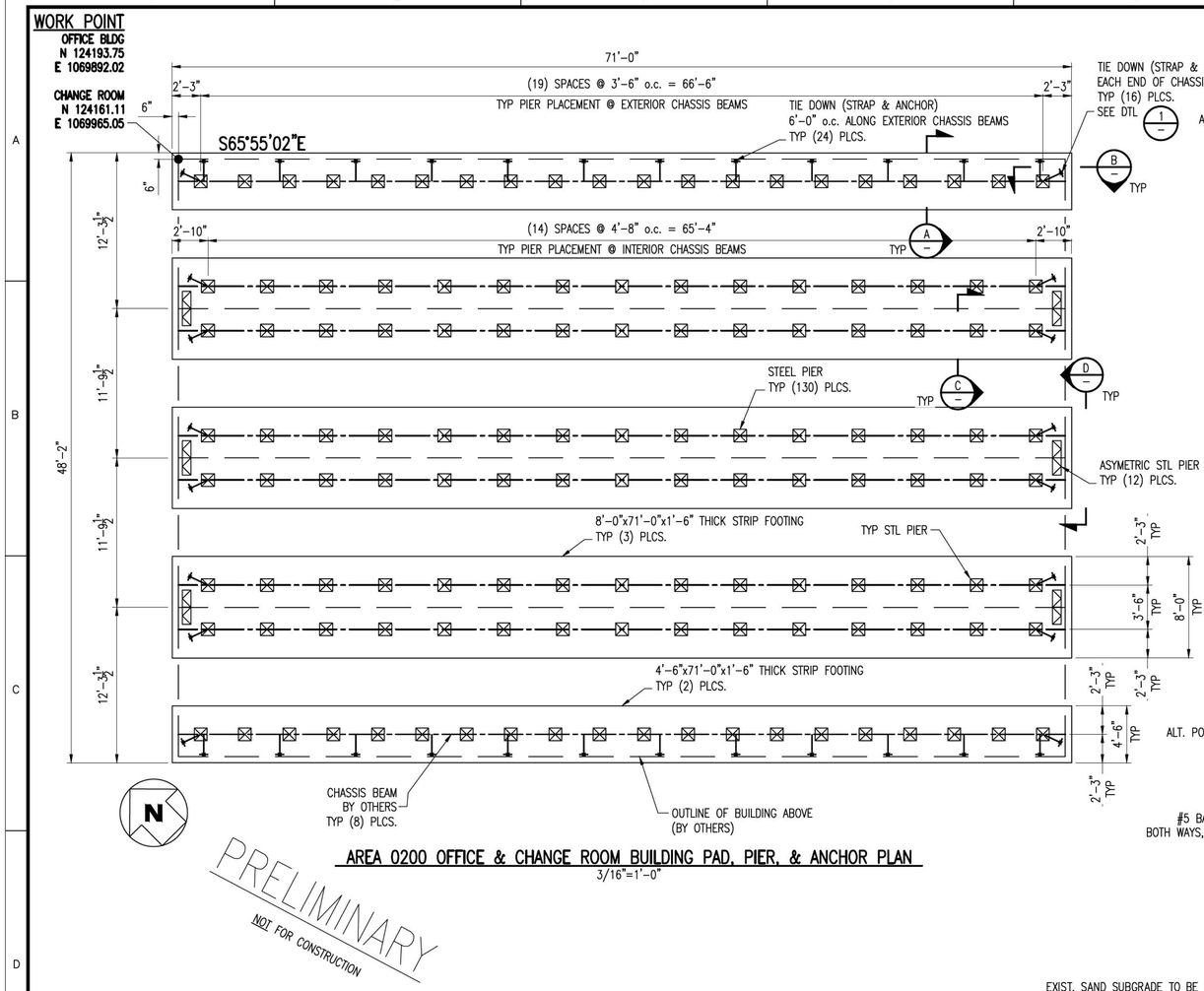

AREA 0200 OFFICE & CHANGE ROOM BUILDING PAD, PIER, & ANCHOR PLAN

3/16"=1'-0"

PRELIMINARY
NOT FOR CONSTRUCTION

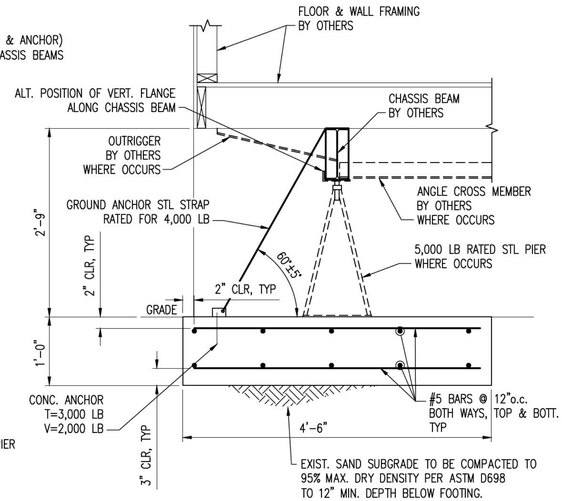

SECTION A
1"=1'-0"

NOTE:
TIE DOWN (STRAP & ANCHOR) @ 6'-0"o.c.
TYP @ EXTERIOR CHASSIS BEAMS

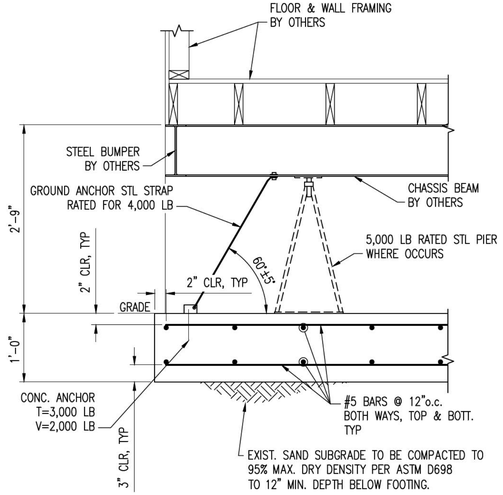

SECTION B
1"=1'-0"

NOTE:
TIE DOWN (STRAP & ANCHOR)
TYP @ EA. CHASSIS BEAM END

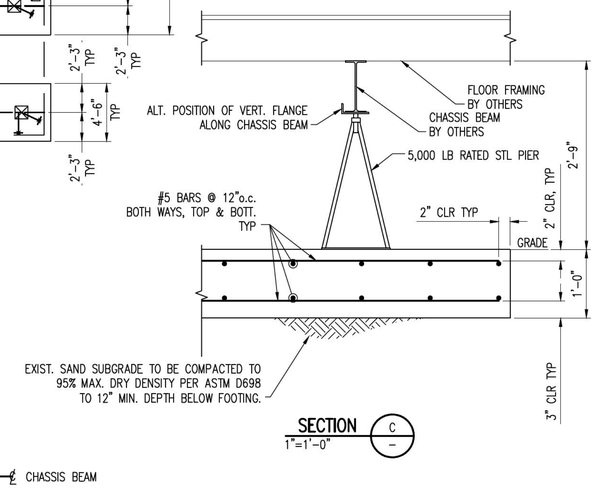

SECTION C
1"=1'-0"

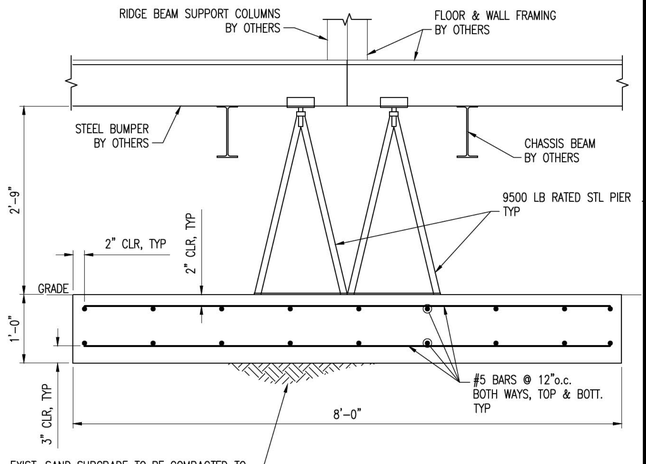

SECTION D
1"=1'-0"

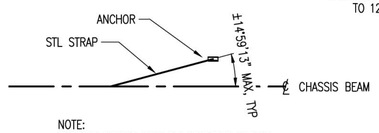

NOTE:
END TIE DOWNS CAN BE ORIENTED WITHIN
15° EITHER SIDE OF CHASSIS BEAM AXIS
AS SHOWN.

PLAN VIEW – STL STRAP @ CHASSIS END

DETAIL 1
N.T.S.

NOTES:

1. FOR CONCRETE GENERAL NOTES SEE DWG 0100–FD–001.
2. FOUNDATION DESIGN IS BASED ON:
   - 2.1. ASSUMED SIZES OF CHASSIS BEAM AND BUILDING FRAMING. ACTUAL SIZE OF THESE ELEMENTS TO BE REPORTED TO ENGINEER OF RECORD ONCE MANUFACTURED BUILDING HAS BEEN SELECTED.
   - 2.2. THE FLOOR AND ROOF ASSEMBLIES ACTING AS CONTINUOUS DIAPHRAGMS TO DISTRIBUTE LATERAL LOADS. REFER TO BUILDING MANUFACTURER'S INSTALLATION INSTRUCTIONS FOR PROPER INTER–MODULE CONNECTIONS.
3. ALL FASTENERS USED IN FOUNDATION MUST BE CORROSION RESISTANT. ADJACENT GROUND SURFACES SHOULD BE SLOPED AWAY FROM STRUCTURE @ ½"/FT FOR A MIN. DISTANCE OF 4'. DRAINAGE OF SURROUNDING AREA SHALL BE PROVIDED TO PREVENT ACCUMULATION OF SURFACE WATER.
4. UNDER FLOOR AREA MUST BE VENTILATED AT 1 SQ. FT. FOR EACH 150 SQ. FT. OF FLOOR AREA. OPENING MUST BE COVERED W/ CORROSION RESISTANT MESH WITH OPENINGS OF ¼".
5. STEEL STRAPS TO BE MIN. 1½" WIDE x 0.035" THICK ZINC PLATED & MEET ASTM D–395391.
6. STEEL STRAPS TO BE INSTALLED AT AN ANGLE TO HORIZ. OF 60°±5°

SCHEDULE

ITEM	QTY
5,000 LB STL PIER	130
9,500 LB STL PIER	12
GROUND ANCHOR STL STRAP	40
CONC. ANCHOR	40

0 6" 1' 2' 3' 4'
1"=1'-0"

0 2' 4' 8' 12' 16' 20'
3/16"=1'-0"

NO.	DATE	REVISION	BY	CK'D	APP
–	–	–	–	–	–
HH	11/14/14		NLB	–	–

13014 Foundations Area 0200 11-14-14

R&M ENGINEERING CONSULTANTS
SALT LAKE CITY, UTAH
(801)263-3419
13014

TESORO SAVAGE

THIS DRAWING CONTAINS PROPRIETARY AND PRIVILEGED INFORMATION OF TESORO SAVAGE PETROLEUM LLC AND SHALL NOT BE DISCLOSED OR USED FOR THE BENEFIT OF OTHERS WITHOUT PRIOR WRITTEN PERMISSION OF THE DRAWING OWNER.

CUSTOMER: TESORO SAVAGE PETROLEUM TERMINAL LLC

PROJECT: TESORO SAVAGE VANCOUVER ENERGY DISTRIBUTION TERMINAL LLC
PORT OF VANCOUVER, WASHINGTON

DESCRIPTION: AREA 200 OFFICE & CHANGE ROOM BUILDING
PAD, PIER, & ANCHOR PLAN

DESIGN: MWD	START DATE: 09–24–13	SCALE: AS SHOWN	
DRAWN: MWD	PRINT DATE: 04–02–14	PROJECT MANAGER: DC	
CHECKED: MRD	APPROVED:	SIZE: 24x36	
DRAWING NUMBER		SHEET	REV.
0200–FD–006		1	HH

EX-0001-007568-PCE

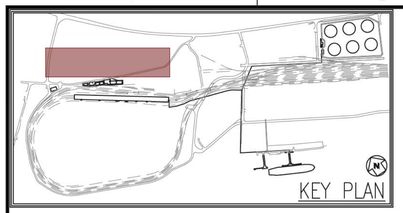

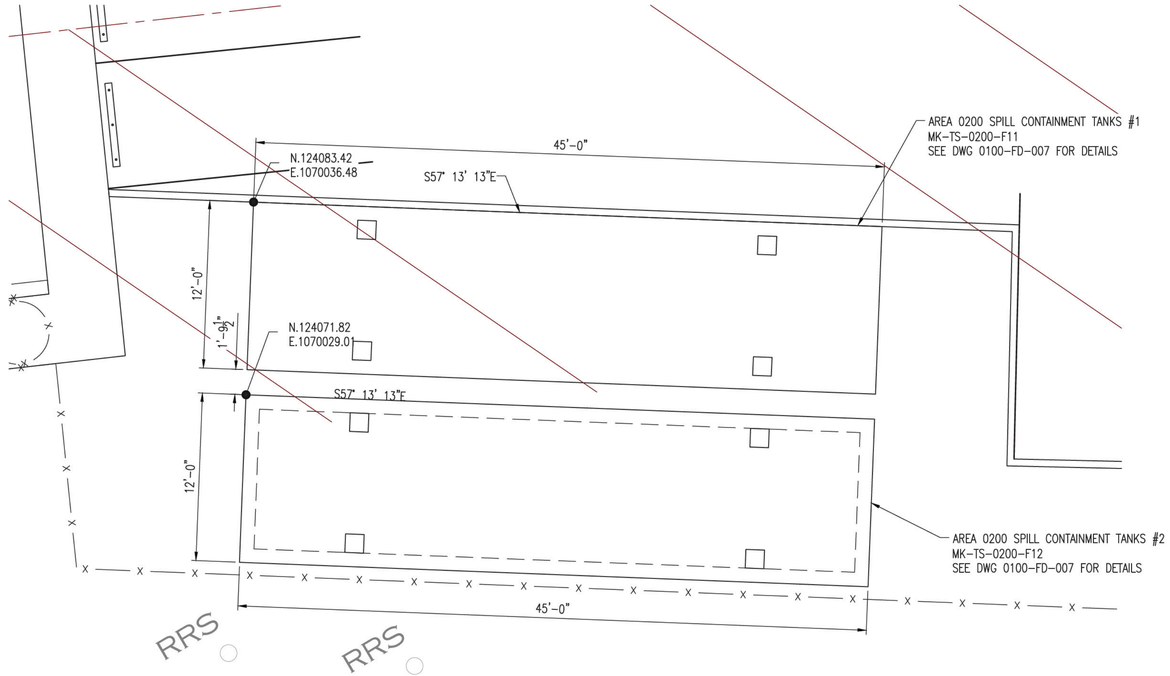

SPILL CONTAINMENT ENLARGED PLAN VIEW
N.T.S.

PRELIMINARY
NOT FOR CONSTRUCTION

13014 FOUNDATION PLOT PLAN 11-12-14

NO.	DATE	REVISION	BY	CK'D	APP
–	–	–	–	–	–
HH	11-14-14		NLB	–	–

R&M ENGINEERING CONSULTANTS
SALT LAKE CITY, UTAH
(801)263-3419

13014

THIS DRAWING CONTAINS PROPRIETARY AND PRIVILEGED INFORMATION OF TESORO SAVAGE PETROLEUM LLC AND SHALL NOT BE DISCLOSED OR USED FOR THE BENEFIT OF OTHERS WITHOUT PRIOR WRITTEN PERMISSION OF THE DRAWING OWNER.

CUSTOMER: TESORO SAVAGE PETROLEUM TERMINAL LLC

PROJECT: TESORO SAVAGE VANCOUVER ENERGY DISTRIBUTION TERMINAL LLC
PORT OF VANCOUVER, WASHINGTON

DESCRIPTION:
FOOTING & FOUNDATION PLOT PLAN
AREA 0200 SECONDARY SPILL CONTAINMENT

DESIGN:	START DATE: 07-31-13	SCALE:	1"=250'
DRAWN: NMJ	PRINT DATE:	PROJECT MANAGER:	DC
CHECKED:	APPROVED:	SIZE:	24x36

DRAWING NUMBER	SHEET	REV.
0200-FD-007	1/1	HH

EX-0001-007569-PCE

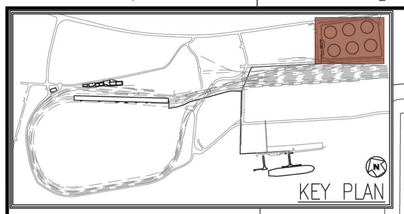

AREA 0300 TYP. CRUDE STORAGE TANK
(4) NEW
(2) FUTURE
SEE DWG 0300-FD-004 FOR DETAILS

N.122478.84
E.1074248.40

N.122321.41
E.1074572.15

N.122163.98
E.1074895.91

N.122146.34
E.1074108.96

N.121988.91
E.1074432.71

N.121831.48
E.1074756.46

0300-FD-002
0300-FD-008
0300-FD-009
0300-FD-010
0300-FD-011
0300-FD-012
0300-FD-013

NEWT

PRELIMINARY
NOT FOR CONSTRUCTION

N

PLAN
3/16" = 1'-0"

NO.	DATE	REVISION	BY	CK'D	APP
–	–	–	–	–	–
HH	11-14-14		NLB	–	–

R&M ENGINEERING CONSULTANTS
SALT LAKE CITY, UTAH
(801)263-3419

13014

THIS DRAWING CONTAINS PROPRIETARY AND PRIVILEGED INFORMATION OF TESORO SAVAGE PETROLEUM LLC AND SHALL NOT BE DISCLOSED OR USED FOR THE BENEFIT OF OTHERS WITHOUT PRIOR WRITTEN PERMISSION OF THE DRAWING OWNER.

CUSTOMER: TESORO SAVAGE PETROLEUM TERMINAL LLC

PROJECT: TESORO SAVAGE VANCOUVER ENERGY DISTRIBUTION TERMINAL LLC
PORT OF VANCOUVER, WASHINGTON

DESCRIPTION: FOOTING & FOUNDATION PLOT PLAN
AREA 0300

DESIGN:	START DATE: 07-31-13	SCALE:	AS NOTED
DRAWN: NMJ	PRINT DATE:	PROJECT MANAGER:	DC
CHECKED:	APPROVED:	SIZE:	24x36

DRAWING NUMBER	SHEET	REV.
0300-FD-001	1/1	HH

13014 FOUNDATION PLOT PLAN Area 0300 11=14-14

EX-0001-007570-PCE

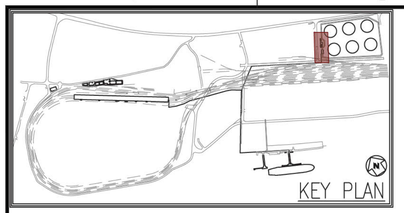

PRELIMINARY

NOT FOR CONSTRUCTION

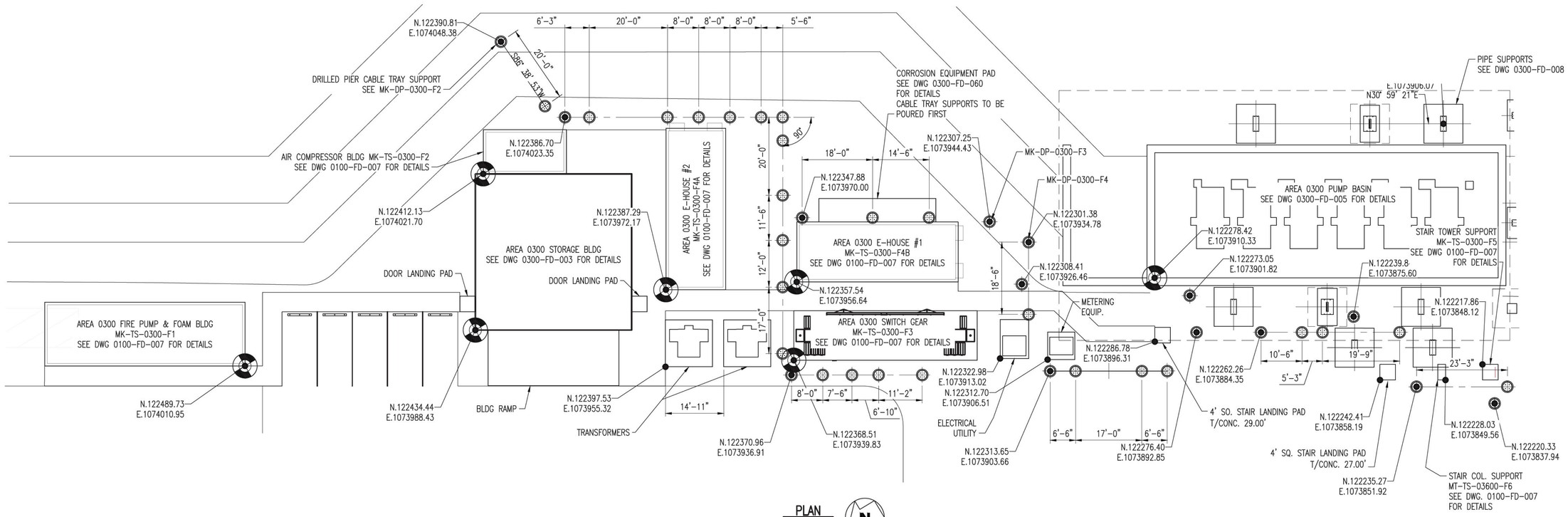

PLAN
NTS

NOTE: PIPES & CABLE TRAY NOT SHOWN FOR CLARITY.

LEGEND:

DRILLED PIER CABLE TRAY SUPPORT
MK-DP-0300-F1 (U.N.O.)
SEE DWG 0100-FD-008 FOR DETAILS

NOTES:

1. SEE DWG 0100-FD-001 FOR CONCRETE GENERAL NOTES.
2. DRILLED PIERS: SEE DWG 0100-FD-008 FOR DETAILS
3. THICKENED SLAB: SEE DWG 0100-FD- 007 FOR DETAILS

BEARING FOR ALL BUILDINGS, EQUIPMENT PADS, THICKENED SLABS & DRILLED PIER CABLE TRAY SUPPORTS ARE S59°00'39"E & N30°59'21"E (THIS DRAWING ONLY!) U.N.O.

NO.	DATE	REVISION	BY	CK'D	APP
–	–	–	–	–	–
HH	11-14-14		NLB	–	–

R&M ENGINEERING CONSULTANTS
SALT LAKE CITY, UTAH
(801)263-3419

13014

TESORO SAVAGE

THIS DRAWING CONTAINS PROPRIETARY AND PRIVILEGED INFORMATION OF TESORO SAVAGE PETROLEUM LLC AND SHALL NOT BE DISCLOSED OR USED FOR THE BENEFIT OF OTHERS WITHOUT PRIOR WRITTEN PERMISSION OF THE DRAWING OWNER.

CUSTOMER: TESORO SAVAGE PETROLEUM TERMINAL LLC

PROJECT: TESORO SAVAGE VANCOUVER ENERGY DISTRIBUTION TERMINAL LLC
PORT OF VANCOUVER, WASHINGTON

DESCRIPTION:
FOOTING & FOUNDATION PLOT PLAN
AREA 0300 PUMP BASIN, E-HOUSE, SUB-STATION & STORAGE

DESIGN:		START DATE: 07-31-13	SCALE: AS NOTED
DRAWN: NMJ		PRINT DATE:	PROJECT MANAGER: DC
CHECKED:		APPROVED:	SIZE: 24x36
DRAWING NUMBER			SHEET 1/1 REV. HH
0300-FD-002			

13014 FOUNDATION PLOT PLAN Area 0300 11on14-14

EX-0001-007571-PCE

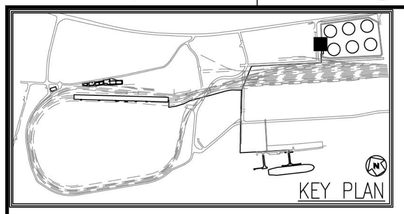

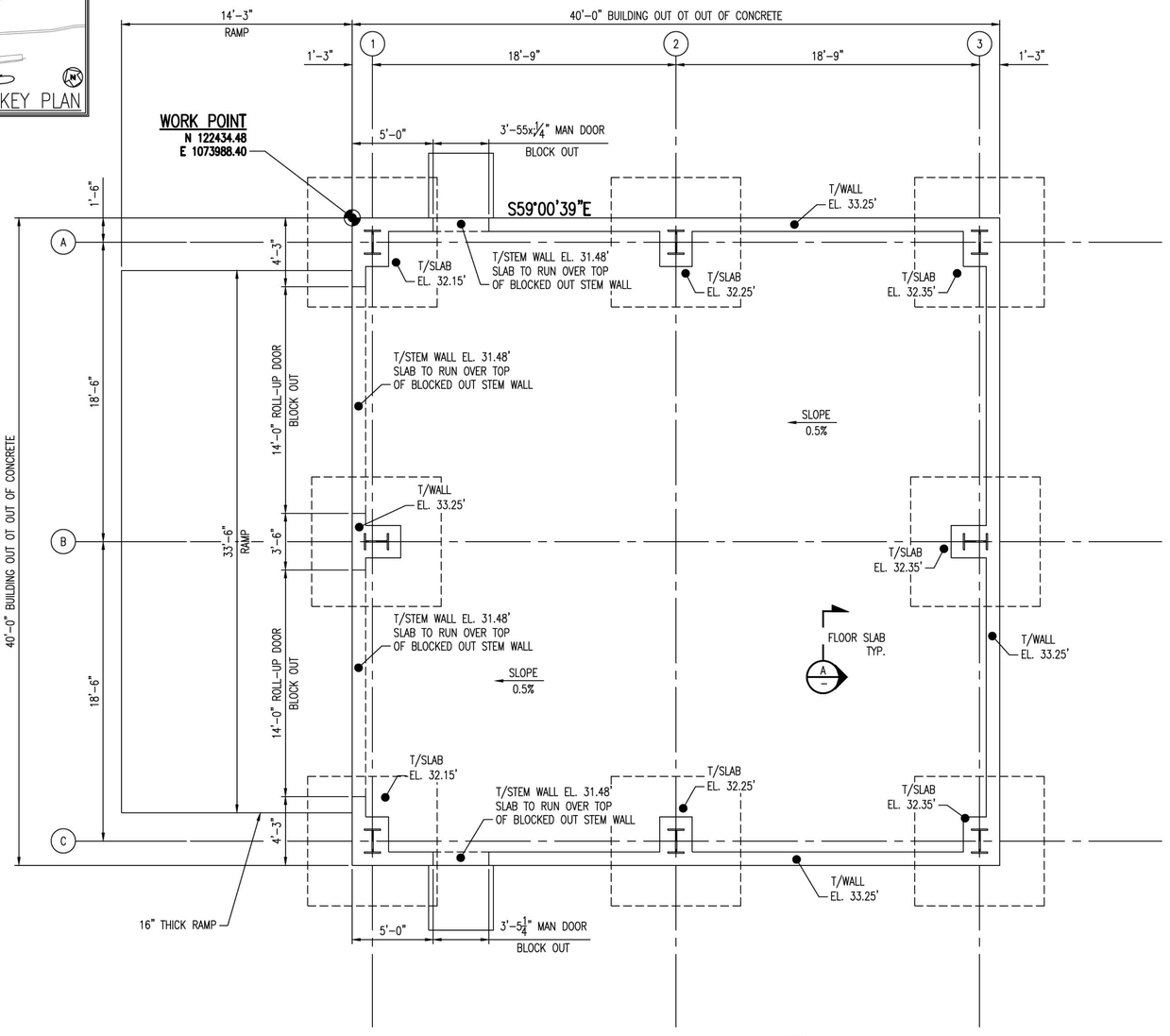

AREA 0300 STORAGE BUILDING
1/4"=1'-0"

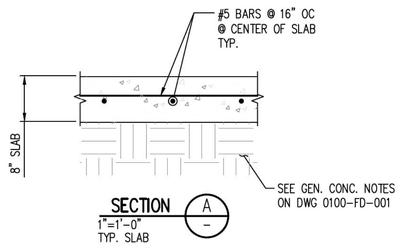

SECTION A
1"=1'-0"
TYP. SLAB
SECTION

NOTE: FLOOR SLAB SHALL HAVE CONTROL OR CONSTRUCTION JOINTS AT NO MORE THAN 16'-0" OC BOTH WAYS. SEE DETAIL 1

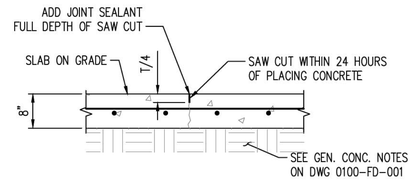

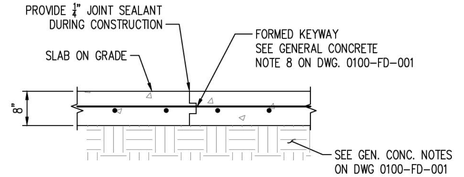

DETAIL 1
N.T.S.
TYP FLOOR SLAB
CONTROL JOINT /
CONSTRUCTION JOINT

See. Dwg 0100-FD-005	
Column Lines	Ftg. Mk
A1	MK-PB-0300-F1
A2	MK-PB-0300-F2
A3	MK-PB-0300-F1
B1	MK-PB-0300-F2
B4	MK-PB-0300-F2
C1	MK-PB-0300-F1
C2	MK-PB-0300-F2
C3	MK-PB-0300-F1

PRELIMINARY
NOT FOR CONSTRUCTION

NOTES:
1. FOR ANCHOR ROD LOCATIONS SEE STEEL BLDG DWG. BY _____.
2. FOR CONCRETE GENERAL NOTES SEE DWG 0100-FD-001.

1/4"=1'-0" 0 2' 4' 8' 12' 16'

NO.	DATE	REVISION	BY	CK'D	APP
–	–	–	–	–	–
HH	11/14/14		NLB	–	–

R&M ENGINEERING CONSULTANTS
SALT LAKE CITY, UTAH
(801)263-3419

13014

TESORO SAVAGE

THIS DRAWING CONTAINS PROPRIETARY AND PRIVILEGED INFORMATION OF TESORO SAVAGE PETROLEUM LLC AND SHALL NOT BE DISCLOSED OR USED FOR THE BENEFIT OF OTHERS WITHOUT PRIOR WRITTEN PERMISSION OF THE DRAWING OWNER.

CUSTOMER: TESORO SAVAGE PETROLEUM TERMINAL LLC

PROJECT: TESORO SAVAGE VANCOUVER ENERGY DISTRIBUTION TERMINAL LLC
PORT OF VANCOUVER, WASHINGTON

DESCRIPTION:
AREA 0300 STORAGE BUILDING
FOUNDATION PLAN VIEW

DESIGN:		START DATE: 08-15-13	SCALE: AS SHOWN
DRAWN:	JBH	PRINT DATE:	PROJECT MANAGER: DC
CHECKED:		APPROVED:	SIZE: 24x36

DRAWING NUMBER	SHEET	REV.
0300-FD-003	1/1	HH

13014 Foundations Area 0300 & 0600 11-12-14

EX-0001-007572-PCE

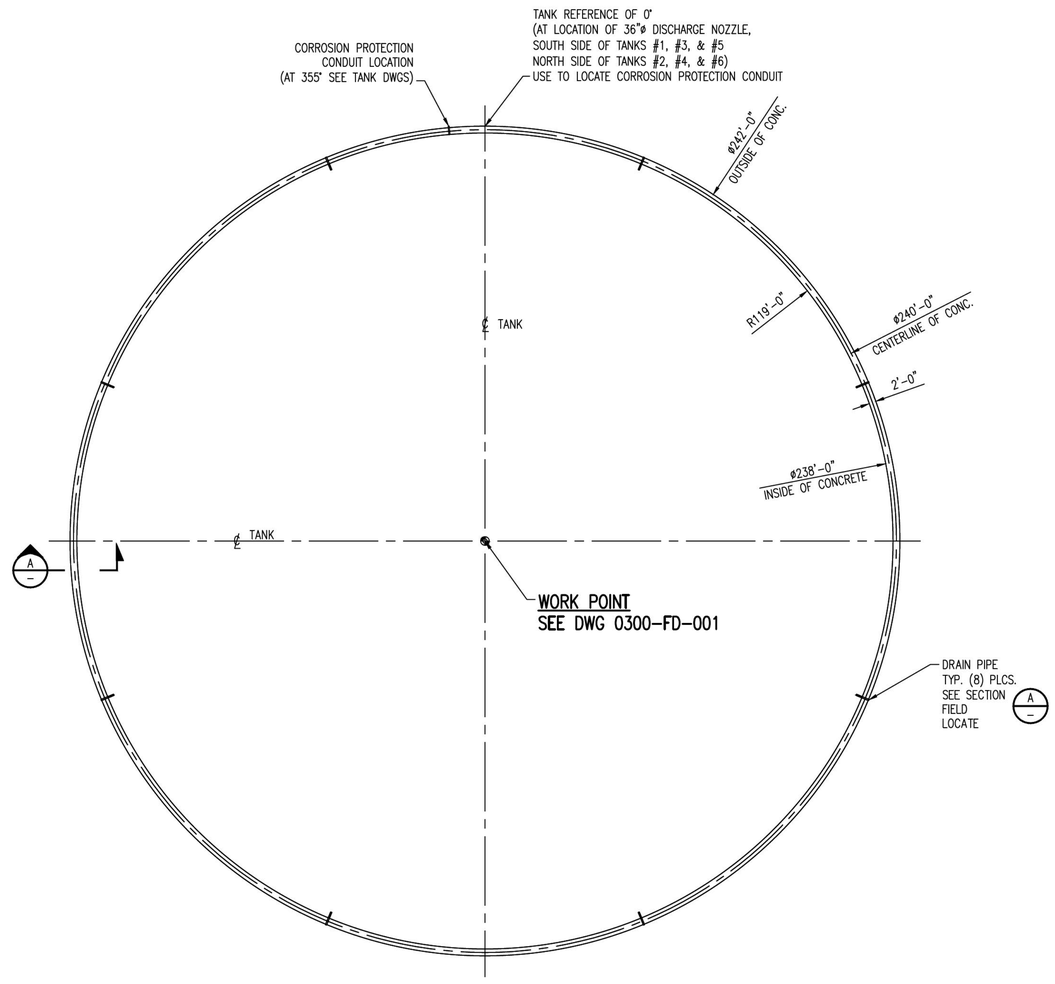

STORAGE TANK RING FOUNDATION PLAN
SCALE: 1"=20'

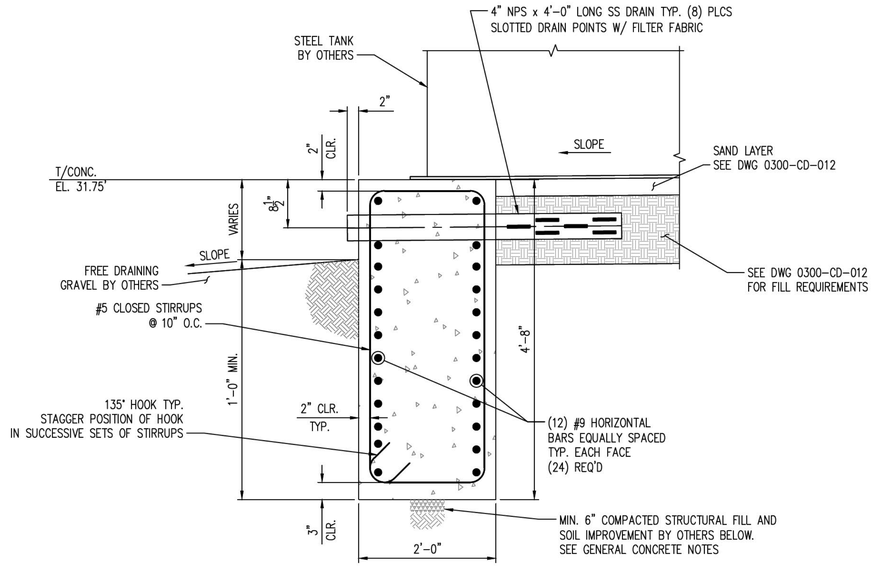

SECTION A
1"=1'-0"

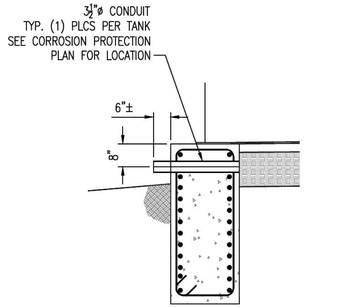

CORROSION PROTECTION CONDUIT
1/2"=1'-0"

NOTES:

1. THIS DRAWING IS FOR (1) TANK FOUNDATION. (4) TANK FOUNDATIONS ARE REQUIRED.
2. FOR TANK FOUNDATION LOCATIONS, SEE DRAWING 0300-FD-001.
3. ALL CONCRETE THIS DRAWING SHALL HAVE A MINIMUM COMPRESSIVE STRENGTH OF 4,000 PSI.
4. FOR CONCRETE GENERAL NOTES SEE DWG 0100-FD-001.

1"=1'-0" 0 6" 1' 2' 3' 4'

1"=20' 0 10' 20' 40' 60' 80'

PRELIMINARY
NOT FOR CONSTRUCTION

NO.	DATE	REVISION	BY	CK'D	APP
–	–	–	–	–	–
HH	11/14/14		NLB	–	–

R&M ENGINEERING CONSULTANTS
SALT LAKE CITY, UTAH
(801)263-3419
13014

TESORO SAVAGE

THIS DRAWING CONTAINS PROPRIETARY AND PRIVILEGED INFORMATION OF TESORO SAVAGE PETROLEUM LLC AND SHALL NOT BE DISCLOSED OR USED FOR THE BENEFIT OF OTHERS WITHOUT PRIOR WRITTEN PERMISSION OF THE DRAWING OWNER.

CUSTOMER: TESORO SAVAGE PETROLEUM TERMINAL LLC

PROJECT: TESORO SAVAGE VANCOUVER ENERGY DISTRIBUTION TERMINAL LLC
PORT OF VANCOUVER, WASHINGTON

DESCRIPTION: AREA 0300 STORAGE TANK FOUNDATION

DESIGN: MRD	START DATE: 09-04-13	SCALE:	AS SHOWN
DRAWN: MRD	PRINT DATE:	PROJECT MANAGER:	DC
CHECKED:	APPROVED:	SIZE:	24x36
DRAWING NUMBER		SHEET	REV.
0300-FD-004		1/1	HH

13014 Foundations Area 0300 & 0600 11-12-14

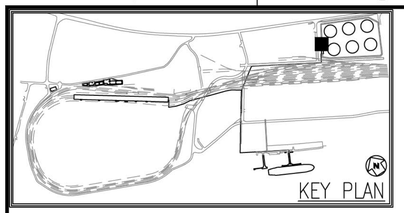

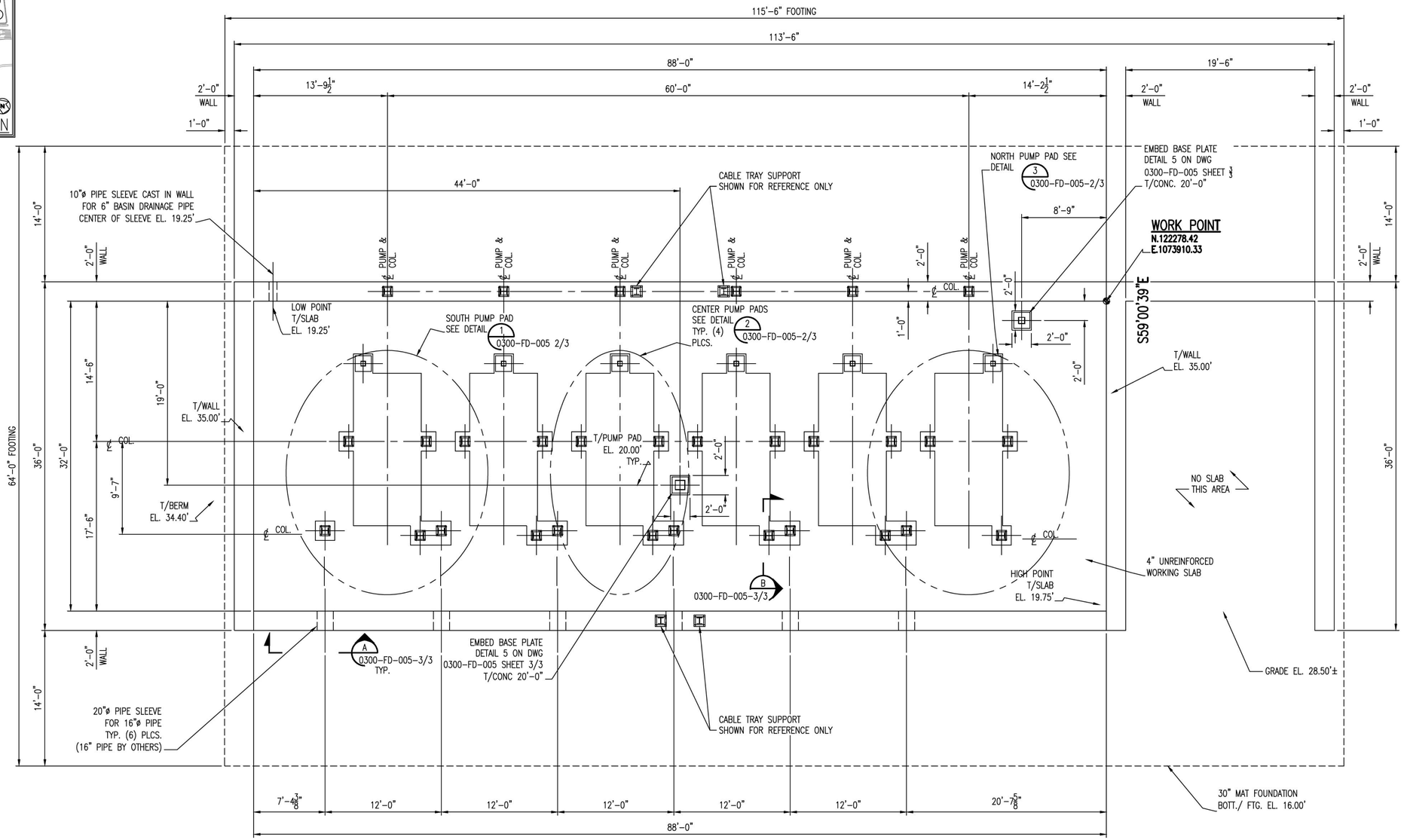

PRELIMINARY
NOT FOR CONSTRUCTION

NOTES:
1. FOR ANCHOR ROD LOCATIONS SEE PUMP EQUIPMENT DWG. BY _____.
2. FOR CONCRETE GENERAL NOTES SEE DWG 0100-FD-001.

1"=1'-0" 0 6" 1' 2' 3' 4'

3/16"=1'-0" 0 2' 4' 8' 12' 16' 20'

PUMP BASIN PLAN VIEW
3/16"=1'-0"

N

NO.	DATE	REVISION	BY	CK'D	APP
–	–	–	–	–	–
HH	11/14/14		NLB	–	–

R&M ENGINEERING CONSULTANTS
SALT LAKE CITY, UTAH
(801)263-3419
13014

TESORO SAVAGE

THIS DRAWING CONTAINS PROPRIETARY AND PRIVILEGED INFORMATION OF TESORO SAVAGE PETROLEUM LLC AND SHALL NOT BE DISCLOSED OR USED FOR THE BENEFIT OF OTHERS WITHOUT PRIOR WRITTEN PERMISSION OF THE DRAWING OWNER.

CUSTOMER: TESORO SAVAGE PETROLEUM TERMINAL LLC

PROJECT: TESORO SAVAGE VANCOUVER ENERGY DISTRIBUTION TERMINAL LLC
PORT OF VANCOUVER, WASHINGTON

DESCRIPTION:
AREA 0300 PUMP BASIN
FOUNDATION DETAILS

DESIGN: MWD	START DATE: 10-04-13	SCALE:	AS SHOWN
DRAWN: MWD	PRINT DATE:	PROJECT MANAGER:	DC
CHECKED: MRD	APPROVED:	SIZE:	24x36

DRAWING NUMBER	SHEET	REV.
0300-FD-005	1/3	HH

13014 Foundations Area 0300 & 0600 11-12-14

EX-0001-007574-PCE

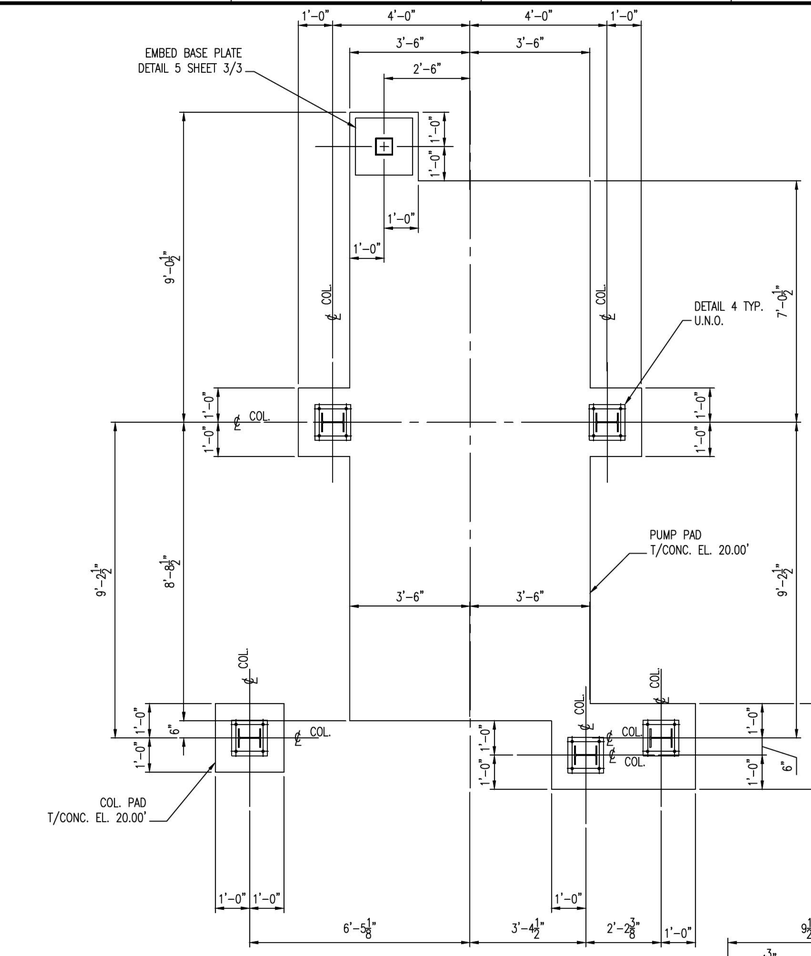

NOTES:

1. FOR ANCHOR ROD LOCATIONS SEE PUMP EQUIPMENT DWG. BY _____.
2. FOR CONCRETE GENERAL NOTES SEE DWG 0100-FD-001.
3. FOR ANCHOR ROD SCEDAUL SEE DWG 0100-FD-001.

DETAIL 1 — 0300-FD-005-1/3
1/2"=1'-0"
SOUTH PUMP PAD

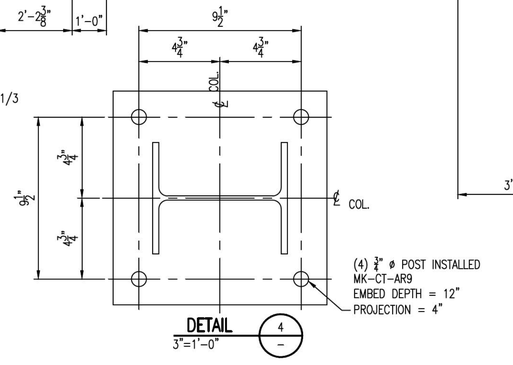

DETAIL 4 — —
3"=1'-0"

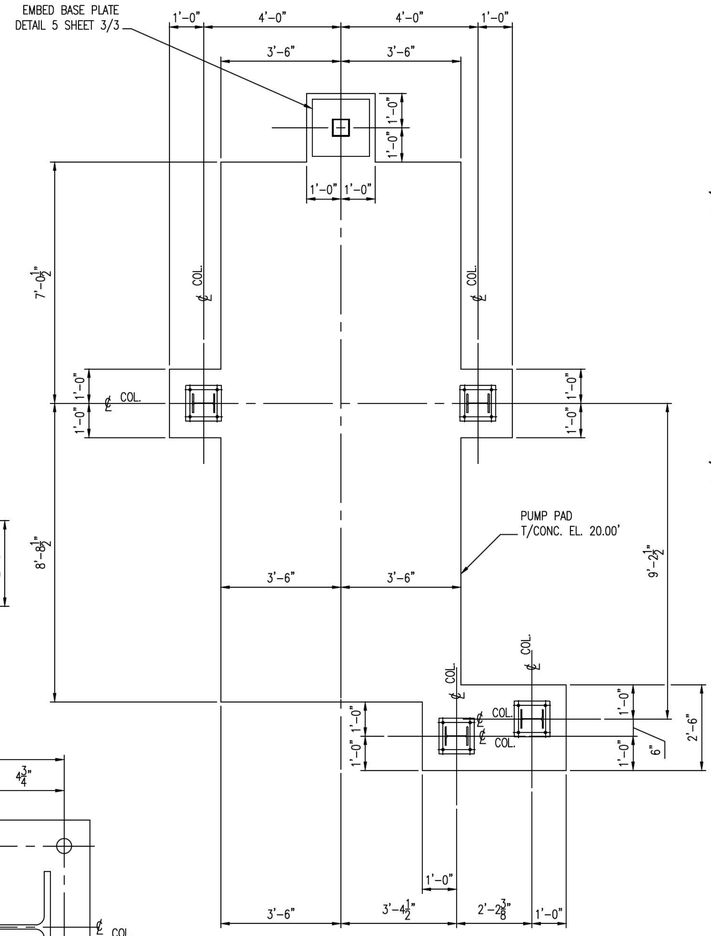

DETAIL 2 — 0300-FD-005-1/3
1/2"=1'-0"
CENTER PUMP PAD
TYP. (4) PLCS.

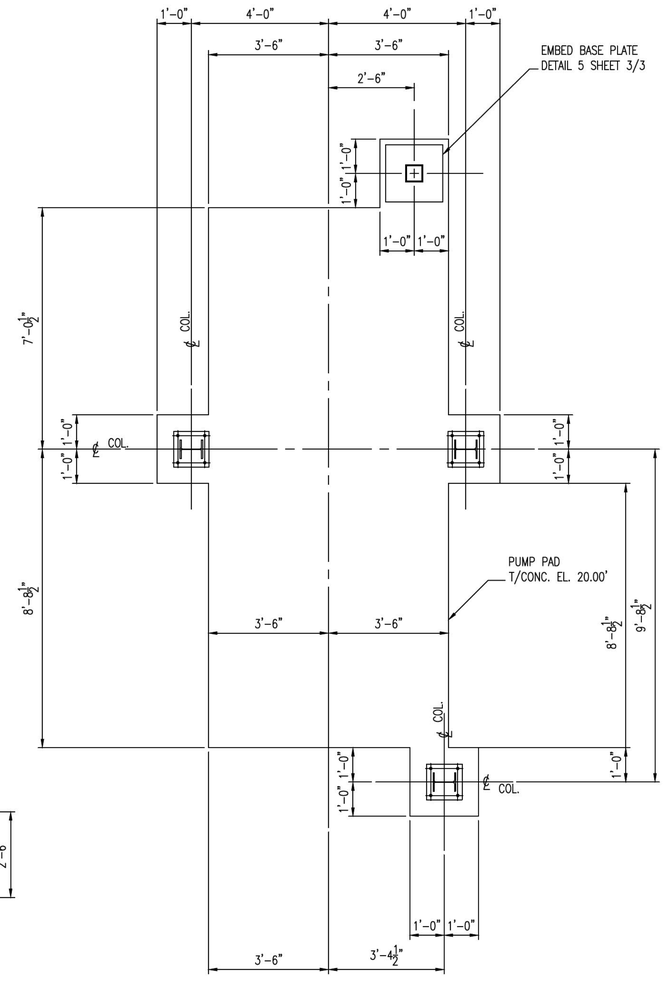

DETAIL 3 — 0300-FD-005-1/3
1/2"=1'-0"
NORTH PUMP PAD

PRELIMINARY
NOT FOR CONSTRUCTION

1/2"=1'-0" 0 1' 2' 4' 6' 8'

NO.	DATE	REVISION	BY	CK'D	APP
–	–	–	–	–	–
HH	11/14/14		NLB	–	–

13014 Foundations Area 0300 & 0600 11-12-14

R&M ENGINEERING CONSULTANTS
SALT LAKE CITY, UTAH
(801)263-3419
13014

TESORO SAVAGE

THIS DRAWING CONTAINS PROPRIETARY AND PRIVILEGED INFORMATION OF TESORO SAVAGE PETROLEUM LLC AND SHALL NOT BE DISCLOSED OR USED FOR THE BENEFIT OF OTHERS WITHOUT PRIOR WRITTEN PERMISSION OF THE DRAWING OWNER.

CUSTOMER: TESORO SAVAGE PETROLEUM TERMINAL LLC

PROJECT: TESORO SAVAGE VANCOUVER ENERGY DISTRIBUTION TERMINAL LLC
PORT OF VANCOUVER, WASHINGTON

DESCRIPTION:
AREA 0300 PUMP BASIN
FOUNDATION DETAILS

DESIGN: MWD	START DATE: 10-04-13	SCALE:	AS SHOWN
DRAWN: MWD	PRINT DATE:	PROJECT MANAGER:	DC
CHECKED: MRD	APPROVED:	SIZE:	24x36
DRAWING NUMBER		SHEET	REV.
0300-FD-005		2/3	HH

EX-0001-007575-PCE

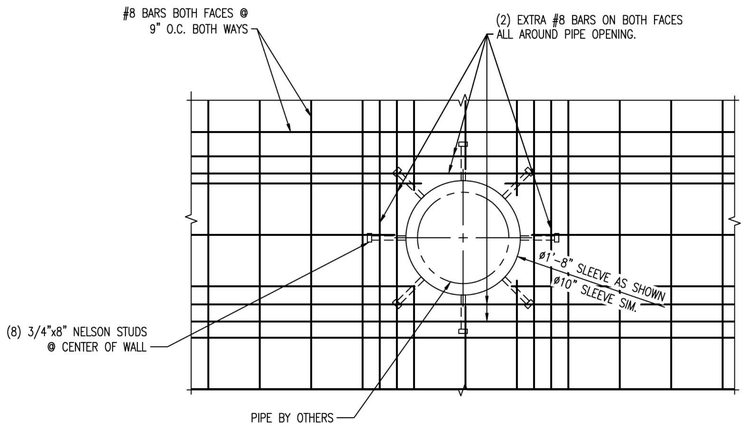

SECTION A — 1"=1'-0" — 0300-FD-005-1/3

TYP. PIPE SLEEVE DETAIL

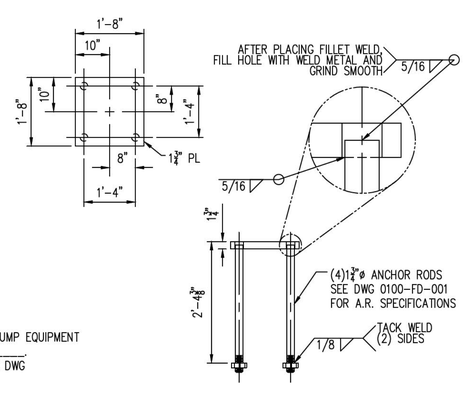

EMBED PLATE
1/2"=1'-0"

DETAIL 5 — 0300-FD-005-2/3

NOTES:
1. FOR ANCHOR ROD LOCATIONS SEE PUMP EQUIPMENT DWG. BY _____.
2. FOR CONCRETE GENERAL NOTES SEE DWG 0100-FD-001.

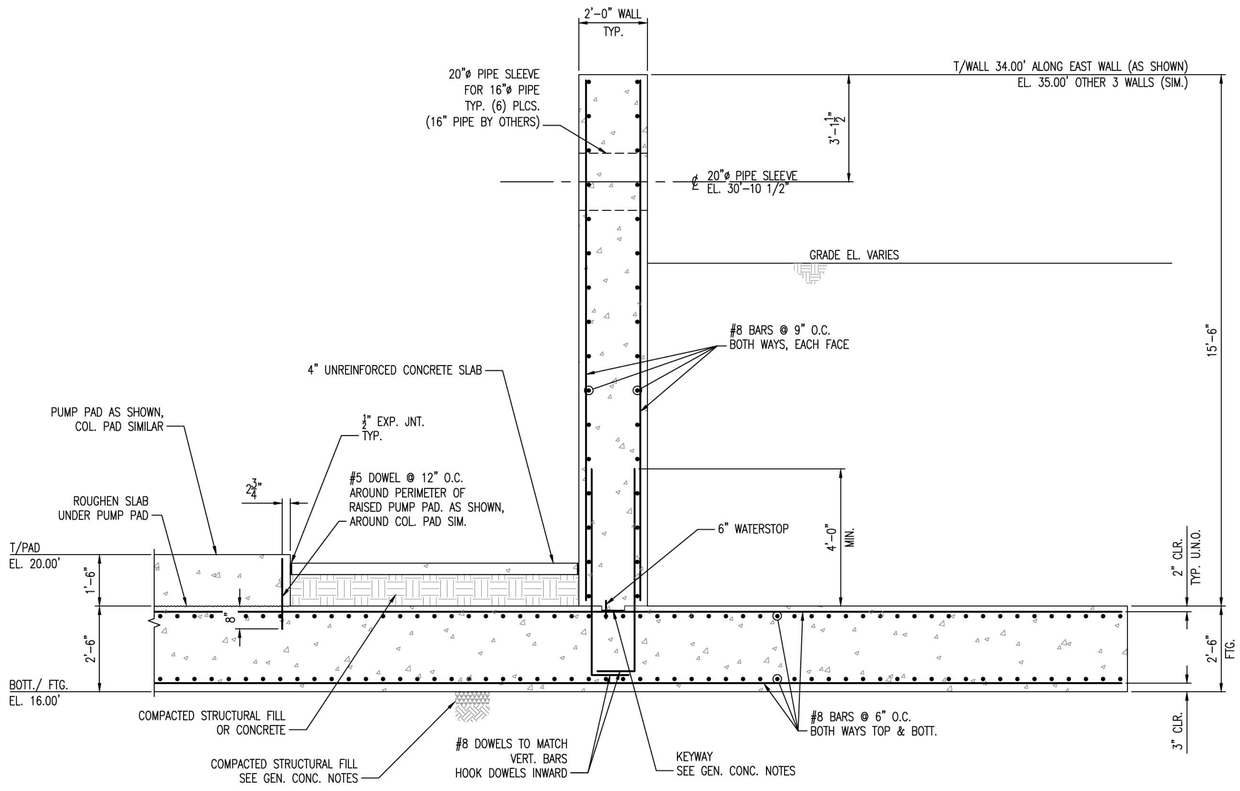

SECTION B — 1/2"=1'-0" — 0300-FD-005-1/3

PRELIMINARY
NOT FOR CONSTRUCTION

1"=1'-0": 0 6" 1' 2' 3' 4'
1/2"=1'-0": 0 1' 2' 4' 6' 8'

NO.	DATE	REVISION	BY	CK'D	APP
–	–	–	–	–	–
HH	11/14/14		NLB	–	–

R&M ENGINEERING CONSULTANTS
SALT LAKE CITY, UTAH
(801)263-3419
13014

TESORO SAVAGE

THIS DRAWING CONTAINS PROPRIETARY AND PRIVILEGED INFORMATION OF TESORO SAVAGE PETROLEUM LLC AND SHALL NOT BE DISCLOSED OR USED FOR THE BENEFIT OF OTHERS WITHOUT PRIOR WRITTEN PERMISSION OF THE DRAWING OWNER.

CUSTOMER: TESORO SAVAGE PETROLEUM TERMINAL LLC

PROJECT: TESORO SAVAGE VANCOUVER ENERGY DISTRIBUTION TERMINAL LLC
PORT OF VANCOUVER, WASHINGTON

DESCRIPTION: AREA 0300 PUMP BASIN FOUNDATION DETAILS

DESIGN:	MWD	START DATE:	10-04-13	SCALE:	AS SHOWN
DRAWN:	MWD	PRINT DATE:		PROJECT MANAGER:	DC
CHECKED:	MRD	APPROVED:		SIZE:	24x36

DRAWING NUMBER	SHEET	REV.
0300-FD-005	3/3	HH

13014 Foundations Area 0300 & 0600 11-12-14

EX-0001-007576-PCE

KEY PLAN

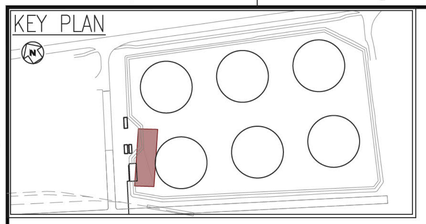

PIPE/CABLE TRAY SUPPORT TABLE
FOR DETAILS SEE DWG 0300-FD-015 U.N.O.

Support Number	B/Pipe		T/Conc.	B/Conc. Ftg.	Ftg Mark #
PS 810	29.38'		28.79'	25.79'	MK-PS-0300-F12
PS 812	29.38'		28.79'	25.79'	MK-PS-0300-F1
PS 814	29.38'		28.79'	25.79'	MK-PS-0300-F16
PS 816	29.38'		28.79'	25.79'	MK-PS-0300-F8
PS 818	29.38'		28.79'	25.79'	MK-PS-0300-F16
PS 820	29.38'		28.79'	18.04'	MK-PS-0300-F5
PS 822	29.38'		28.79'	25.79'	MK-PS-0300-F16
PS 824	29.38'		28.79'	25.79'	MK-PS-0300-F8
PS 825	--		28.79'	25.79'	MK-PS-0300-F7
PS 826	29.38'		28.79'	25.79'	MK-PS-0300-F10
PS 827	--		28.79'	25.79'	MK-PS-0300-F11
PS 1001	29.38'		28.79'	25.79'	MK-PS-0300-F1
PS 1002	29.38'		28.79'	18.04'	MK-PS-0300-F6
PS 1003	29.38'		28.79'	25.79'	MK-PS-0300-F1

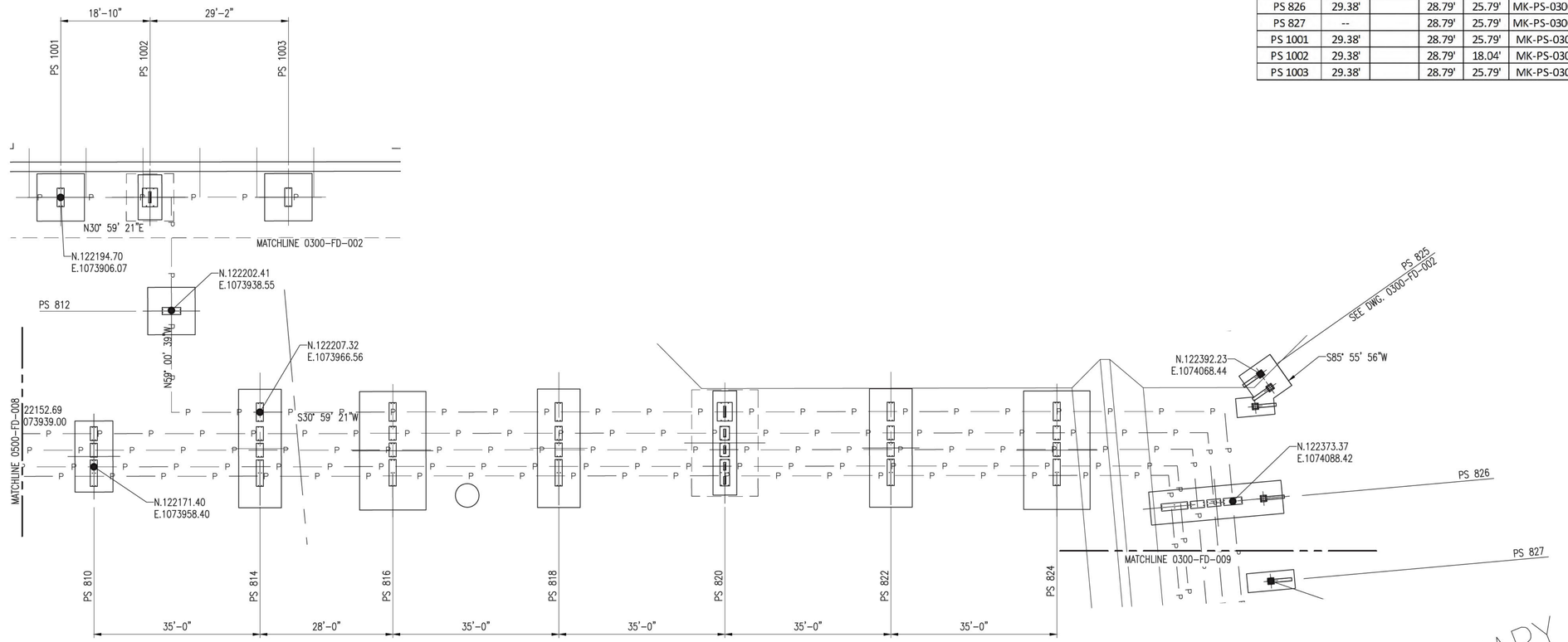

PLAN
3/16" = 1'-0"

PRELIMINARY
NOT FOR CONSTRUCTION

NO.	DATE	REVISION	BY	CK'D	APP
–	–	–	–	–	–
HH	11-14-14		NLB	–	–

R&M ENGINEERING CONSULTANTS
SALT LAKE CITY, UTAH
(801)263-3419

13014

TESORO SAVAGE

THIS DRAWING CONTAINS PROPRIETARY AND PRIVILEGED INFORMATION OF TESORO SAVAGE PETROLEUM LLC AND SHALL NOT BE DISCLOSED OR USED FOR THE BENEFIT OF OTHERS WITHOUT PRIOR WRITTEN PERMISSION OF THE DRAWING OWNER.

CUSTOMER: TESORO SAVAGE PETROLEUM TERMINAL LLC

PROJECT: TESORO SAVAGE VANCOUVER ENERGY DISTRIBUTION TERMINAL LLC
PORT OF VANCOUVER, WASHINGTON

DESCRIPTION:
FOOTING & FOUNDATION PLOT PLAN
AREA 0300

DESIGN:	START DATE: 07-31-13	SCALE:	AS NOTED
DRAWN: NMJ	PRINT DATE:	PROJECT MANAGER:	DC
CHECKED:	APPROVED:	SIZE:	24x36
DRAWING NUMBER		SHEET	REV.
0300-FD-008		1/1	HH

13014 FOUNDATION PLOT PLAN Area 0300 11=14-14

EX-0001-007577-PCE

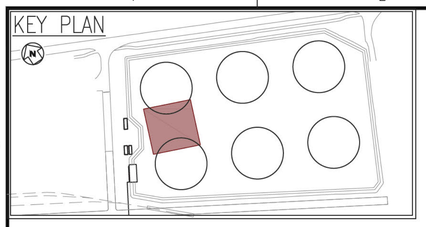

BEARING FOR ALL PIPE SUPPORTS & CABLE TRAY SUPPORTS ARE S64°04'02"E OR PERPENDICULAR (THIS DRAWING) U.N.O.

PIPE/CABLE TRAY SUPPORT TABLE
FOR DETAILS SEE DWG 0300-FD-015 U.N.O.

Support Number	B/Pipe		T/Conc.	B/Conc. Ftg.	Ftg Mark #
PS 826	Reference only				
PS 827					
PS 828	29.38'		28.79'	25.79'	MK-PS-0300-F25
PS 829	--		28.79'	25.79'	MK-PS-0300-F18
PS 830	29.38'		28.79'	25.79'	MK-PS-0300-F29
PS 831	--		28.79'	25.79'	MK-PS-0300-F19
PS 832	32.94'		32.35'	26.19'	MK-PS-0300-F2
PS 833	32.94'		32.35'	26.19'	MK-PS-0300-F26
PS 834	32.94'		32.35'	26.19'	MK-PS-0300-F17
PS 836	29.38'		28.79'	18.04'	MK-PS-0300-F4
PS 836B	--		28.79'	25.79'	MK-PS-0300-F20
PS 836C	--		28.79'	25.79'	MK-PS-0300-F38
PS 836D	--		28.79'	25.79'	MK-PS-0300-F38
PS 836E	--		28.79'	25.79'	MK-PS-0300-F38
PS 836F	--		28.79'	25.79'	MK-PS-0300-F38
PS 836G	--		28.79'	25.79'	MK-PS-0300-F38
PS 836H	--		28.79'	25.79'	MK-PS-0300-F38
PS 837	--		28.79'	25.79'	MK-PS-0300-F11
PS 838	29.38'		28.79'	25.79'	MK-PS-0300-F10
PS 840	32.94'		32.35'	26.19'	MK-PS-0300-F3
PS 841	32.94'		32.35'	26.19'	MK-PS-0300-F2
PS 841B	32.94'		32.35'	26.19'	MK-PS-0300-F26
PS 842	32.94'		32.35'	26.19'	MK-PS-0300-F17
PS 843	--		32.35'	29.35'	MK-PS-0300-F11
PS 844	29.38'		28.79'	25.79'	MK-PS-0300-F25

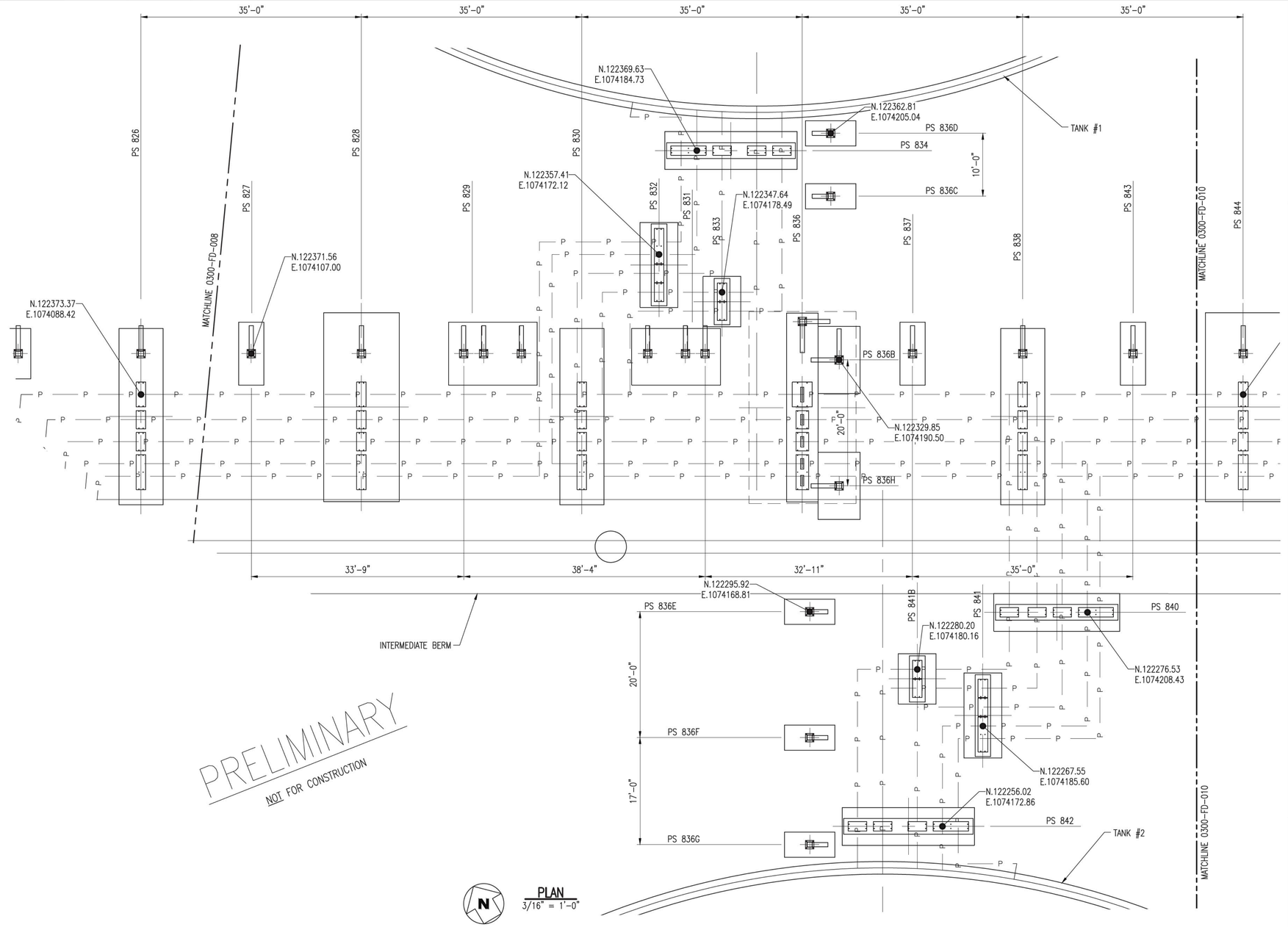

NO.	DATE	REVISION	BY	CK'D	APP
–	–	–	–	–	–
HH	11-14-14		NLB	–	–

R&M ENGINEERING CONSULTANTS
SALT LAKE CITY, UTAH
(801)263-3419

13014

TESORO SAVAGE

THIS DRAWING CONTAINS PROPRIETARY AND PRIVILEGED INFORMATION OF TESORO SAVAGE PETROLEUM LLC AND SHALL NOT BE DISCLOSED OR USED FOR THE BENEFIT OF OTHERS WITHOUT PRIOR WRITTEN PERMISSION OF THE DRAWING OWNER.

CUSTOMER: TESORO SAVAGE PETROLEUM TERMINAL LLC

PROJECT: TESORO SAVAGE VANCOUVER ENERGY DISTRIBUTION TERMINAL LLC
PORT OF VANCOUVER, WASHINGTON

DESCRIPTION: FOOTING & FOUNDATION PLOT PLAN
AREA 0300

DESIGN:	START DATE: 07-31-13	SCALE:	AS NOTED
DRAWN: NMJ	PRINT DATE:	PROJECT MANAGER:	DC
CHECKED:	APPROVED:	SIZE:	24x36
DRAWING NUMBER		SHEET	REV.
0300-FD-009		1/1	HH

13014 FOUNDATION PLOT PLAN Area 0300 11=14-14

EX-0001-007578-PCE

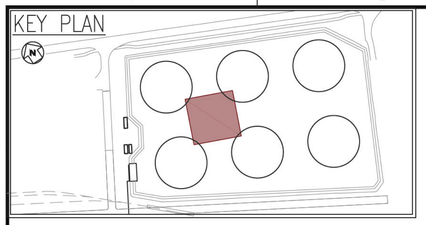

PRELIMINARY

NOT FOR CONSTRUCTION

BEARING FOR ALL PIPE SUPPORTS & CABLE TRAY SUPPORTS ARE S64°04'02"E OR PERPENDICULAR (THIS DRAWING) U.N.O.

PIPE/CABLE TRAY SUPPORT TABLE
FOR DETAILS SEE DWG 0300-FD-015 U.N.O.

Support Number	B/Pipe		T/Conc.	B/Conc. Ftg.	Ftg Mark #
PS 843	Reference Only				
PS 844					
PS 845			28.79'	25.79'	MK-PS-0300-F11
PS 846	29.38'		28.79'	25.79'	MK-PS-0300-F30
PS 848	29.38'		28.79'	25.79'	MK-PS-0300-F13
PS 850	29.38'		28.79'	25.79'	MK-PS-0300-F31
PS 852	29.38'		28.79'	25.79'	MK-PS-0300-F32
PS 854	29.38'		28.79'	25.79'	MK-PS-0300-F10
PS 855			28.79'	25.79'	MK-PS-0300-F11
PS 856	29.38'		28.79'	25.79'	MK-PS-0300-F25
PS 859			28.79'	25.79'	MK-PS-0300-F11

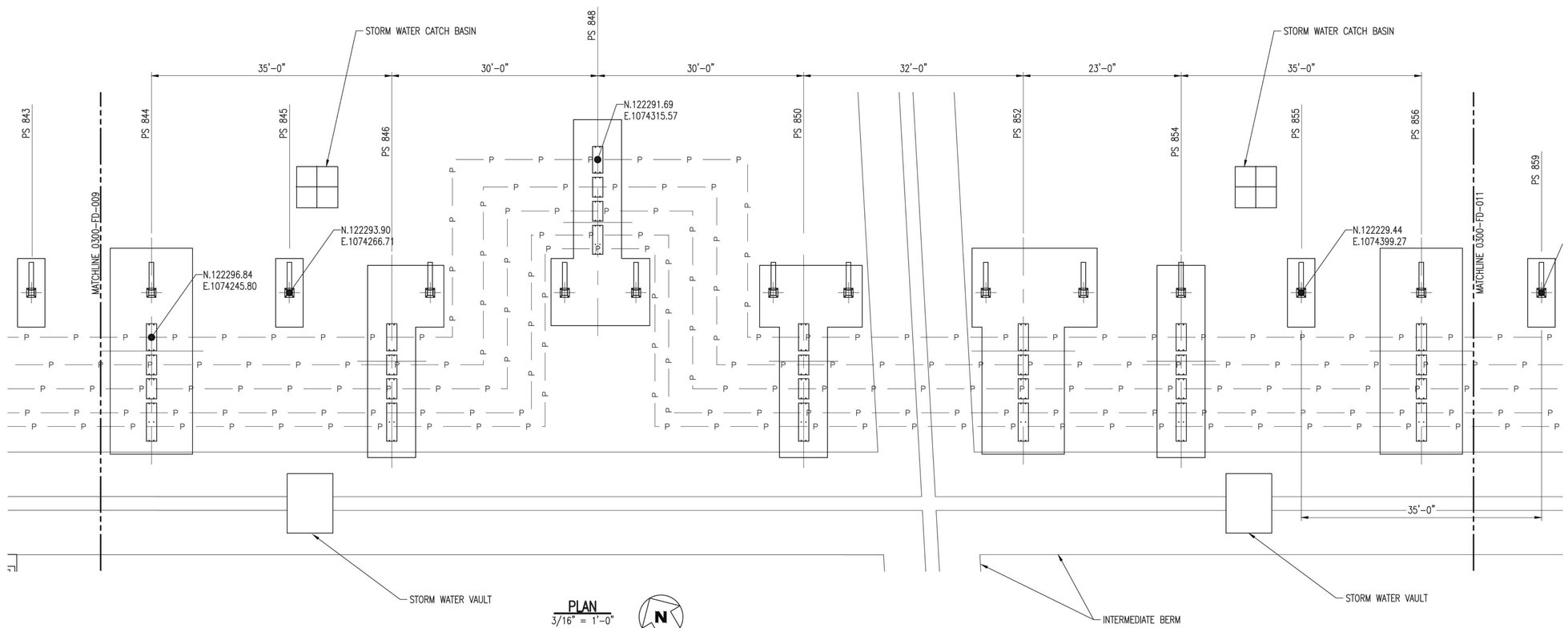

PLAN
3/16" = 1'-0"

N

NO.	DATE	REVISION	BY	CK'D	APP
–	–	–	–	–	–
HH	11–14–14		NLB	–	–

R&M ENGINEERING CONSULTANTS
SALT LAKE CITY, UTAH
(801)263-3419

13014

TESORO SAVAGE

THIS DRAWING CONTAINS PROPRIETARY AND PRIVILEGED INFORMATION OF TESORO SAVAGE PETROLEUM LLC AND SHALL NOT BE DISCLOSED OR USED FOR THE BENEFIT OF OTHERS WITHOUT PRIOR WRITTEN PERMISSION OF THE DRAWING OWNER.

CUSTOMER: TESORO SAVAGE PETROLEUM TERMINAL LLC

PROJECT: TESORO SAVAGE VANCOUVER ENERGY DISTRIBUTION TERMINAL LLC
PORT OF VANCOUVER, WASHINGTON

DESCRIPTION: FOOTING & FOUNDATION PLOT PLAN AREA 0300

DESIGN:	START DATE: 07–31–13	SCALE:	AS NOTED
DRAWN: NMJ	PRINT DATE:	PROJECT MANAGER:	DC
CHECKED:	APPROVED:	SIZE:	24x36

DRAWING NUMBER	SHEET	REV.
0300–FD–010	1/1	HH

13014 FOUNDATION PLOT PLAN Area 0300 11=14-14

EX-0001-007579-PCE

KEY PLAN

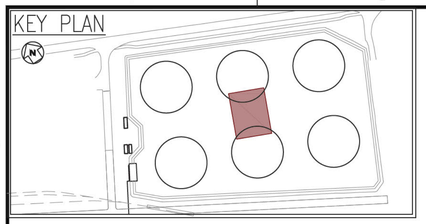

BEARING FOR ALL PIPE SUPPORTS & CABLE TRAY SUPPORTS ARE S64°04'02"E OR PERPENDICULAR (THIS DRAWING) U.N.O.

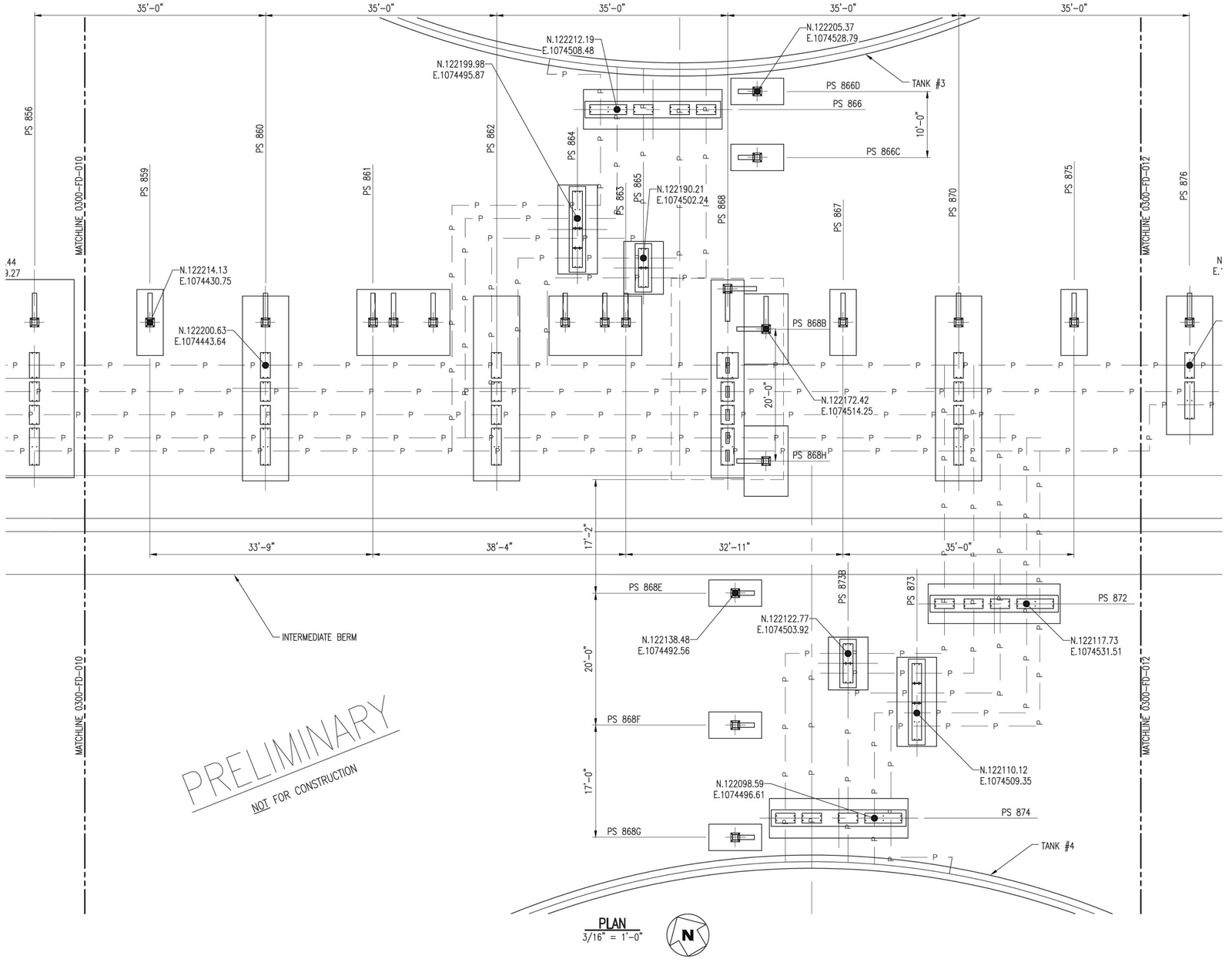

PRELIMINARY

NOT FOR CONSTRUCTION

PLAN
3/16" = 1'-0"

PIPE/CABLE TRAY SUPPORT TABLE
FOR DETAILS SEE DWG 0300-FD-015 U.N.O.

Support Number	B/Pipe		T/Conc.	B/Conc. Ftg.	Ftg Mark #
PS 856	Reference Only				
PS 859					
PS 860	29.38'		28.79'	25.79'	MK-PS-0300-F10
PS 861	--		28.79'	25.79'	MK-PS-0300-F18
PS 862	29.38'		28.79'	25.79'	MK-PS-0300-F29
PS 863	--		28.79'	25.79'	MK-PS-0300-F19
PS 864	32.94'		32.35'	26.19'	MK-PS-0300-F2
PS 865	32.94'		32.35'	26.19'	MK-PS-0300-F26
PS 866	32.94'		32.35'	26.19'	MK-PS-0300-F17
PS 867	--		28.79'	25.79'	MK-PS-0300-F11
PS 868	29.38'		28.79'	18.04'	MK-PS-0300-F4
PS 868B	--		28.79'	25.79'	MK-PS-0300-F20
PS 868C	--		28.79'	25.79'	MK-PS-0300-F38
PS 868D	--		28.79'	25.79'	MK-PS-0300-F38
PS 868E	--		28.79'	25.79'	MK-PS-0300-F38
PS 868F	--		28.79'	25.79'	MK-PS-0300-F38
PS 868G	--		28.79'	25.79'	MK-PS-0300-F38
PS 868H	--		28.79'	25.79'	MK-PS-0300-F38
PS 870	29.38'		28.79'	25.79'	MK-PS-0300-F10
PS 872	32.94'		32.35'	26.19'	MK-PS-0300-F3
PS 873	32.94'		32.35'	26.19'	MK-PS-0300-F2
PS 873B	32.94'		32.35'	26.19'	MK-PS-0300-F26
PS 874	32.94'		32.35'	26.19'	MK-PS-0300-F17
PS 875	--		28.79'	25.79'	MK-PS-0300-F11
PS 876	29.38'		28.79'	25.79'	MK-PS-0300-F14

NO.	DATE	REVISION	BY	CK'D	APP
–	–	–	–	–	–
HH	11-14-14		NLB	–	–

R&M ENGINEERING CONSULTANTS
SALT LAKE CITY, UTAH
(801)263-3419

13014

TESORO SAVAGE

THIS DRAWING CONTAINS PROPRIETARY AND PRIVILEGED INFORMATION OF TESORO SAVAGE PETROLEUM LLC AND SHALL NOT BE DISCLOSED OR USED FOR THE BENEFIT OF OTHERS WITHOUT PRIOR WRITTEN PERMISSION OF THE DRAWING OWNER.

CUSTOMER: TESORO SAVAGE PETROLEUM TERMINAL LLC

PROJECT: TESORO SAVAGE VANCOUVER ENERGY DISTRIBUTION TERMINAL LLC
PORT OF VANCOUVER, WASHINGTON

DESCRIPTION: FOOTING & FOUNDATION PLOT PLAN
AREA 0300

DESIGN:	START DATE: 07-31-13	SCALE:	AS NOTED
DRAWN: NMJ	PRINT DATE:	PROJECT MANAGER:	DC
CHECKED:	APPROVED:	SIZE:	24x36
DRAWING NUMBER		SHEET	REV.
0300-FD-011		1/1	HH

13014 FOUNDATION PLOT PLAN Area 0300 11=14-14

EX-0001-007580-PCE

KEY PLAN

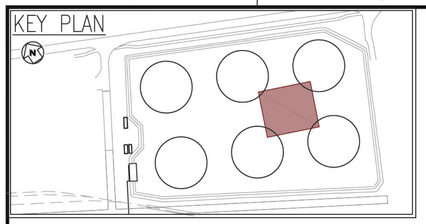

BEARING FOR ALL PIPE SUPPORTS & CABLE TRAY SUPPORTS ARE S64°04'02"E OR PERPENDICULAR (THIS DRAWING) U.N.O.

PIPE/CABLE TRAY SUPPORT TABLE
FOR DETAILS SEE DWG 0300-FD-015 U.N.O.

Support Number	B/Pipe		T/Conc.	B/Conc. Ftg.	Ftg Mark #
PS 875	Reference Only				
PS 876					
PS 877			28.79'	25.79'	MK-PS-0300-F11
PS 878	29.38'		28.79'	25.79'	MK-PS-0300-F14
PS 879			28.79'	25.79'	MK-PS-0300-F11
PS 880	29.38'		28.79'	25.79'	MK-PS-0300-F14
PS 881			28.79'	25.79'	MK-PS-0300-F11
PS 882	29.38'		28.79'	25.79'	MK-PS-0300-F24
PS 884	29.38'		28.79'	25.79'	MK-PS-0300-F36
PS 886	29.38'		28.79'	25.79'	MK-PS-0300-F15
PS 887			28.79'	25.79'	MK-PS-0300-F22
PS 888	29.38'		28.79'	25.79'	MK-PS-0300-F14
PS 889			28.79'	25.79'	MK-PS-0300-F11
PS 890	29.38'		28.79'	25.79'	MK-PS-0300-F34

PRELIMINARY
NOT FOR CONSTRUCTION

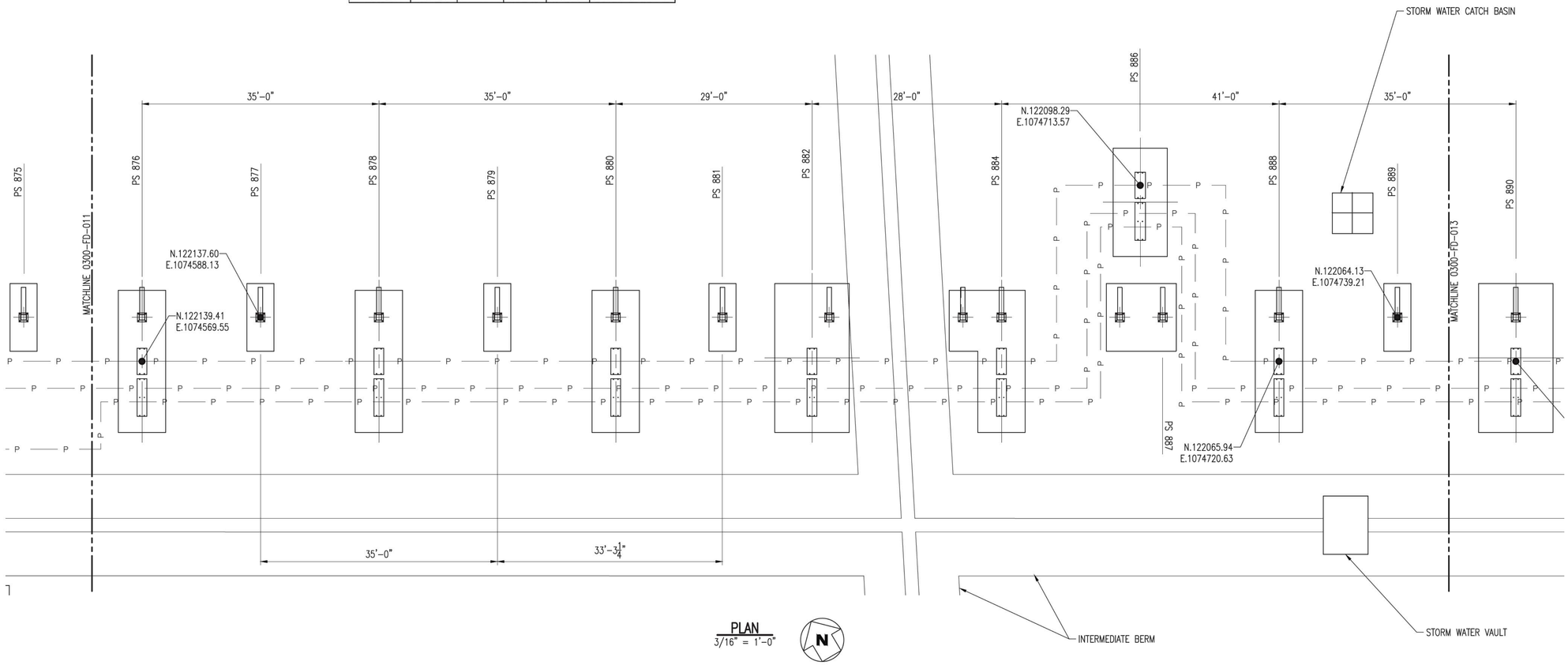

PLAN
3/16" = 1'-0"

NO.	DATE	REVISION	BY	CK'D	APP
–	–	–	–	–	–
HH	11-14-14		NLB	–	–

R&M ENGINEERING CONSULTANTS
SALT LAKE CITY, UTAH
(801)263-3419

13014

TESORO SAVAGE

THIS DRAWING CONTAINS PROPRIETARY AND PRIVILEGED INFORMATION OF TESORO SAVAGE PETROLEUM LLC AND SHALL NOT BE DISCLOSED OR USED FOR THE BENEFIT OF OTHERS WITHOUT PRIOR WRITTEN PERMISSION OF THE DRAWING OWNER.

CUSTOMER: TESORO SAVAGE PETROLEUM TERMINAL LLC

PROJECT: TESORO SAVAGE VANCOUVER ENERGY DISTRIBUTION TERMINAL LLC
PORT OF VANCOUVER, WASHINGTON

DESCRIPTION: FOOTING & FOUNDATION PLOT PLAN
AREA 0300

DESIGN:		START DATE: 07-31-13	SCALE: AS NOTED
DRAWN: NMJ		PRINT DATE:	PROJECT MANAGER: DC
CHECKED:		APPROVED:	SIZE: 24x36
DRAWING NUMBER			SHEET 1/1 REV. HH
0300-FD-012			

13014 FOUNDATION PLOT PLAN Area 0300 11m14-14

EX-0001-007581-PCE

KEY PLAN

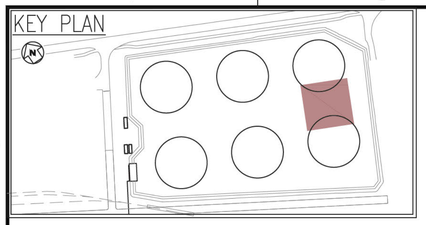

BEARING FOR ALL PIPE SUPPORTS & CABLE TRAY SUPPORTS ARE S64°04'02"E OR PERPENDICULAR (THIS DRAWING) U.N.O.

PIPE/CABLE TRAY SUPPORT TABLE
FOR DETAILS SEE DWG 0300-FD-015 U.N.O.

Support Number	B/Pipe		T/Conc.	B/Conc. Ftg.	Ftg Mark #
PS 889	Reference Only				
PS 890					
PS 891	--		28.79'	25.79'	MK-PS-0300-F11
PS 892	29.38'		28.79'	25.79'	MK-PS-0300-F33
PS 893	--		28.79'	25.79'	MK-PS-0300-F11
PS 896	32.94'		32.35'	26.19'	MK-PS-0300-F17
PS 897	32.94'		32.35'	25.35'	MK-PS-0300-F28
PS 897B	32.94'		32.35'	26.19'	MK-PS-0300-F27
PS 898	29.38'		28.79'	18.04'	MK-PS-0300-F21
PS 899	--		28.79'	25.79'	MK-PS-0300-F23
PS 899B	--		28.79'	25.79'	MK-PS-0300-F38
PS 899C	--		28.79'	25.79'	MK-PS-0300-F38
PS 899D	--		28.79'	25.79'	MK-PS-0300-F38
PS 899E	--		28.79'	25.79'	MK-PS-0300-F38
PS 899F	--		28.79'	25.79'	MK-PS-0300-F38
PS 899G	--		28.79'	25.79'	MK-PS-0300-F38
PS 900	29.38'		28.79'	25.79'	MK-PS-0300-F35
PS 901	29.38'		28.79'	25.79'	MK-PS-0300-F37
PS 902	32.94'		32.35'	26.19'	MK-PS-0300-F9
PS 903	32.94'		32.35'	26.19'	MK-PS-0300-F27
PS 903B	32.94'		32.35'	26.19'	MK-PS-0300-F26
PS 904	32.94'		32.35'	26.19'	MK-PS-0300-F17

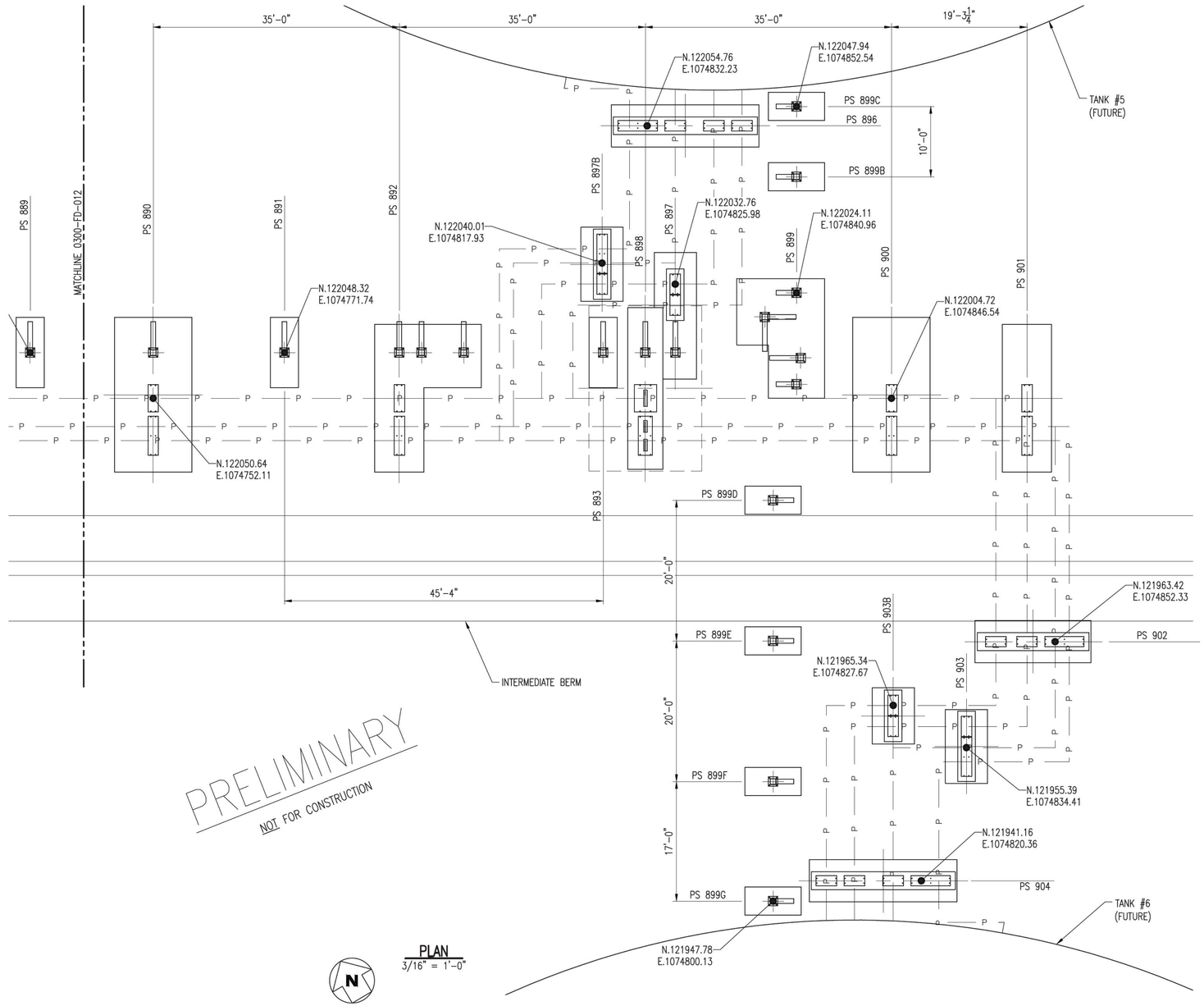

PRELIMINARY
NOT FOR CONSTRUCTION

PLAN
3/16" = 1'-0"

NO.	DATE	REVISION	BY	CK'D	APP
–	–	–	–	–	–
HH	11-14-14		NLB	–	–

R&M ENGINEERING CONSULTANTS
SALT LAKE CITY, UTAH
(801)263-3419

13014

TESORO SAVAGE

THIS DRAWING CONTAINS PROPRIETARY AND PRIVILEGED INFORMATION OF TESORO SAVAGE PETROLEUM LLC AND SHALL NOT BE DISCLOSED OR USED FOR THE BENEFIT OF OTHERS WITHOUT PRIOR WRITTEN PERMISSION OF THE DRAWING OWNER.

CUSTOMER: TESORO SAVAGE PETROLEUM TERMINAL LLC

PROJECT: TESORO SAVAGE VANCOUVER ENERGY DISTRIBUTION TERMINAL LLC
PORT OF VANCOUVER, WASHINGTON

DESCRIPTION: FOOTING & FOUNDATION PLOT PLAN
AREA 0300

DESIGN:	START DATE: 07-31-13	SCALE:	AS NOTED
DRAWN: NMJ	PRINT DATE:	PROJECT MANAGER:	DC
CHECKED:	APPROVED:	SIZE:	24x36
DRAWING NUMBER		SHEET	REV.
0300-FD-013		1/1	HH

13014 FOUNDATION PLOT PLAN Area 0300 11=14-14

EX-0001-007582-PCE

PIPE SUPPORT - PS - FOOTING SCHEDULE

FTG. MK.	Remarks	QTY	Ftg. Details DWG #	Quantity of Base Plate MK-PS-___ (See dwg 0100-FD-002 for details)							Embed Plate		Quantity of Anchor Rods MK-PS-___ (See dwg 0100-FD-001 for details)				Made BY	Checked By
				BP 2	BP 3	BP 5	BP 6	BP 9	BP 10	BP 12	Short	Long	AR1	AR2	AR3	AR4		
MK-PS-0300-F1	Support/Guide	7	0300-FD-015		1									4			JBH	
MK-PS-0300-F2	Support/Guide	4	0300-FD-016	2				1					14				JBH	
MK-PS-0300-F3	Support/Guide	2	0300-FD-017	3				1					18				JBH	
MK-PS-0300-F4	Anchor	2	0300-FD-018			2	1			1		1			14	4	JBH	
MK-PS-0300-F5	Anchor	1	0300-FD-019			2	1			1					14	4	JBH	
MK-PS-0300-F6	Anchor	2	0300-FD-020				1									4	JBH	
MK-PS-0300-F7	Cable Tray Only	1	0300-FD-020								3						JBH	
MK-PS-0300-F8	Support/Guide	2	0300-FD-021	2	1			1					14	4			JBH	
MK-PS-0300-F9	Support/Guide	1	0300-FD-022	2				1					14				JBH	
MK-PS-0300-F10	Support/Guide	5	0300-FD-021	2	1			1			1		14	4			JBH	
MK-PS-0300-F11	Cable Tray Only	14	0300-FD-023								1						JBH	
MK-PS-0300-F12	Support/Guide	1	0300-FD-023	2				1					14				JBH	
MK-PS-0300-F13	Support/Guide	1	0300-FD-024	2	1				1		2		14	4			JBH	
MK-PS-0300-F14	Support/Guide	5	0300-FD-025		1			1			1		6	4			JBH	
MK-PS-0300-F15	Support/Guide	1	0300-FD-025		1			1					6	4			JBH	
MK-PS-0300-F16	Support/Guide	3	0300-FD-026	2	1			1					14	4			JBH	
MK-PS-0300-F17	Support/Guide	6	0300-FD-027	3				1					18				JBH	
MK-PS-0300-F18	Cable Tray Only	2	0300-FD-026								3						JBH	
MK-PS-0300-F19	Cable Tray Only	2	0300-FD-028								3						JBH	
MK-PS-0300-F20	Cable Tray Only	2	0300-FD-028								1						JBH	
MK-PS-0300-F21	Anchor	1	0300-FD-029				1			1		1			6	4	JBH	
MK-PS-0300-F22	Cable Tray Only	1	0300-FD-030								2						JBH	
MK-PS-0300-F23	Cable Tray Only	1	0300-FD-030								4						JBH	
MK-PS-0300-F24	Support/Guide	1	0300-FD-031		1			1			1		6	4			JBH	
MK-PS-0300-F25	Support/Guide	3	0300-FD-031	2	1			1			1		14	4			JBH	
MK-PS-0300-F26	Support/Guide	5	0300-FD-032	2									8				JBH	
MK-PS-0300-F27	Support/Guide	2	0300-FD-032	1				1					10				JBH	
MK-PS-0300-F28	Support/Guide	1	0300-FD-033	2							1		8				JBH	
MK-PS-0300-F29	Support/Guide	2	0300-FD-034	2	1			1					14	4			JBH	
MK-PS-0300-F30	Support/Guide	1	0300-FD-034	2	1			1			1		14	4			JBH	
MK-PS-0300-F31	Support/Guide	1	0300-FD-035	2	1			1			2		14	4			JBH	
MK-PS-0300-F32	Support/Guide	1	0300-FD-036	2	1			1			2		14	4			JBH	
MK-PS-0300-F33	Support/Guide	1	0300-FD-037		1			1			3		6	4			JBH	
MK-PS-0300-F34	Support/Guide	1	0300-FD-038		1			1			1		6	4			JBH	
MK-PS-0300-F35	Support/Guide	1	0300-FD-039		1			1					6	4			JBH	
MK-PS-0300-F36	Support/Guide	1	0300-FD-040		1			1			2		6	4			JBH	
MK-PS-0300-F37	Support/Guide	1	0300-FD-040		1			1					6	4			JBH	
MK-PS-0300-F38	Cable Tray Only	18	0300-FD-041								1						JBH	

See Drawings 0300-FD-008 to 0300-FD-013 for Foundation Plot Plan

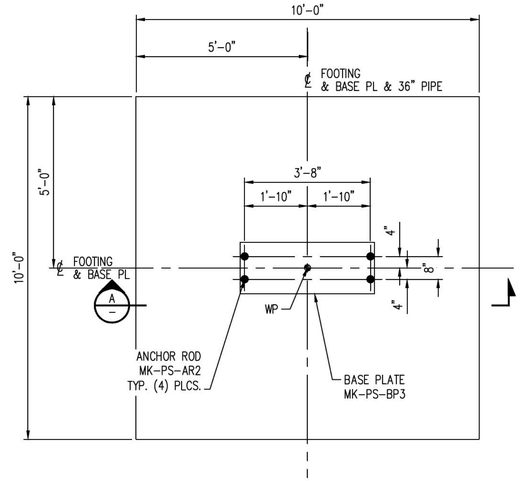

MK-PS-0300-F1
1/2"=1'-0"

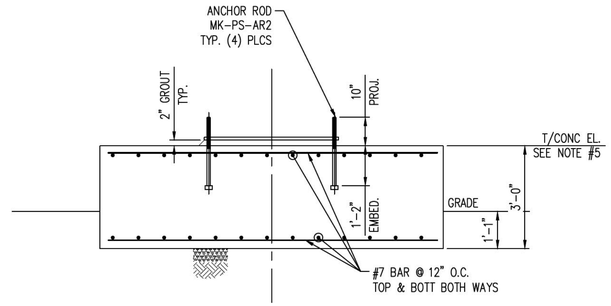

SECTION D
1/2" = 1-0"

PRELIMINARY
NOT FOR CONSTRUCTION

NOTES:

1. FOR CONCRETE GENERAL NOTES SEE DWG 0100-FD-001.
2. BASE PLATE:
   A. SEE DWG 0100-FD-002 FOR DETAILS.
   B. TOLERANCE ON ELEVATION OF TOPS OF EMBEDDED PLATES ARE ±⅛"
   C. BASE PLATES TO BE PROVIDED BY CONCRETE CONTRACTOR
3. ANCHOR ROD, SEE DWG 0100-FD-001 FOR SCHEDULE.
4. ALL REBAR DIMENSIONS ARE TO OUTSIDE OF REBAR U.N.O.
5. SEE FOOTING AND FOUNDATION PLOT PLAN FOR T/CONC. ELEVATIONS.

NO.	DATE	REVISION	BY	CK'D	APP
–	–	–	–	–	–
HH	11-14-14		NLB	–	–

R&M ENGINEERING CONSULTANTS
SALT LAKE CITY, UTAH
(801)263-3419
13014

TESORO SAVAGE

THIS DRAWING CONTAINS PROPRIETARY AND PRIVILEGED INFORMATION OF TESORO SAVAGE PETROLEUM LLC AND SHALL NOT BE DISCLOSED OR USED FOR THE BENEFIT OF OTHERS WITHOUT PRIOR WRITTEN PERMISSION OF THE DRAWING OWNER.

CUSTOMER: TESORO SAVAGE PETROLEUM TERMINAL LLC

PROJECT: TESORO SAVAGE VANCOUVER ENERGY DISTRIBUTION TERMINAL LLC
PORT OF VANCOUVER, WASHINGTON

DESCRIPTION: AREA 0300 PIPE FOOTING SCHEDULE
TABLE & MK-PS-0300-F1

DESIGN:	START DATE: 08-04-13	SCALE:	NTS
DRAWN: PDM	PRINT DATE:	PROJECT MANAGER:	DC
CHECKED:	APPROVED:	SIZE:	24x36
DRAWING NUMBER		SHEET	REV.
0300-FD-015		1/1	HH

Footing Schedule Area 0300 10-27-14

EX-0001-007583-PCE

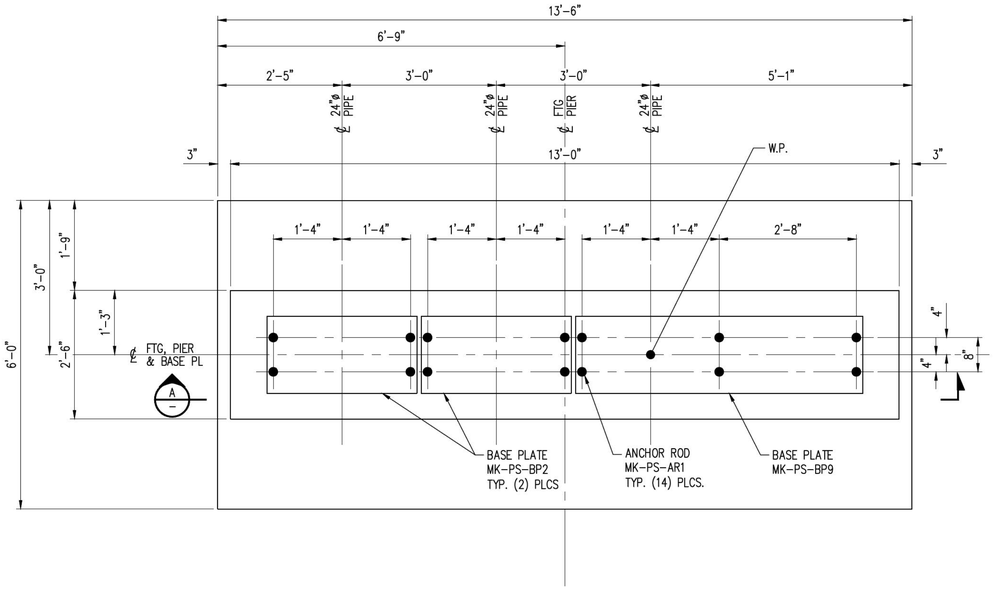

MK-PS-0300-F2
3/4"=1'-0"

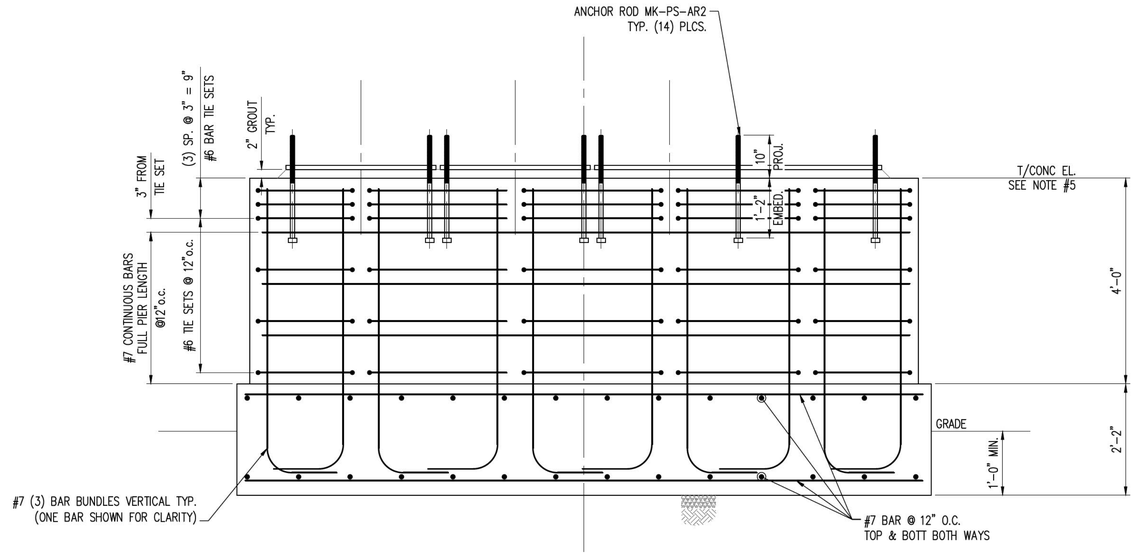

SECTION A
3/4" = 1-0"

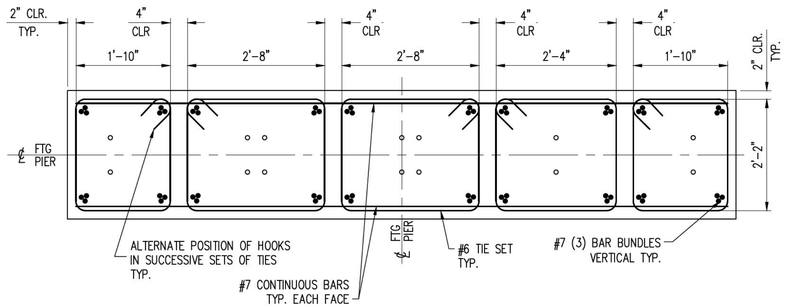

PIER REINFORCEMENT
3/4"=1'-0"

PRELIMINARY
NOT FOR CONSTRUCTION

NOTES:

1. FOR CONCRETE GENERAL NOTES SEE DWG 0100-FD-001.
2. BASE PLATE:
   A. SEE DWG 0100-FD-002 FOR DETAILS.
   B. TOLERANCE ON ELEVATION OF TOPS OF EMBEDDED PLATES ARE $\pm\frac{1}{8}$"
   C. BASE PLATES TO BE PROVIDED BY CONCRETE CONTRACTOR
3. ANCHOR ROD, SEE DWG 0100-FD-001 FOR SCHEDULE.
4. ALL REBAR DIMENSIONS ARE TO OUTSIDE OF REBAR U.N.O.
5. SEE FOOTING AND FOUNDATION PLOT PLAN FOR T/CONC. ELEVATIONS.

NO.	DATE	REVISION	BY	CK'D	APP
–	–	–	–	–	–
HH	11-14-14		NLB	–	–

Footing Schedule Area 0300 10-27-14

R&M ENGINEERING CONSULTANTS
SALT LAKE CITY, UTAH
(801)263-3419
13014

TESORO SAVAGE

THIS DRAWING CONTAINS PROPRIETARY AND PRIVILEGED INFORMATION OF TESORO SAVAGE PETROLEUM LLC AND SHALL NOT BE DISCLOSED OR USED FOR THE BENEFIT OF OTHERS WITHOUT PRIOR WRITTEN PERMISSION OF THE DRAWING OWNER.

CUSTOMER: TESORO SAVAGE PETROLEUM TERMINAL LLC

PROJECT: TESORO SAVAGE VANCOUVER ENERGY DISTRIBUTION TERMINAL LLC
PORT OF VANCOUVER, WASHINGTON

DESCRIPTION:
AREA 0300 PIPE FOOTING SCHEDULE
MK-PS-0300-F2

DESIGN:		START DATE: 08-04-13		SCALE:	NTS
DRAWN:	PDM	PRINT DATE:		PROJECT MANAGER:	DC
CHECKED:		APPROVED:		SIZE:	24x36
DRAWING NUMBER				SHEET	REV.
0300-FD-016				1/1	HH

EX-0001-007584-PCE

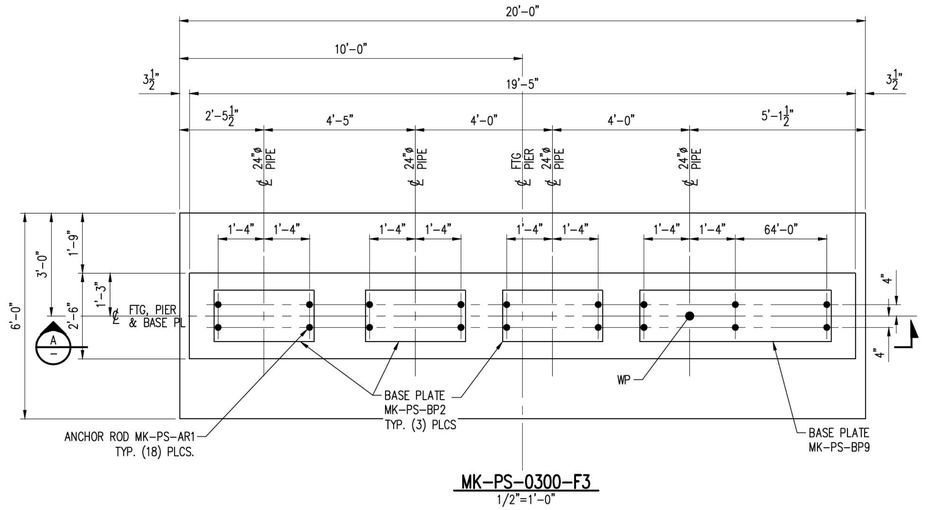

MK-PS-0300-F3
1/2"=1'-0"

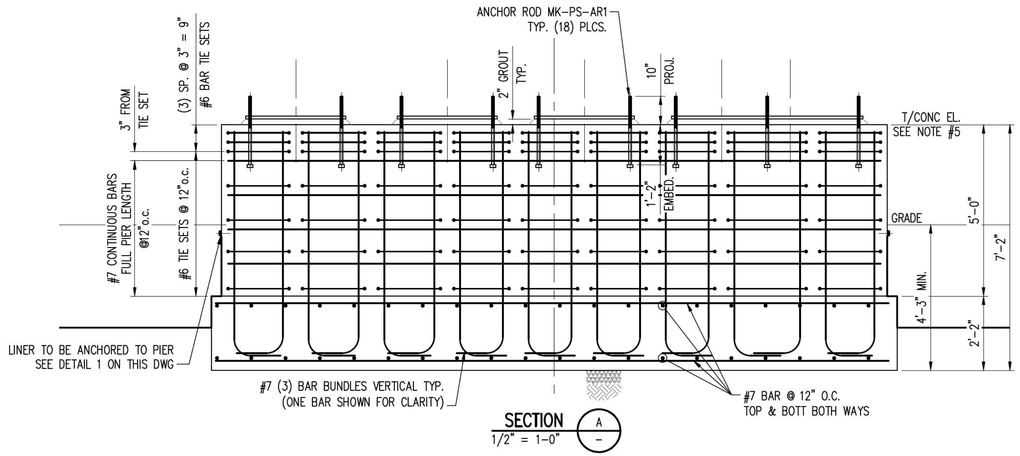

SECTION A
1/2" = 1-0"

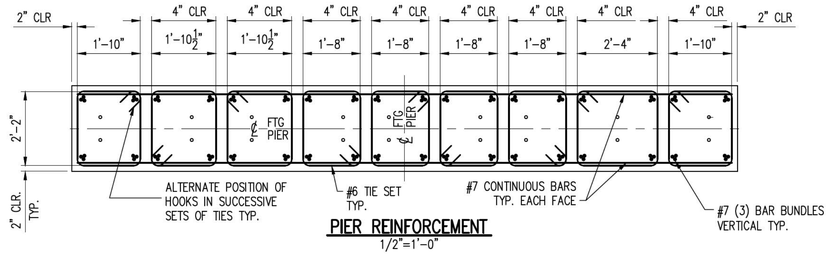

PIER REINFORCEMENT
1/2"=1'-0"

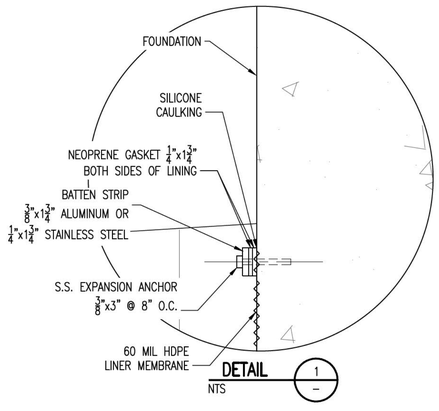

DETAIL 1
NTS

PRELIMINARY
NOT FOR CONSTRUCTION

NOTES:

1. FOR CONCRETE GENERAL NOTES SEE DWG 0100-FD-001.
2. BASE PLATE:
   A. SEE DWG 0100-FD-002 FOR DETAILS.
   B. TOLERANCE ON ELEVATION OF TOPS OF EMBEDDED PLATES ARE ±⅛"
   C. BASE PLATES TO BE PROVIDED BY CONCRETE CONTRACTOR
3. ANCHOR ROD, SEE DWG 0100-FD-001 FOR SCHEDULE.
4. ALL REBAR DIMENSIONS ARE TO OUTSIDE OF REBAR U.N.O.
5. SEE FOOTING AND FOUNDATION PLOT PLAN FOR T/CONC. ELEVATIONS.

Footing Schedule Area 0300 10-27-14

NO.	DATE	REVISION	BY	CK'D	APP
–	–	–	–	–	–
HH	11-14-14		NLB	–	–

R&M ENGINEERING CONSULTANTS
SALT LAKE CITY, UTAH
(801)263-3419
13014

TESORO SAVAGE

THIS DRAWING CONTAINS PROPRIETARY AND PRIVILEGED INFORMATION OF TESORO SAVAGE PETROLEUM LLC AND SHALL NOT BE DISCLOSED OR USED FOR THE BENEFIT OF OTHERS WITHOUT PRIOR WRITTEN PERMISSION OF THE DRAWING OWNER.

CUSTOMER: TESORO SAVAGE PETROLEUM TERMINAL LLC

PROJECT: TESORO SAVAGE VANCOUVER ENERGY DISTRIBUTION TERMINAL LLC
PORT OF VANCOUVER, WASHINGTON

DESCRIPTION:
AREA 0300 PIPE FOOTING SCHEDULE
MK-PS-0300-F3

DESIGN:	START DATE: 08-04-13	SCALE:	NTS
DRAWN: PDM	PRINT DATE:	PROJECT MANAGER:	DC
CHECKED:	APPROVED:	SIZE:	24x36

DRAWING NUMBER	SHEET	REV.
0300-FD-017	1/1	HH

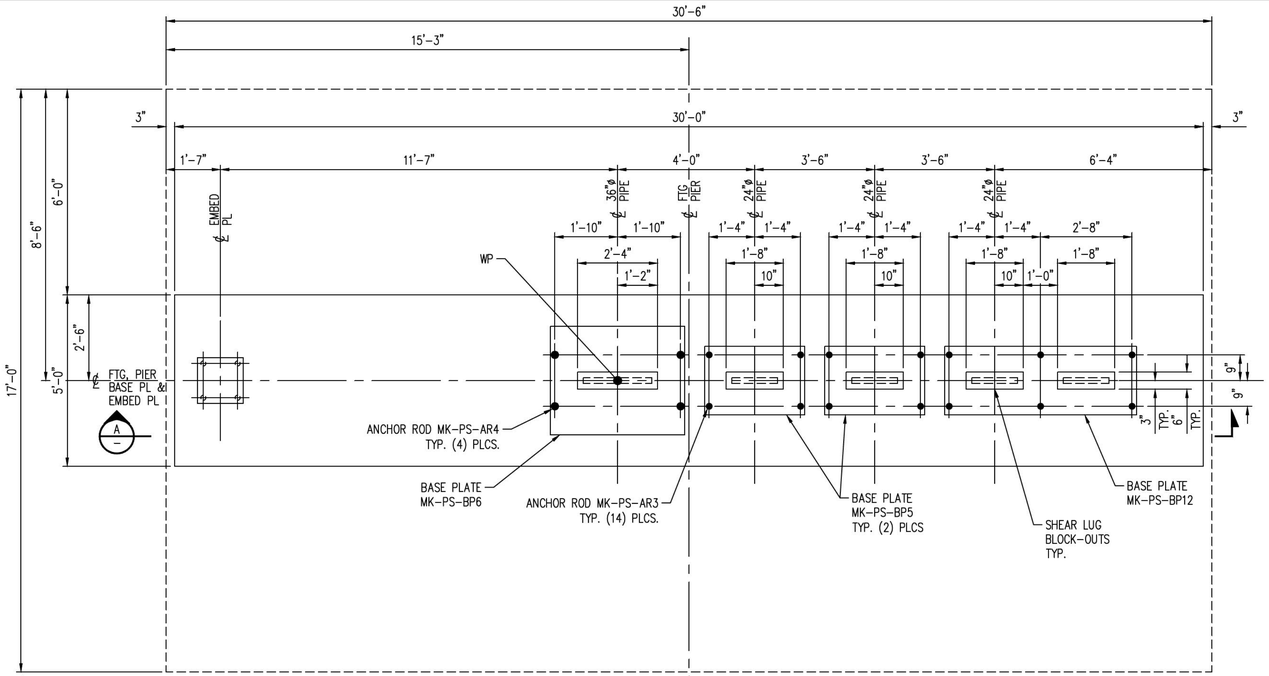

MK-PS-0300-F4
1/2"=1'-0"

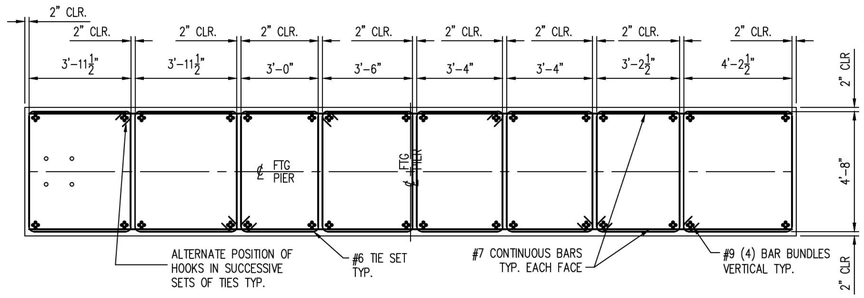

PIER REINFORCEMENT
3/8"=1'-0"

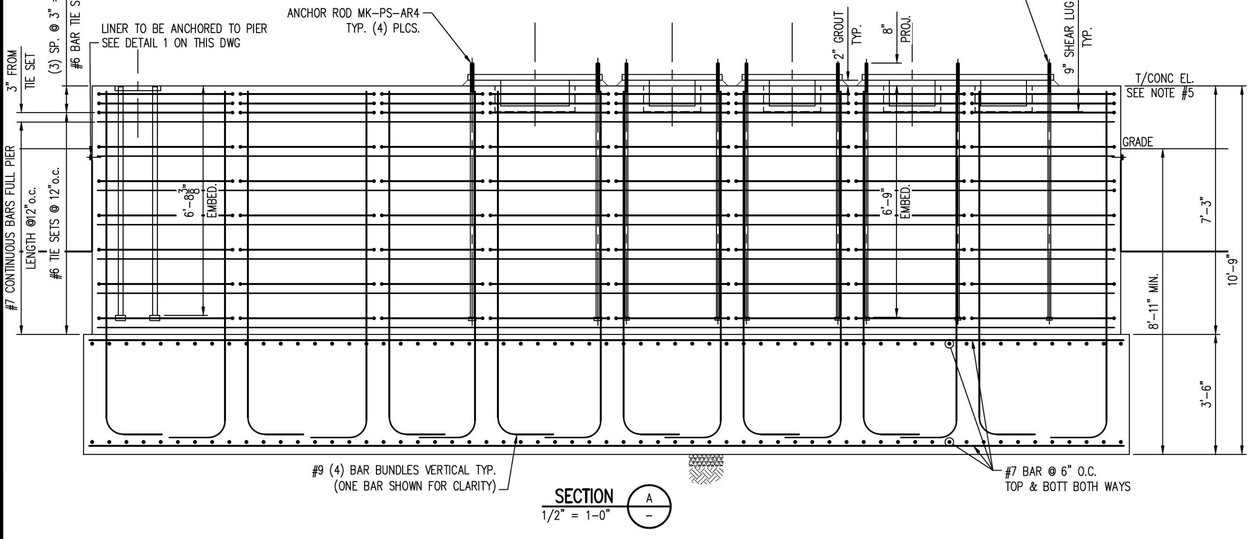

SECTION
1/2" = 1-0"

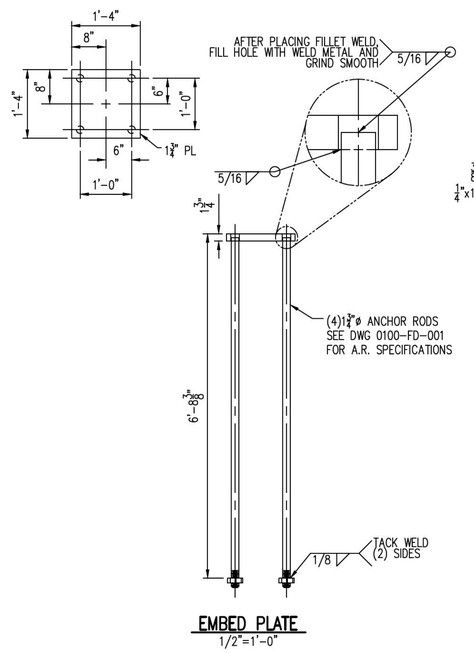

EMBED PLATE
1/2"=1'-0"

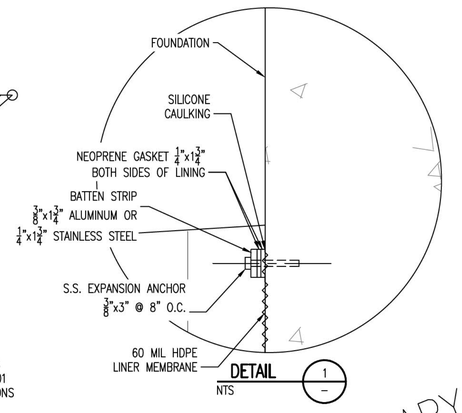

DETAIL 1
NTS

PRELIMINARY
NOT FOR CONSTRUCTION

NOTES:
1. FOR CONCRETE GENERAL NOTES SEE DWG 0100-FD-001.
2. BASE PLATE:
   A. SEE DWG 0100-FD-002 FOR DETAILS.
   B. TOLERANCE ON ELEVATION OF TOPS OF EMBEDDED PLATES ARE ±⅛"
   C. BASE PLATES TO BE PROVIDED BY CONCRETE CONTRACTOR
3. ANCHOR ROD, SEE DWG 0100-FD-001 FOR SCHEDULE.
4. ALL REBAR DIMENSIONS ARE TO OUTSIDE OF REBAR U.N.O.
5. SEE FOOTING AND FOUNDATION PLOT PLAN FOR T/CONC. ELEVATIONS.

NO.	DATE	REVISION	BY	CK'D	APP
–	–	–	–	–	–
HH	11-14-14		NLB	–	–

R&M ENGINEERING CONSULTANTS
SALT LAKE CITY, UTAH
(801)263-3419

13014

TESORO SAVAGE

THIS DRAWING CONTAINS PROPRIETARY AND PRIVILEGED INFORMATION OF TESORO SAVAGE PETROLEUM LLC AND SHALL NOT BE DISCLOSED OR USED FOR THE BENEFIT OF OTHERS WITHOUT PRIOR WRITTEN PERMISSION OF THE DRAWING OWNER.

CUSTOMER: TESORO SAVAGE PETROLEUM TERMINAL LLC

PROJECT: TESORO SAVAGE VANCOUVER ENERGY DISTRIBUTION TERMINAL LLC
PORT OF VANCOUVER, WASHINGTON

DESCRIPTION:
AREA 0300 PIPE FOOTING SCHEDULE
MK-PS-0300-F4

DESIGN:		START DATE: 08-04-13		SCALE:	NTS
DRAWN:	PDM	PRINT DATE:		PROJECT MANAGER:	DC
CHECKED:		APPROVED:		SIZE:	24x36
DRAWING NUMBER				SHEET	REV.
0300-FD-018				1/1	HH

Footing Schedule Area 0300 10-27-14

EX-0001-007586-PCE

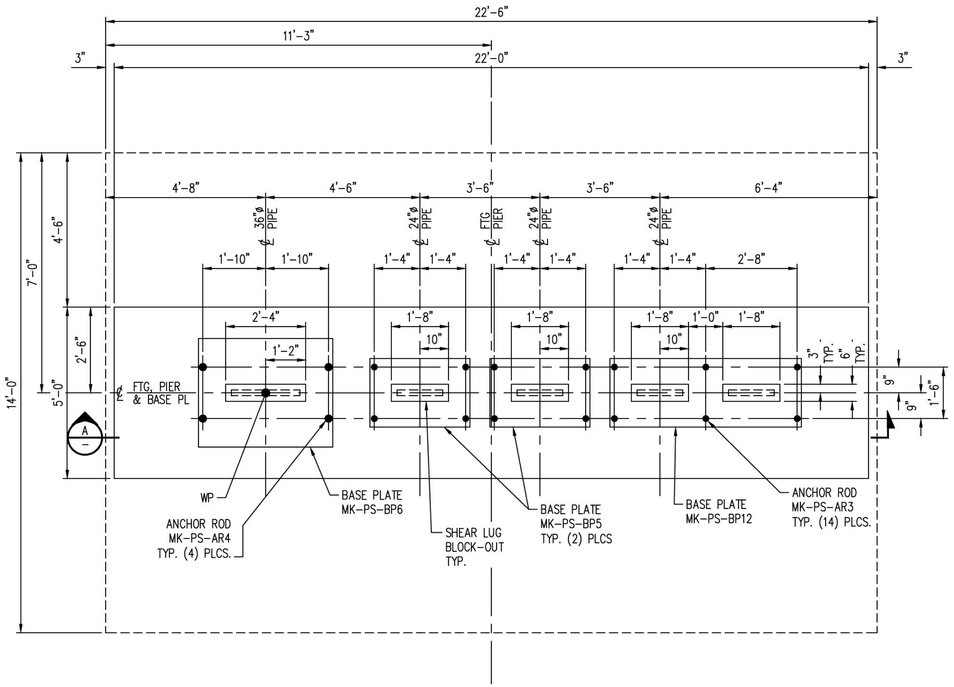

MK-PS-0300-F5
1/2"=1'-0"

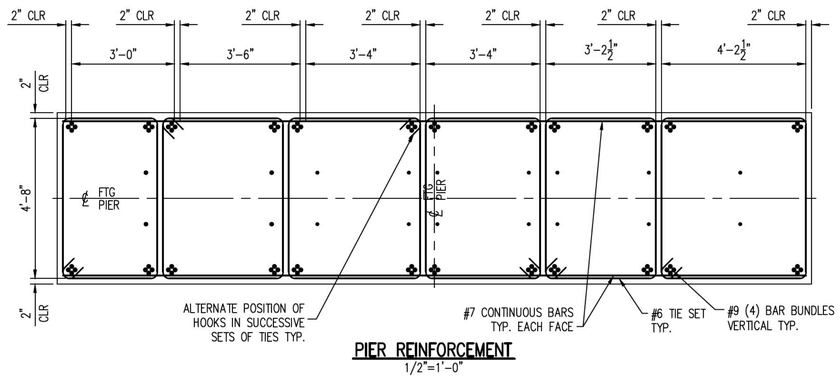

PIER REINFORCEMENT
1/2"=1'-0"

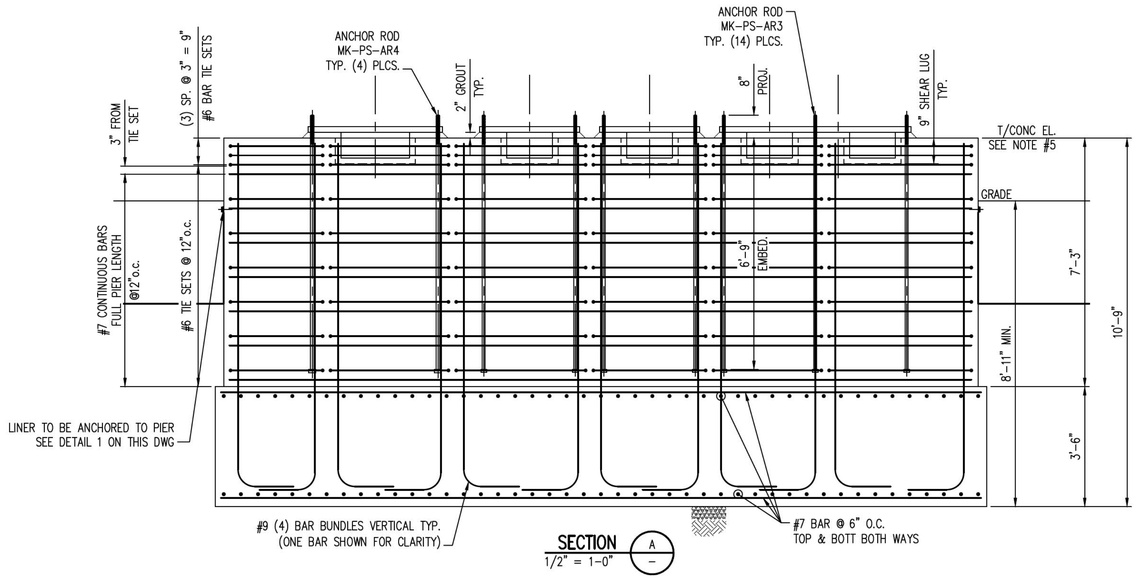

SECTION
1/2" = 1'-0"

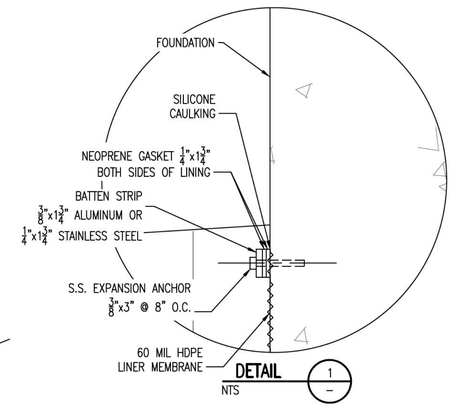

DETAIL
NTS

PRELIMINARY
NOT FOR CONSTRUCTION

NOTES:
1. FOR CONCRETE GENERAL NOTES SEE DWG 0100-FD-001.
2. BASE PLATE:
   A. SEE DWG 0100-FD-002 FOR DETAILS.
   B. TOLERANCE ON ELEVATION OF TOPS OF EMBEDDED PLATES ARE ±⅛"
   C. BASE PLATES TO BE PROVIDED BY CONCRETE CONTRACTOR
3. ANCHOR ROD, SEE DWG 0100-FD-001 FOR SCHEDULE.
4. ALL REBAR DIMENSIONS ARE TO OUTSIDE OF REBAR U.N.O.
5. SEE FOOTING AND FOUNDATION PLOT PLAN FOR T/CONC. ELEVATIONS.

Footing Schedule Area 0300 10-27-14

NO.	DATE	REVISION	BY	CK'D	APP
–	–	–	–	–	–
HH	11-14-14		NLB	–	–

R&M ENGINEERING CONSULTANTS
SALT LAKE CITY, UTAH
(801)263-3419
13014

TESORO SAVAGE™

THIS DRAWING CONTAINS PROPRIETARY AND PRIVILEGED INFORMATION OF TESORO SAVAGE PETROLEUM LLC AND SHALL NOT BE DISCLOSED OR USED FOR THE BENEFIT OF OTHERS WITHOUT PRIOR WRITTEN PERMISSION OF THE DRAWING OWNER.

CUSTOMER: TESORO SAVAGE PETROLEUM TERMINAL LLC

PROJECT: TESORO SAVAGE VANCOUVER ENERGY DISTRIBUTION TERMINAL LLC
PORT OF VANCOUVER, WASHINGTON

DESCRIPTION:
AREA 0300 PIPE FOOTING SCHEDULE
MK-PS-0300-F5

DESIGN:	START DATE: 08-04-13	SCALE:	NTS
DRAWN: PDM	PRINT DATE:	PROJECT MANAGER:	DC
CHECKED:	APPROVED:	SIZE:	24x36
DRAWING NUMBER		SHEET	REV.
0300-FD-019		1/1	HH

EX-0001-007587-PCE

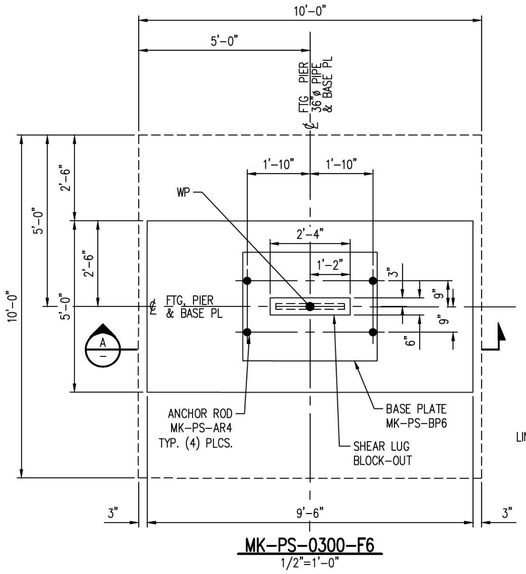

MK-PS-0300-F6
1/2"=1'-0"

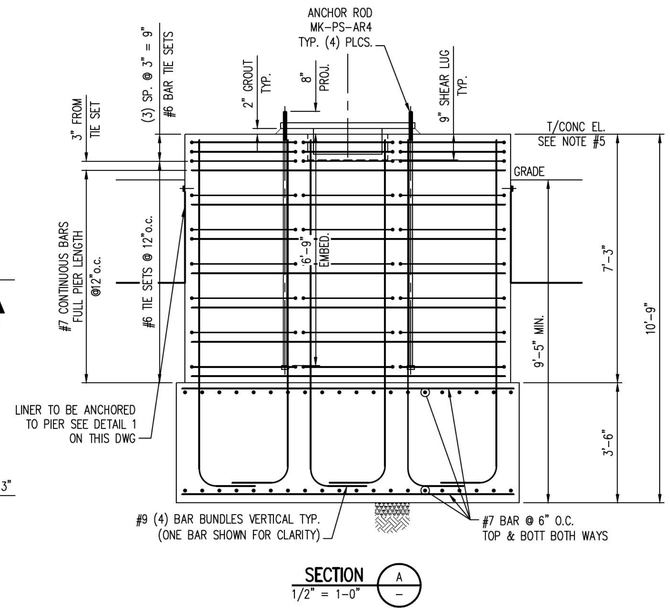

SECTION
1/2" = 1-0" (A)

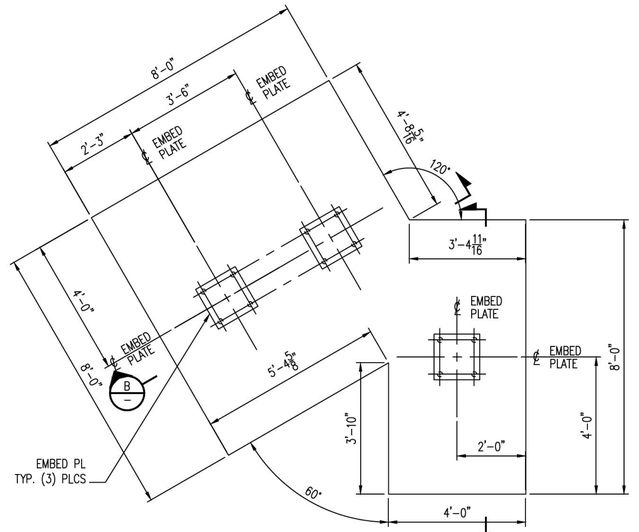

MK-PS-0300-F7
1/2"=1'-0"

PIER REINFORCEMENT
1/2"=1'-0"

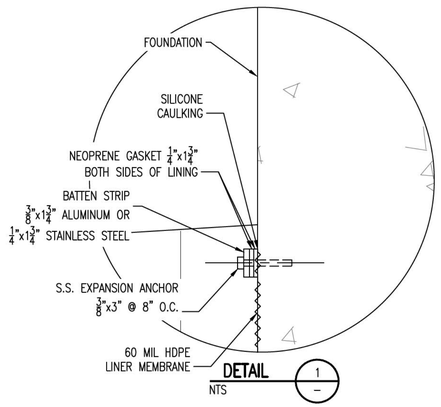

DETAIL
NTS (1)

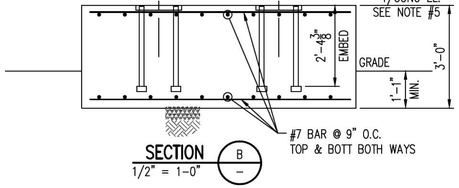

SECTION
1/2" = 1-0" (B)

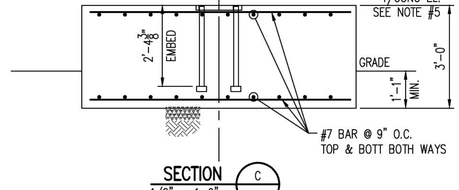

SECTION
1/2" = 1-0" (C)

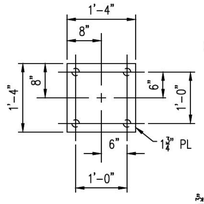

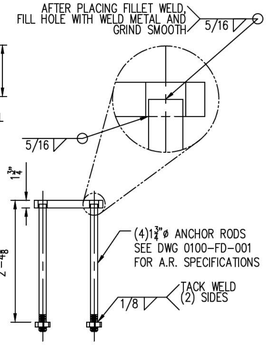

EMBED PLATE
1/2"=1'-0"

PRELIMINARY
NOT FOR CONSTRUCTION

NOTES:
1. FOR CONCRETE GENERAL NOTES SEE DWG 0100-FD-001.
2. BASE PLATE:
   A. SEE DWG 0100-FD-002 FOR DETAILS.
   B. TOLERANCE ON ELEVATION OF TOPS OF EMBEDDED PLATES ARE ±1/8"
   C. BASE PLATES TO BE PROVIDED BY CONCRETE CONTRACTOR
3. ANCHOR ROD, SEE DWG 0100-FD-001 FOR SCHEDULE.
4. ALL REBAR DIMENSIONS ARE TO OUTSIDE OF REBAR U.N.O.
5. SEE FOOTING AND FOUNDATION PLOT PLAN FOR T/CONC. ELEVATIONS.

NO.	DATE	REVISION	BY	CK'D	APP
–	–	–	–	–	–
HH	11-14-14		NLB	–	–

Footing Schedule Area 0300 10-27-14

R&M ENGINEERING CONSULTANTS
SALT LAKE CITY, UTAH
(801)263-3419
13014

TESORO SAVAGE

THIS DRAWING CONTAINS PROPRIETARY AND PRIVILEGED INFORMATION OF TESORO SAVAGE PETROLEUM LLC AND SHALL NOT BE DISCLOSED OR USED FOR THE BENEFIT OF OTHERS WITHOUT PRIOR WRITTEN PERMISSION OF THE DRAWING OWNER.

CUSTOMER: TESORO SAVAGE PETROLEUM TERMINAL LLC

PROJECT: TESORO SAVAGE VANCOUVER ENERGY DISTRIBUTION TERMINAL LLC
PORT OF VANCOUVER, WASHINGTON

DESCRIPTION:
AREA 0300 PIPE FOOTING SCHEDULE
MK-PS-0300-F6 & F7

DESIGN:	START DATE: 08-04-13	SCALE:	NTS
DRAWN: PDM	PRINT DATE:	PROJECT MANAGER:	DC
CHECKED:	APPROVED:	SIZE:	24x36

DRAWING NUMBER	SHEET	REV.
0300-FD-020	1/1	HH

EX-0001-007588-PCE

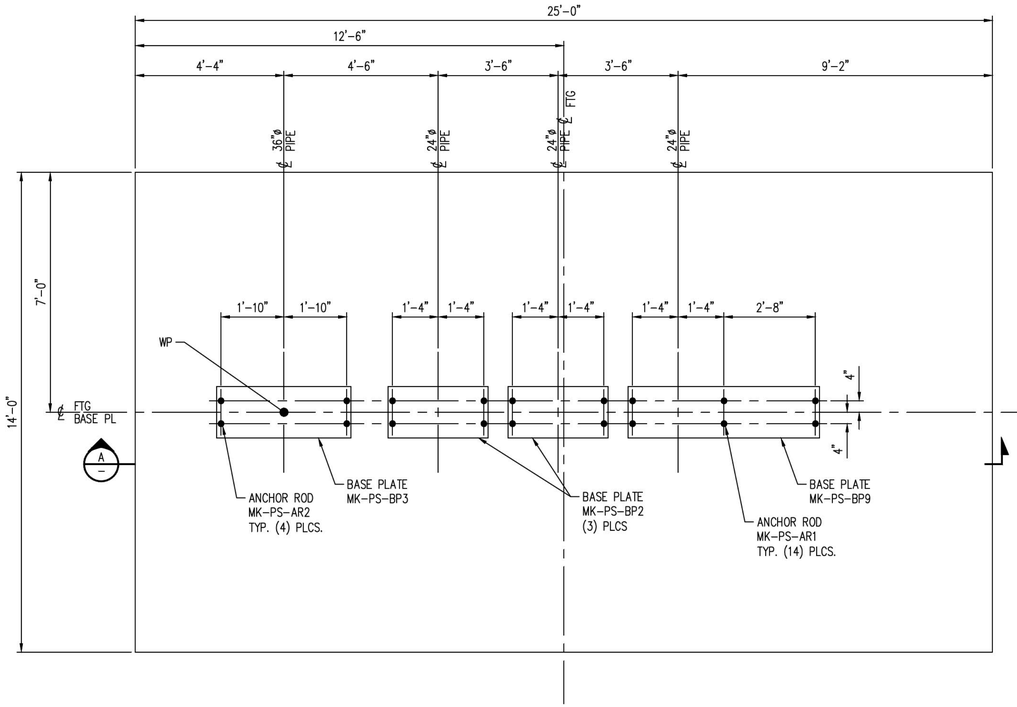

MK-PS-0300-F8
1/2"=1'-0"

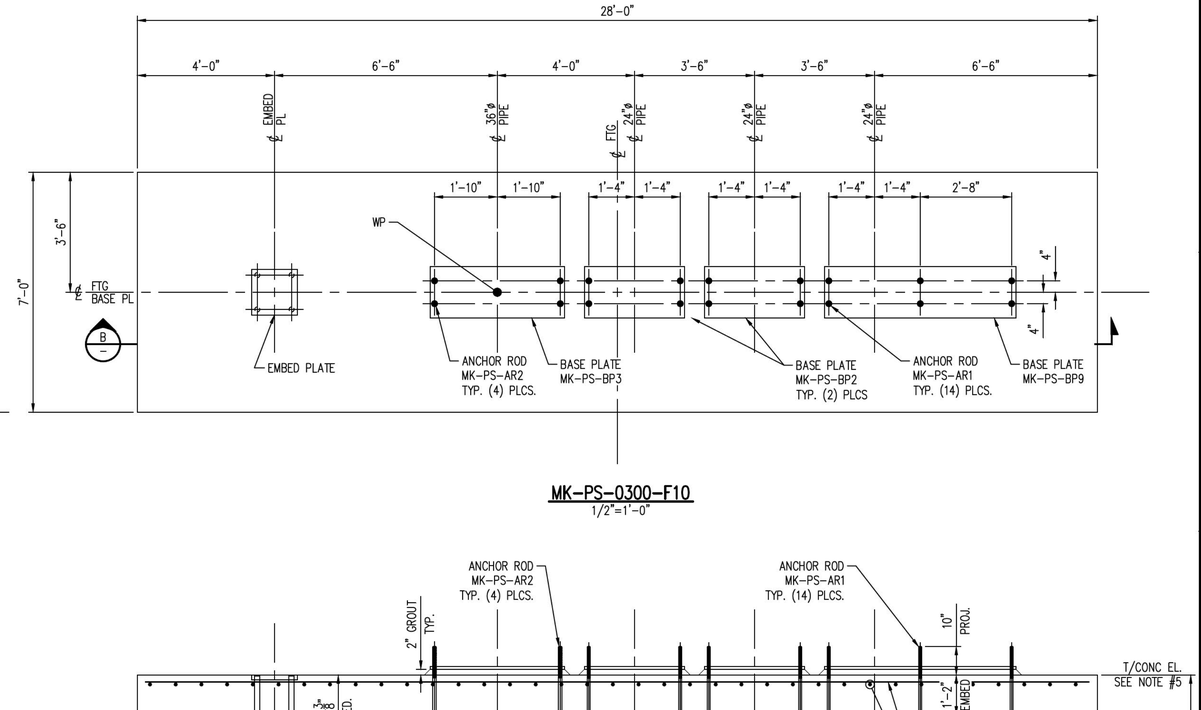

MK-PS-0300-F10
1/2"=1'-0"

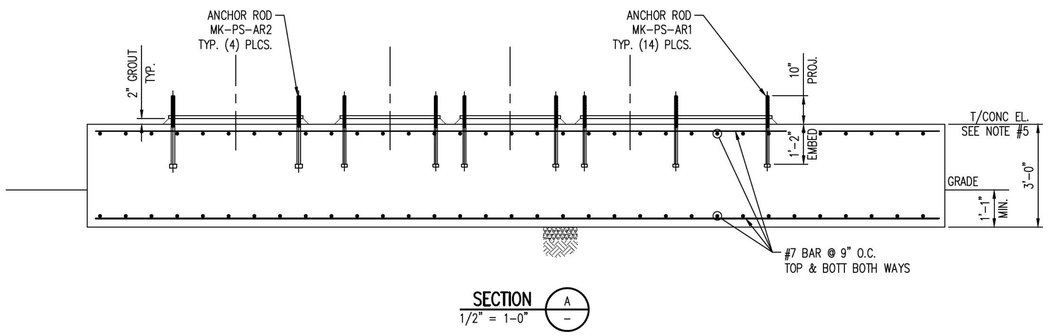

SECTION A
1/2" = 1-0"

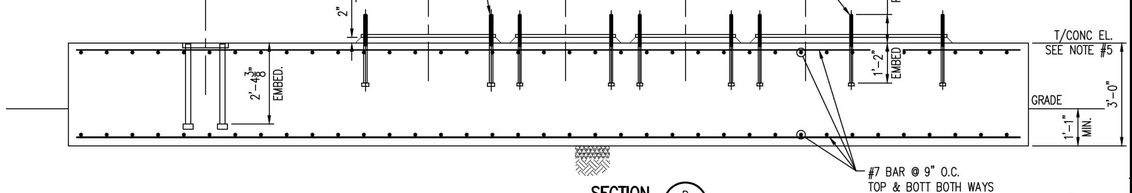

SECTION B
1/2" = 1-0"

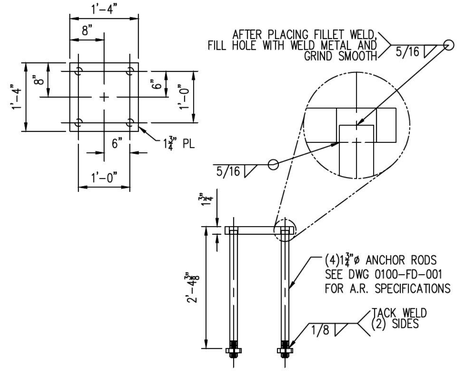

EMBED PLATE
1/2"=1'-0"

PRELIMINARY
NOT FOR CONSTRUCTION

NOTES:

1. FOR CONCRETE GENERAL NOTES SEE DWG 0100-FD-001.
2. BASE PLATE:
   A. SEE DWG 0100-FD-002 FOR DETAILS.
   B. TOLERANCE ON ELEVATION OF TOPS OF EMBEDDED PLATES ARE ±⅜"
   C. BASE PLATES TO BE PROVIDED BY CONCRETE CONTRACTOR
3. ANCHOR ROD, SEE DWG 0100-FD-001 FOR SCHEDULE.
4. ALL REBAR DIMENSIONS ARE TO OUTSIDE OF REBAR U.N.O.
5. SEE FOOTING AND FOUNDATION PLOT PLAN FOR T/CONC. ELEVATIONS.

NO.	DATE	REVISION	BY	CK'D	APP
–	–	–	–	–	–
HH	11-14-14		NLB	–	–

Footing Schedule Area 0300 10-27-14

R&M ENGINEERING CONSULTANTS
SALT LAKE CITY, UTAH
(801)263-3419
13014

TESORO SAVAGE

THIS DRAWING CONTAINS PROPRIETARY AND PRIVILEGED INFORMATION OF TESORO SAVAGE PETROLEUM LLC AND SHALL NOT BE DISCLOSED OR USED FOR THE BENEFIT OF OTHERS WITHOUT PRIOR WRITTEN PERMISSION OF THE DRAWING OWNER.

CUSTOMER: TESORO SAVAGE PETROLEUM TERMINAL LLC

PROJECT: TESORO SAVAGE VANCOUVER ENERGY DISTRIBUTION TERMINAL LLC
PORT OF VANCOUVER, WASHINGTON

DESCRIPTION:
AREA 0300 PIPE FOOTING SCHEDULE
MK-PS-0300-F8 & F10

DESIGN:	START DATE: 08-04-13	SCALE:	NTS
DRAWN: PDM	PRINT DATE:	PROJECT MANAGER:	DC
CHECKED:	APPROVED:	SIZE:	24x36
DRAWING NUMBER		SHEET	REV.
0300-FD-021		1/1	HH

EX-0001-007589-PCE

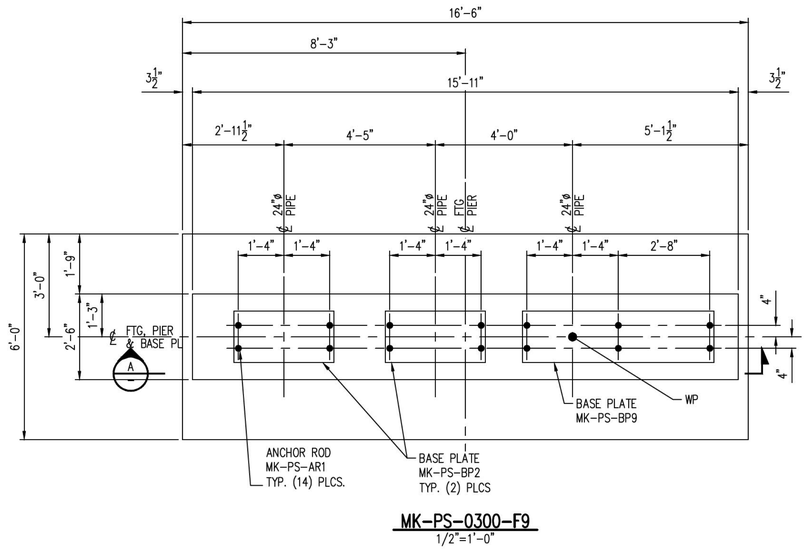

MK-PS-0300-F9
1/2"=1'-0"

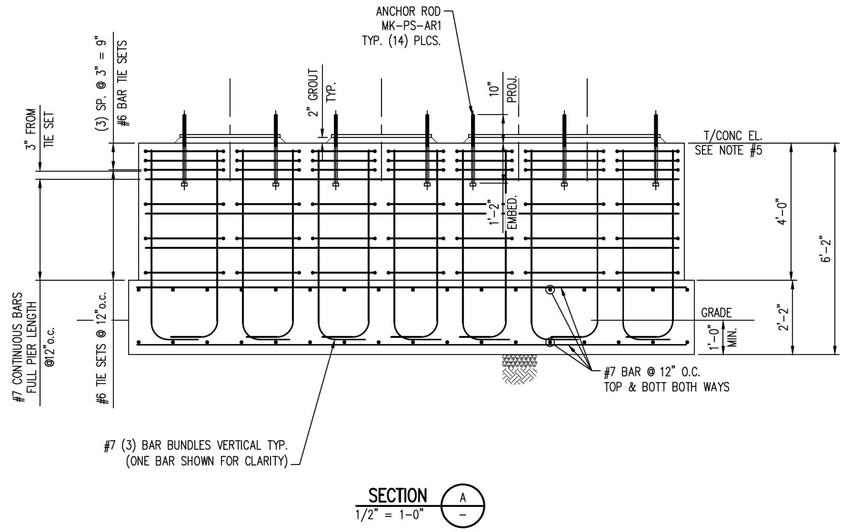

SECTION A/–
1/2" = 1-0"

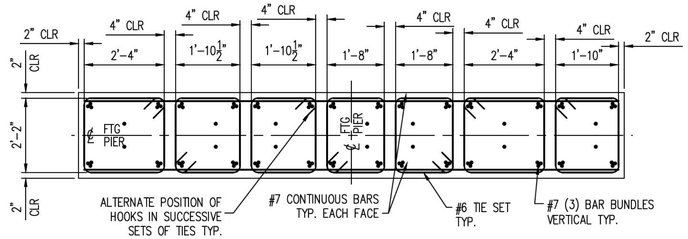

PIER REINFORCEMENT
1/2"=1'-0"

PRELIMINARY
NOT FOR CONSTRUCTION

NOTES:
1. FOR CONCRETE GENERAL NOTES SEE DWG 0100-FD-001.
2. BASE PLATE:
   A. SEE DWG 0100-FD-002 FOR DETAILS.
   B. TOLERANCE ON ELEVATION OF TOPS OF EMBEDDED PLATES ARE ±⅛"
   C. BASE PLATES TO BE PROVIDED BY CONCRETE CONTRACTOR
3. ANCHOR ROD, SEE DWG 0100-FD-001 FOR SCHEDULE.
4. ALL REBAR DIMENSIONS ARE TO OUTSIDE OF REBAR U.N.O.
5. SEE FOOTING AND FOUNDATION PLOT PLAN FOR T/CONC. ELEVATIONS.

Footing Schedule Area 0300 10-27-14

NO.	DATE	REVISION	BY	CK'D	APP
–	–	–	–	–	–
HH	11-14-14		NLB	–	–

R&M ENGINEERING CONSULTANTS
SALT LAKE CITY, UTAH
(801)263-3419
13014

TESORO SAVAGE™

THIS DRAWING CONTAINS PROPRIETARY AND PRIVILEGED INFORMATION OF TESORO SAVAGE PETROLEUM LLC AND SHALL NOT BE DISCLOSED OR USED FOR THE BENEFIT OF OTHERS WITHOUT PRIOR WRITTEN PERMISSION OF THE DRAWING OWNER.

CUSTOMER: TESORO SAVAGE PETROLEUM TERMINAL LLC

PROJECT: TESORO SAVAGE VANCOUVER ENERGY DISTRIBUTION TERMINAL LLC
PORT OF VANCOUVER, WASHINGTON

DESCRIPTION:
AREA 0300 PIPE FOOTING SCHEDULE
MK-PS-0300-F9

DESIGN:	START DATE: 08-04-13	SCALE:	NTS
DRAWN: PDM	PRINT DATE:	PROJECT MANAGER:	DC
CHECKED:	APPROVED:	SIZE:	24x36
DRAWING NUMBER		SHEET	REV.
0300-FD-022		1/1	HH

EX-0001-007590-PCE

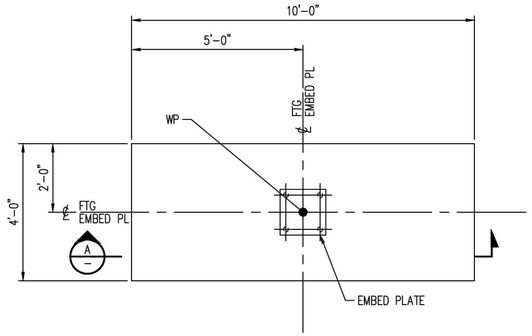

MK-PS-0300-F11
1/2"=1'-0"

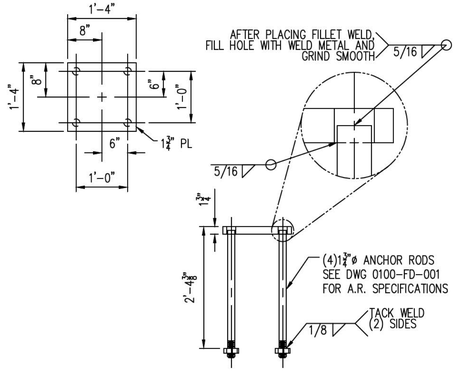

EMBED PLATE
1/2"=1'-0"

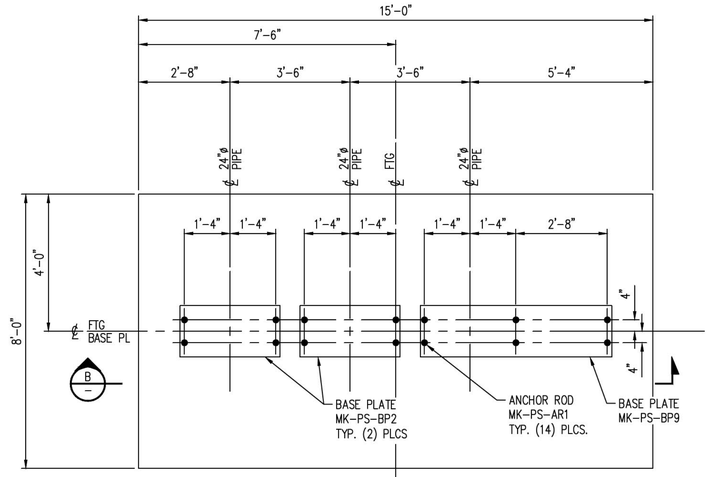

MK-PS-0300-F12
1/2"=1'-0"

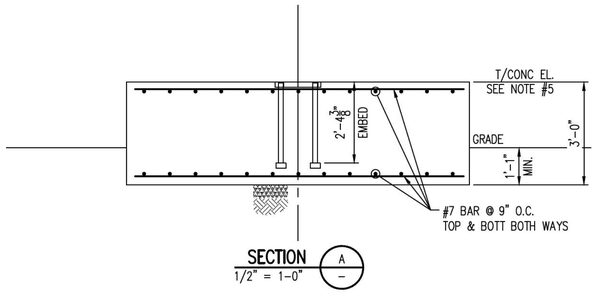

SECTION
1/2" = 1-0"

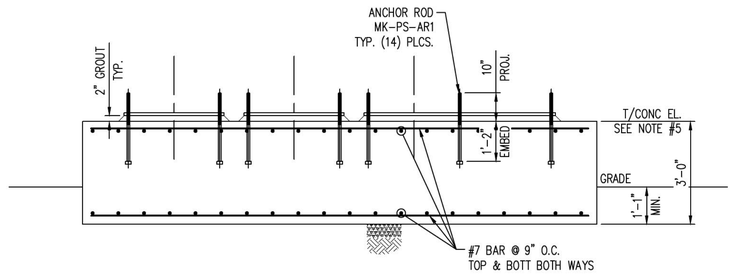

SECTION
1/2" = 1-0"

PRELIMINARY
NOT FOR CONSTRUCTION

NOTES:

1. FOR CONCRETE GENERAL NOTES SEE DWG 0100-FD-001.
2. BASE PLATE:
   A. SEE DWG 0100-FD-002 FOR DETAILS.
   B. TOLERANCE ON ELEVATION OF TOPS OF EMBEDDED PLATES ARE ±⅛"
   C. BASE PLATES TO BE PROVIDED BY CONCRETE CONTRACTOR
3. ANCHOR ROD, SEE DWG 0100-FD-001 FOR SCHEDULE.
4. ALL REBAR DIMENSIONS ARE TO OUTSIDE OF REBAR U.N.O.
5. SEE FOOTING AND FOUNDATION PLOT PLAN FOR T/CONC. ELEVATIONS.

Footing Schedule Area 0300 10-27-14

NO.	DATE	REVISION	BY	CK'D	APP
–	–	–	–	–	–
HH	11-14-14		NLB	–	–

R&M ENGINEERING CONSULTANTS
SALT LAKE CITY, UTAH
(801)263-3419
13014

TESORO SAVAGE

THIS DRAWING CONTAINS PROPRIETARY AND PRIVILEGED INFORMATION OF TESORO SAVAGE PETROLEUM LLC AND SHALL NOT BE DISCLOSED OR USED FOR THE BENEFIT OF OTHERS WITHOUT PRIOR WRITTEN PERMISSION OF THE DRAWING OWNER.

CUSTOMER: TESORO SAVAGE PETROLEUM TERMINAL LLC

PROJECT: TESORO SAVAGE VANCOUVER ENERGY DISTRIBUTION TERMINAL LLC
PORT OF VANCOUVER, WASHINGTON

DESCRIPTION:
AREA 0300 PIPE FOOTING SCHEDULE
MK-PS-0300-F11 & F12

DESIGN:	START DATE: 08-04-13	SCALE:	NTS
DRAWN: PDM	PRINT DATE:	PROJECT MANAGER:	DC
CHECKED:	APPROVED:	SIZE:	24x36
DRAWING NUMBER		SHEET	REV.
0300-FD-023		1/1	HH

EX-0001-007591-PCE

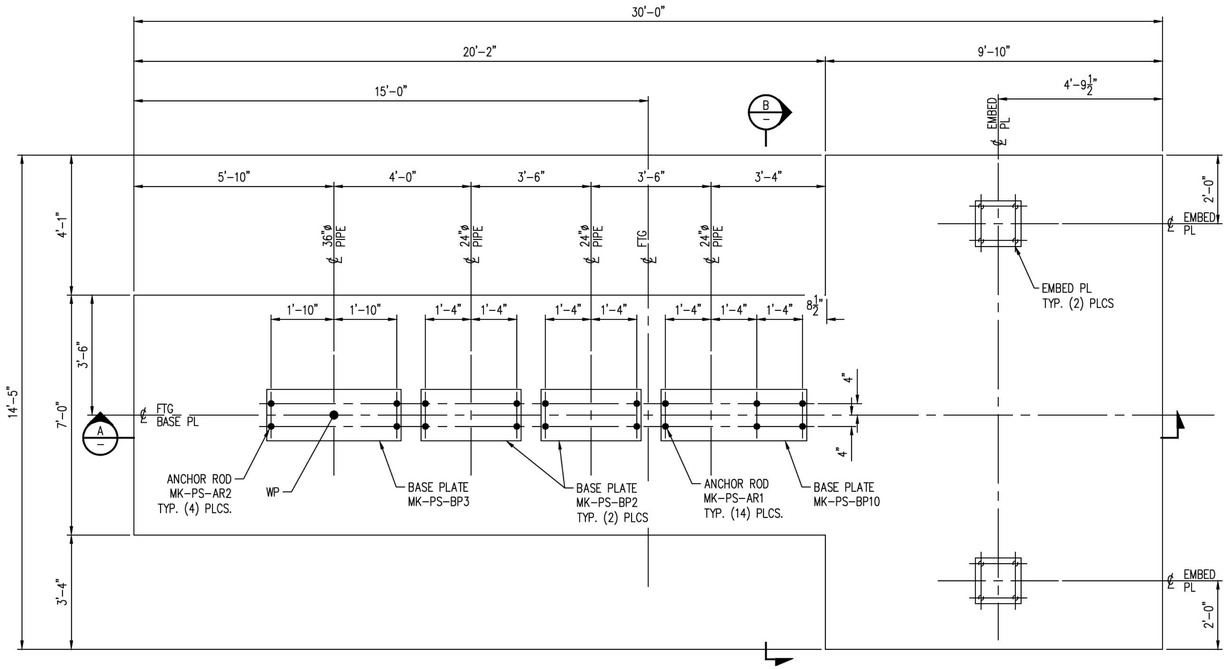

MK-PS-0300-F13
1/2"=1'-0"

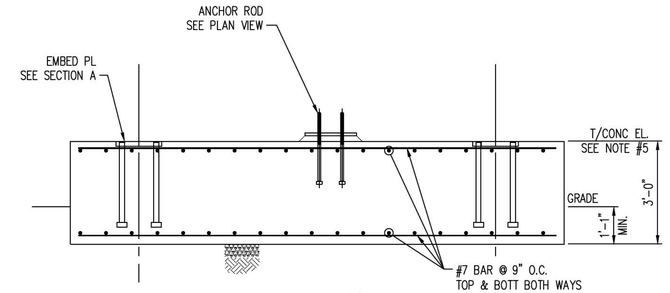

SECTION B
1/2" = 1-0"

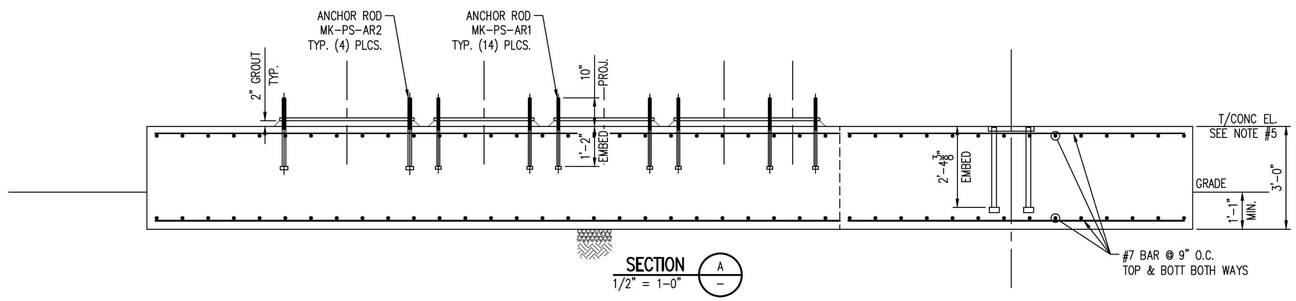

SECTION A
1/2" = 1-0"

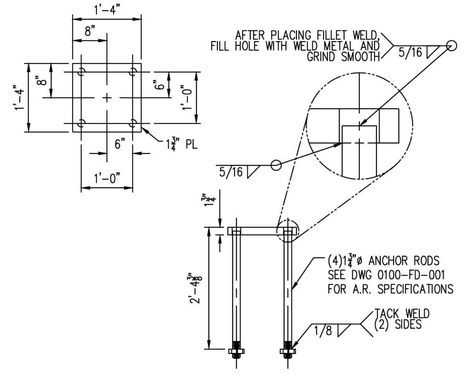

EMBED PLATE
1/2"=1'-0"

PRELIMINARY
NOT FOR CONSTRUCTION

NOTES:

1. FOR CONCRETE GENERAL NOTES SEE DWG 0100-FD-001.
2. BASE PLATE:
   A. SEE DWG 0100-FD-002 FOR DETAILS.
   B. TOLERANCE ON ELEVATION OF TOPS OF EMBEDDED PLATES ARE ±½"
   C. BASE PLATES TO BE PROVIDED BY CONCRETE CONTRACTOR
3. ANCHOR ROD, SEE DWG 0100-FD-001 FOR SCHEDULE.
4. ALL REBAR DIMENSIONS ARE TO OUTSIDE OF REBAR U.N.O.
5. SEE FOOTING AND FOUNDATION PLOT PLAN FOR T/CONC. ELEVATIONS.

NO.	DATE	REVISION	BY	CK'D	APP
–	–	–	–	–	–
HH	11-14-14		NLB	–	–

Footing Schedule Area 0300 10-27-14

R&M ENGINEERING CONSULTANTS
SALT LAKE CITY, UTAH
(801)263-3419

13014

TESORO SAVAGE

THIS DRAWING CONTAINS PROPRIETARY AND PRIVILEGED INFORMATION OF TESORO SAVAGE PETROLEUM LLC AND SHALL NOT BE DISCLOSED OR USED FOR THE BENEFIT OF OTHERS WITHOUT PRIOR WRITTEN PERMISSION OF THE DRAWING OWNER.

CUSTOMER: TESORO SAVAGE PETROLEUM TERMINAL LLC

PROJECT: TESORO SAVAGE VANCOUVER ENERGY DISTRIBUTION TERMINAL LLC
PORT OF VANCOUVER, WASHINGTON

DESCRIPTION:
AREA 0300 PIPE FOOTING SCHEDULE
MK-PS-0300-F13

DESIGN:	START DATE: 08-04-13	SCALE:	NTS
DRAWN: PDM	PRINT DATE:	PROJECT MANAGER:	DC
CHECKED:	APPROVED:	SIZE:	24x36

DRAWING NUMBER	SHEET	REV.
0300-FD-024	1/1	HH

EX-0001-007592-PCE

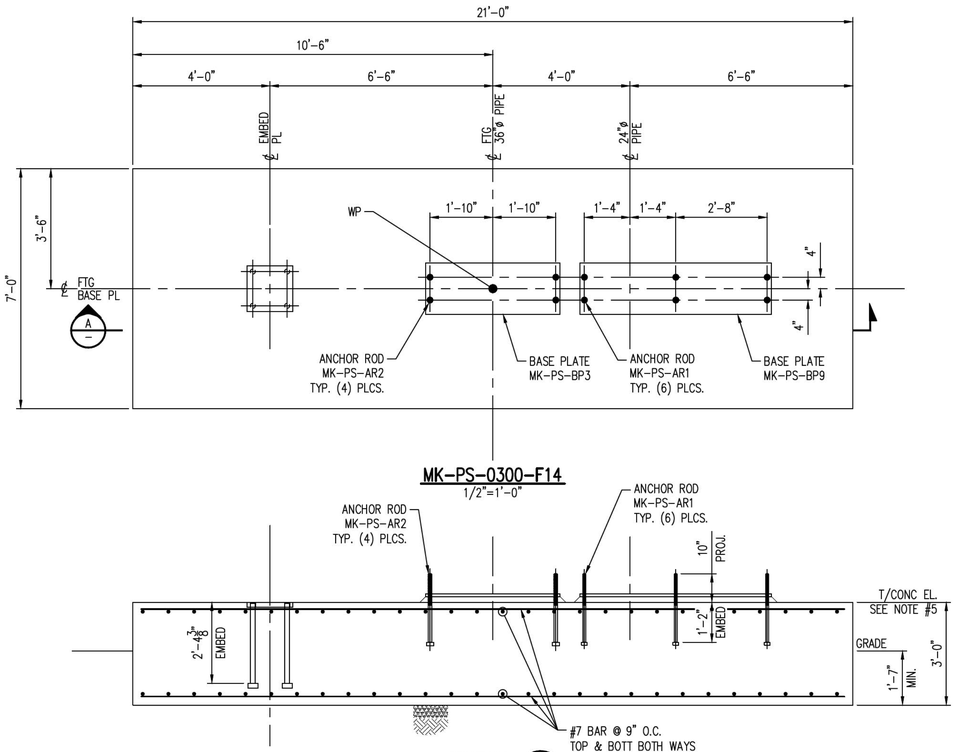

MK-PS-0300-F14

1/2"=1'-0"

SECTION A

1/2" = 1-0"

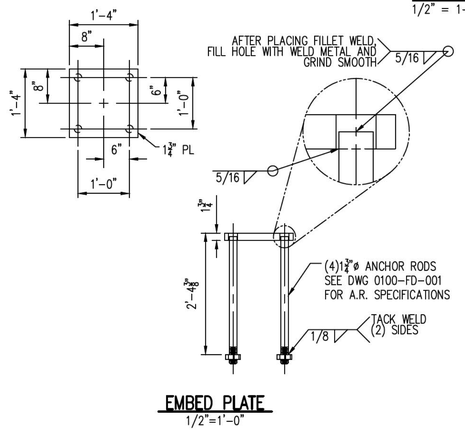

EMBED PLATE

1/2"=1'-0"

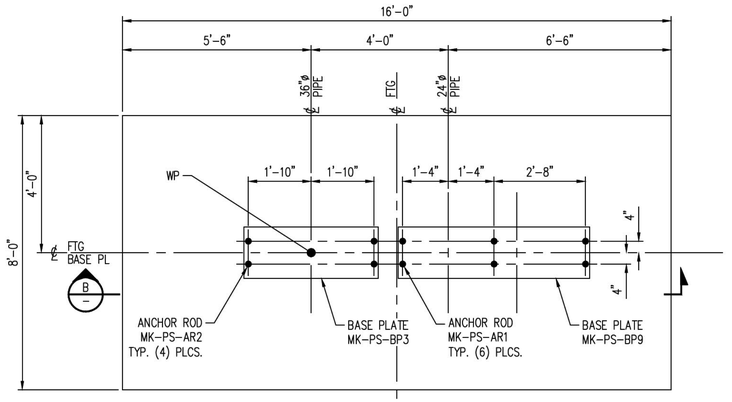

MK-PS-0300-F15

1/2"=1'-0"

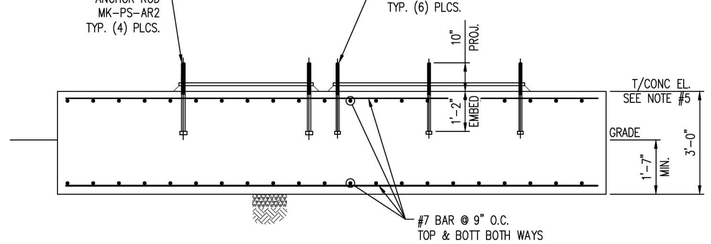

SECTION B

1/2" = 1-0"

PRELIMINARY

NOT FOR CONSTRUCTION

NOTES:

1. FOR CONCRETE GENERAL NOTES SEE DWG 0100-FD-001.
2. BASE PLATE:
   A. SEE DWG 0100-FD-002 FOR DETAILS.
   B. TOLERANCE ON ELEVATION OF TOPS OF EMBEDDED PLATES ARE ±⅛"
   C. BASE PLATES TO BE PROVIDED BY CONCRETE CONTRACTOR
3. ANCHOR ROD, SEE DWG 0100-FD-001 FOR SCHEDULE.
4. ALL REBAR DIMENSIONS ARE TO OUTSIDE OF REBAR U.N.O.
5. SEE FOOTING AND FOUNDATION PLOT PLAN FOR T/CONC. ELEVATIONS.

NO.	DATE	REVISION	BY	CK'D	APP
–	–	–	–	–	–
HH	11-14-14		NLB	–	–

Footing Schedule Area 0300 10-27-14

R&M ENGINEERING CONSULTANTS
SALT LAKE CITY, UTAH
(801)263-3419

13014

TESORO SAVAGE

THIS DRAWING CONTAINS PROPRIETARY AND PRIVILEGED INFORMATION OF TESORO SAVAGE PETROLEUM LLC AND SHALL NOT BE DISCLOSED OR USED FOR THE BENEFIT OF OTHERS WITHOUT PRIOR WRITTEN PERMISSION OF THE DRAWING OWNER.

CUSTOMER: TESORO SAVAGE PETROLEUM TERMINAL LLC

PROJECT: TESORO SAVAGE VANCOUVER ENERGY DISTRIBUTION TERMINAL LLC
PORT OF VANCOUVER, WASHINGTON

DESCRIPTION: AREA 0300 PIPE FOOTING SCHEDULE
MK-PS-0300-F14 & F15

DESIGN:	START DATE: 08-04-13	SCALE:	NTS
DRAWN: PDM	PRINT DATE:	PROJECT MANAGER:	DC
CHECKED:	APPROVED:	SIZE:	24x36
DRAWING NUMBER		SHEET	REV.
0300-FD-025		1/1	HH

EX-0001-007593-PCE

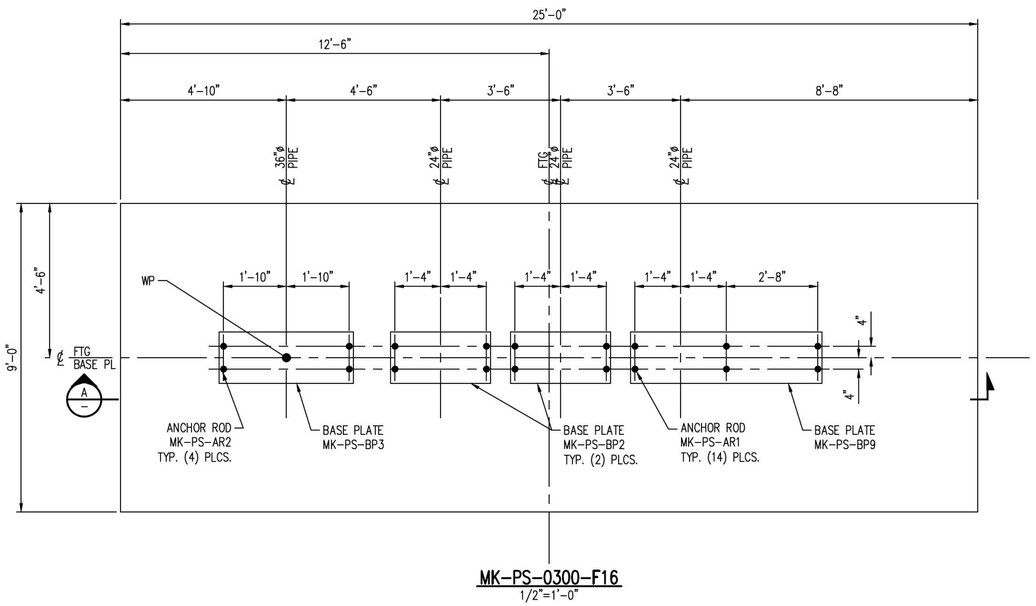

MK-PS-0300-F16
1/2"=1'-0"

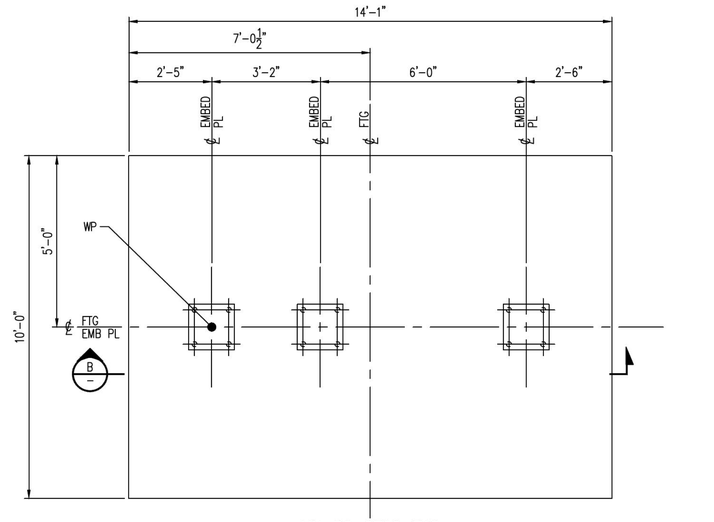

MK-PS-0300-F18
1/2"=1'-0"

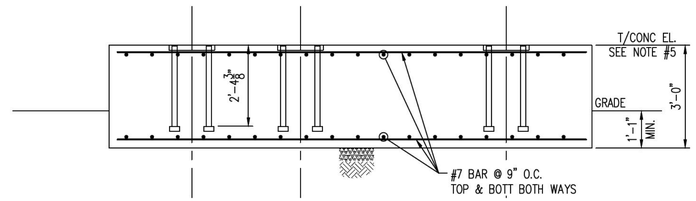

SECTION B
1/2" = 1'-0"

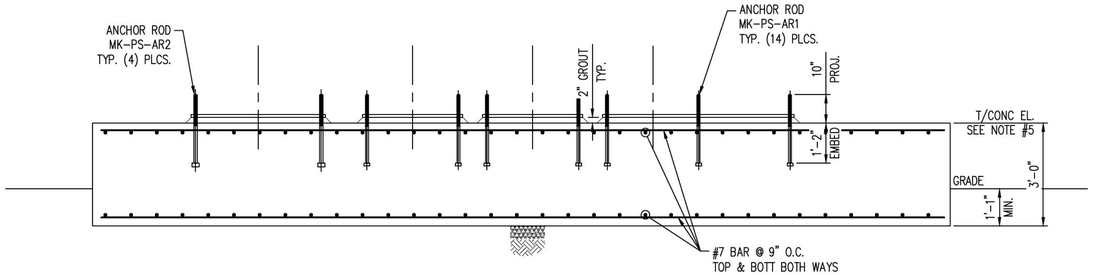

SECTION A
1/2" = 1'-0"

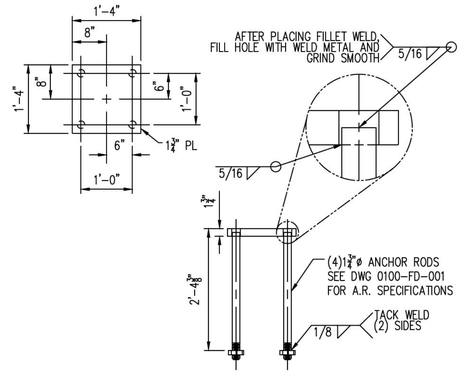

EMBED PLATE
1/2"=1'-0"

PRELIMINARY
NOT FOR CONSTRUCTION

NOTES:

1. FOR CONCRETE GENERAL NOTES SEE DWG 0100-FD-001.
2. BASE PLATE:
   A. SEE DWG 0100-FD-002 FOR DETAILS.
   B. TOLERANCE ON ELEVATION OF TOPS OF EMBEDDED PLATES ARE ±½"
   C. BASE PLATES TO BE PROVIDED BY CONCRETE CONTRACTOR
3. ANCHOR ROD, SEE DWG 0100-FD-001 FOR SCHEDULE.
4. ALL REBAR DIMENSIONS ARE TO OUTSIDE OF REBAR U.N.O.
5. SEE FOOTING AND FOUNDATION PLOT PLAN FOR T/CONC. ELEVATIONS.

NO.	DATE	REVISION	BY	CK'D	APP
–	–	–	–	–	–
HH	11-14-14		NLB	–	–

Footing Schedule Area 0300 10-27-14

R&M ENGINEERING CONSULTANTS
SALT LAKE CITY, UTAH
(801)263-3419
13014

TESORO SAVAGE

THIS DRAWING CONTAINS PROPRIETARY AND PRIVILEGED INFORMATION OF TESORO SAVAGE PETROLEUM LLC AND SHALL NOT BE DISCLOSED OR USED FOR THE BENEFIT OF OTHERS WITHOUT PRIOR WRITTEN PERMISSION OF THE DRAWING OWNER.

CUSTOMER: TESORO SAVAGE PETROLEUM TERMINAL LLC

PROJECT: TESORO SAVAGE VANCOUVER ENERGY DISTRIBUTION TERMINAL LLC
PORT OF VANCOUVER, WASHINGTON

DESCRIPTION:
AREA 0300 PIPE FOOTING SCHEDULE
MK-PS-0300-F16 & F18

DESIGN:	START DATE: 08-04-13	SCALE:	NTS
DRAWN: PDM	PRINT DATE:	PROJECT MANAGER:	DC
CHECKED:	APPROVED:	SIZE:	24x36
DRAWING NUMBER		SHEET	REV.
0300-FD-026		1/1	HH

EX-0001-007594-PCE

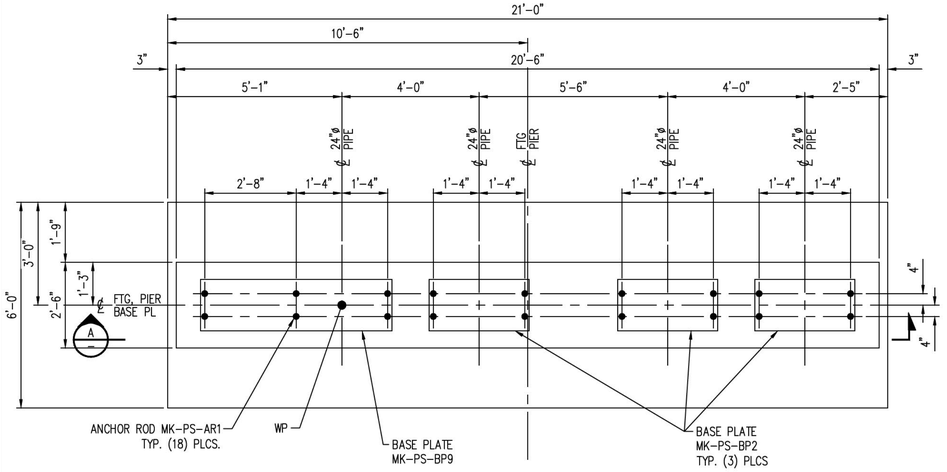

MK-PS-0300-F17
1/2"=1'-0"

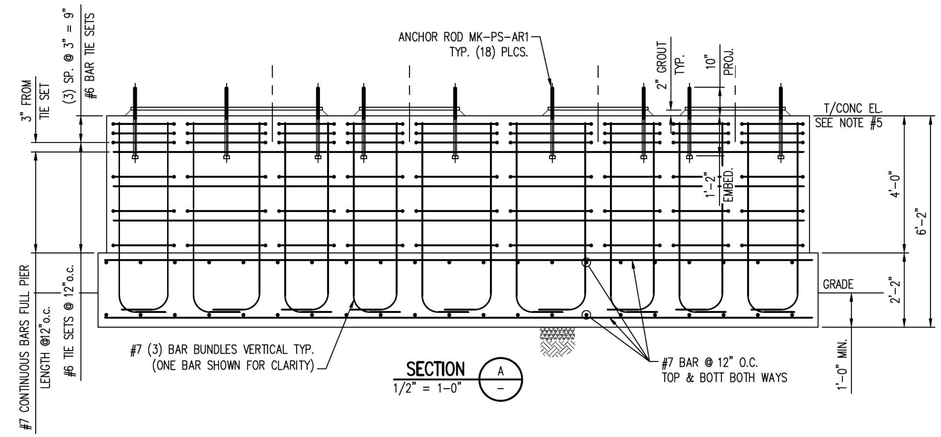

SECTION A –
1/2" = 1-0"

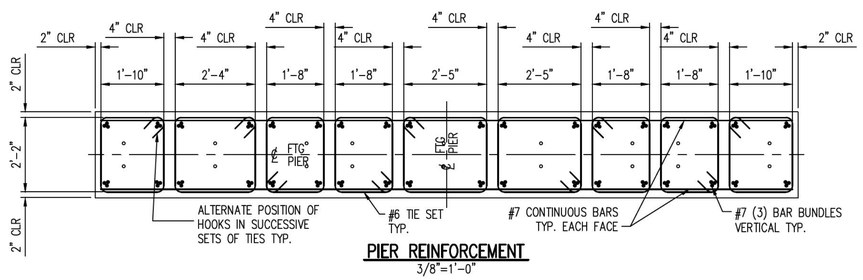

PIER REINFORCEMENT
3/8"=1'-0"

PRELIMINARY
NOT FOR CONSTRUCTION

NOTES:
1. FOR CONCRETE GENERAL NOTES SEE DWG 0100-FD-001.
2. BASE PLATE:
   A. SEE DWG 0100-FD-002 FOR DETAILS.
   B. TOLERANCE ON ELEVATION OF TOPS OF EMBEDDED PLATES ARE ±1/8"
   C. BASE PLATES TO BE PROVIDED BY CONCRETE CONTRACTOR
3. ANCHOR ROD, SEE DWG 0100-FD-001 FOR SCHEDULE.
4. ALL REBAR DIMENSIONS ARE TO OUTSIDE OF REBAR U.N.O.
5. SEE FOOTING AND FOUNDATION PLOT PLAN FOR T/CONC. ELEVATIONS.

NO.	DATE	REVISION	BY	CK'D	APP
–	–	–	–	–	–
HH	11-14-14		NLB	–	–

R&M ENGINEERING CONSULTANTS
SALT LAKE CITY, UTAH
(801)263-3419
13014

TESORO SAVAGE™

THIS DRAWING CONTAINS PROPRIETARY AND PRIVILEGED INFORMATION OF TESORO SAVAGE PETROLEUM LLC AND SHALL NOT BE DISCLOSED OR USED FOR THE BENEFIT OF OTHERS WITHOUT PRIOR WRITTEN PERMISSION OF THE DRAWING OWNER.

CUSTOMER: TESORO SAVAGE PETROLEUM TERMINAL LLC

PROJECT: TESORO SAVAGE VANCOUVER ENERGY DISTRIBUTION TERMINAL LLC
PORT OF VANCOUVER, WASHINGTON

DESCRIPTION: AREA 0300 PIPE FOOTING SCHEDULE
MK-PS-0300-F17

DESIGN:	START DATE: 08-04-13	SCALE:	NTS
DRAWN: PDM	PRINT DATE:	PROJECT MANAGER:	DC
CHECKED:	APPROVED:	SIZE:	24x36
DRAWING NUMBER		SHEET	REV.
0300-FD-027		1/1	HH

Footing Schedule Area 0300 10-27-14

EX-0001-007595-PCE

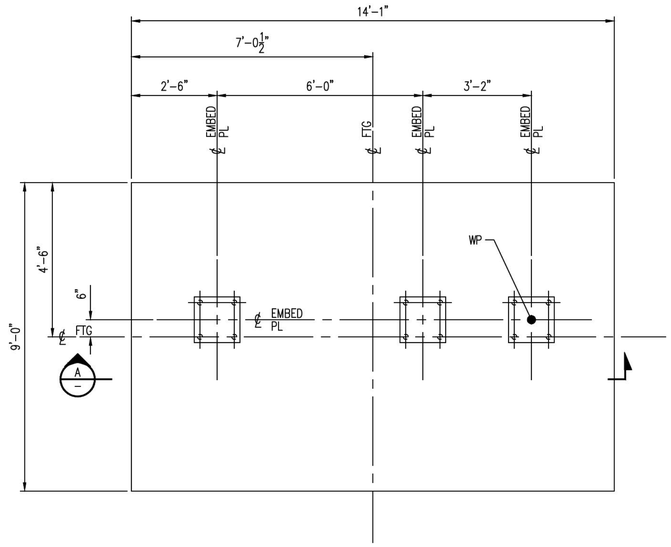

MK-PS-0300-F19
1/2"=1'-0"

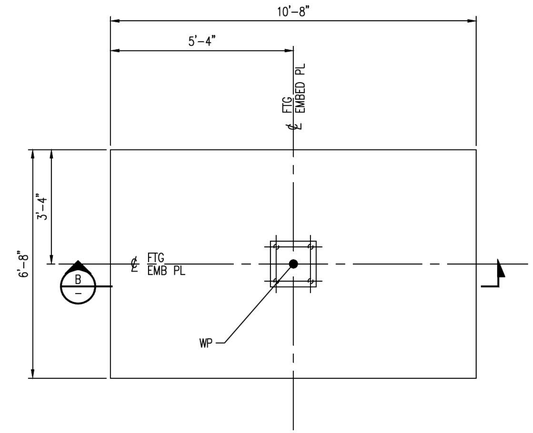

MK-PS-0300-F20
1/2"=1'-0"

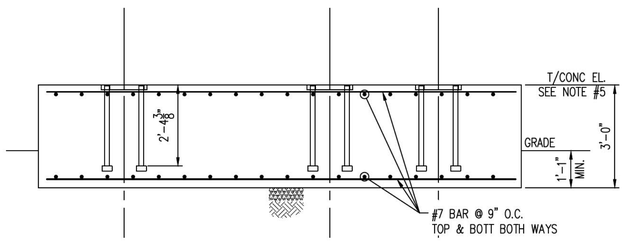

SECTION A
1/2" = 1-0"

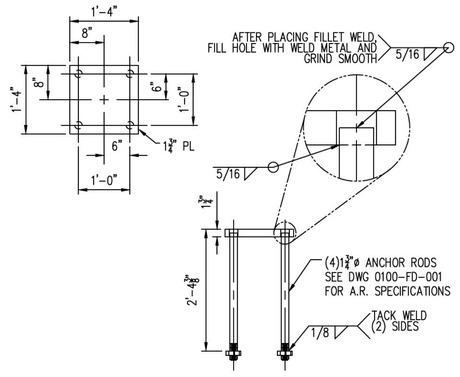

EMBED PLATE
1/2"=1'-0"

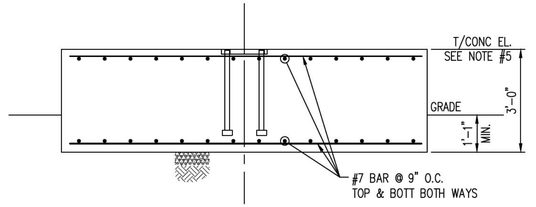

SECTION B
1/2" = 1-0"

NOTES:

1. FOR CONCRETE GENERAL NOTES SEE DWG 0100-FD-001.
2. BASE PLATE:
   A. SEE DWG 0100-FD-002 FOR DETAILS.
   B. TOLERANCE ON ELEVATION OF TOPS OF EMBEDDED PLATES ARE ±¼"
   C. BASE PLATES TO BE PROVIDED BY CONCRETE CONTRACTOR
3. ANCHOR ROD, SEE DWG 0100-FD-001 FOR SCHEDULE.
4. ALL REBAR DIMENSIONS ARE TO OUTSIDE OF REBAR U.N.O.
5. SEE FOOTING AND FOUNDATION PLOT PLAN FOR T/CONC. ELEVATIONS.

PRELIMINARY
NOT FOR CONSTRUCTION

NO.	DATE	REVISION	BY	CK'D	APP
–	–	–	–	–	–
HH	11-14-14		NLB	–	–

R&M ENGINEERING CONSULTANTS
SALT LAKE CITY, UTAH
(801)263-3419
13014

TESORO SAVAGE

THIS DRAWING CONTAINS PROPRIETARY AND PRIVILEGED INFORMATION OF TESORO SAVAGE PETROLEUM LLC AND SHALL NOT BE DISCLOSED OR USED FOR THE BENEFIT OF OTHERS WITHOUT PRIOR WRITTEN PERMISSION OF THE DRAWING OWNER.

CUSTOMER: TESORO SAVAGE PETROLEUM TERMINAL LLC

PROJECT: TESORO SAVAGE VANCOUVER ENERGY DISTRIBUTION TERMINAL LLC
PORT OF VANCOUVER, WASHINGTON

DESCRIPTION: AREA 0300 PIPE FOOTING SCHEDULE
MK-PS-0300-F19 & F20

DESIGN:	START DATE: 08-04-13	SCALE:	NTS
DRAWN: PDM	PRINT DATE:	PROJECT MANAGER:	DC
CHECKED:	APPROVED:	SIZE:	24x36
DRAWING NUMBER		SHEET	REV.
0300-FD-028		1/1	HH

Footing Schedule Area 0300 10-27-14

EX-0001-007596-PCE

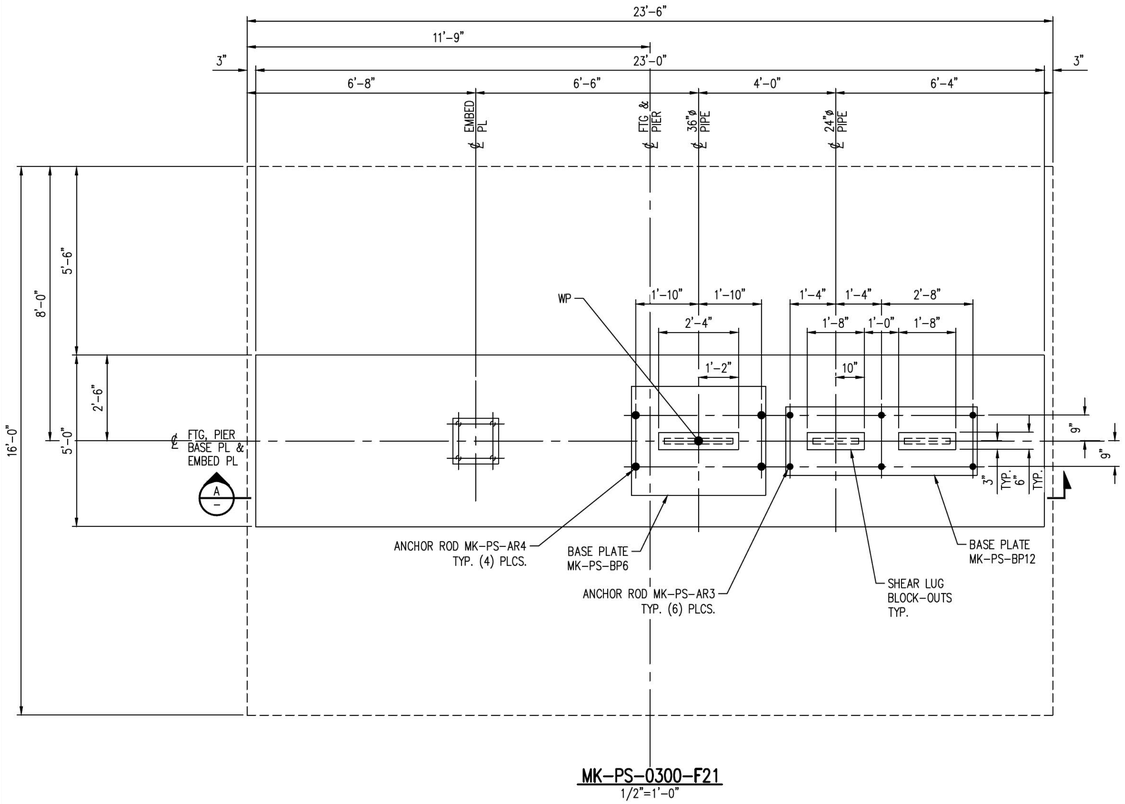

MK-PS-0300-F21
1/2"=1'-0"

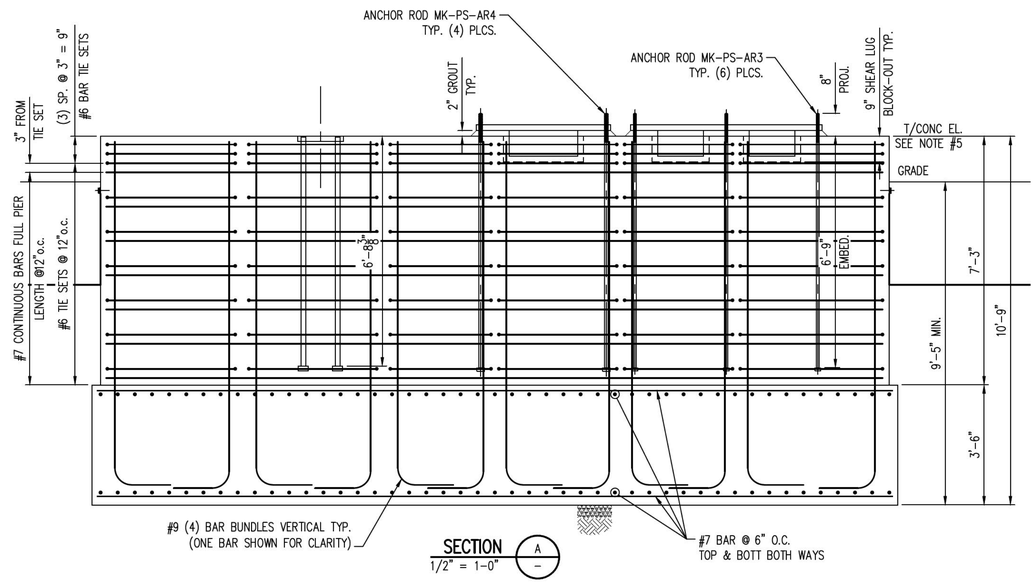

SECTION A
1/2" = 1-0"

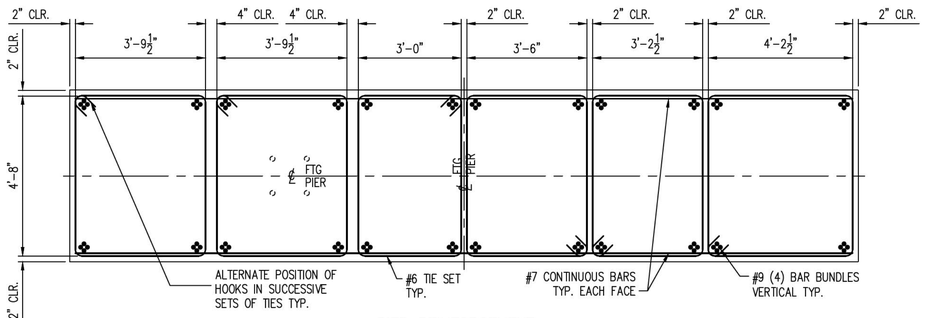

PIER REINFORCEMENT
3/8"=1'-0"

PRELIMINARY
NOT FOR CONSTRUCTION

NOTES:

1. FOR CONCRETE GENERAL NOTES SEE DWG 0100-FD-001.
2. BASE PLATE:
   A. SEE DWG 0100-FD-002 FOR DETAILS.
   B. TOLERANCE ON ELEVATION OF TOPS OF EMBEDDED PLATES ARE ±¼"
   C. BASE PLATES TO BE PROVIDED BY CONCRETE CONTRACTOR
3. ANCHOR ROD, SEE DWG 0100-FD-001 FOR SCHEDULE.
4. ALL REBAR DIMENSIONS ARE TO OUTSIDE OF REBAR U.N.O.
5. SEE FOOTING AND FOUNDATION PLOT PLAN FOR T/CONC. ELEVATIONS.

NO.	DATE	REVISION	BY	CK'D	APP
–	–	–	–	–	–
HH	11-14-14		NLB	–	–

Footing Schedule Area 0300 10-27-14

R&M ENGINEERING CONSULTANTS
SALT LAKE CITY, UTAH
(801)263-3419

13014

TESORO SAVAGE

THIS DRAWING CONTAINS PROPRIETARY AND PRIVILEGED INFORMATION OF TESORO SAVAGE PETROLEUM LLC AND SHALL NOT BE DISCLOSED OR USED FOR THE BENEFIT OF OTHERS WITHOUT PRIOR WRITTEN PERMISSION OF THE DRAWING OWNER.

CUSTOMER: TESORO SAVAGE PETROLEUM TERMINAL LLC

PROJECT: TESORO SAVAGE VANCOUVER ENERGY DISTRIBUTION TERMINAL LLC
PORT OF VANCOUVER, WASHINGTON

DESCRIPTION:
AREA 0300 PIPE FOOTING SCHEDULE
MK-PS-0300-F21

DESIGN:		START DATE: 08-04-13	SCALE: NTS		
DRAWN: PDM		PRINT DATE:	PROJECT MANAGER: DC		
CHECKED:		APPROVED:	SIZE: 24x36		
DRAWING NUMBER			SHEET	REV.	
0300-FD-029			1/1	HH	

EX-0001-007597-PCE

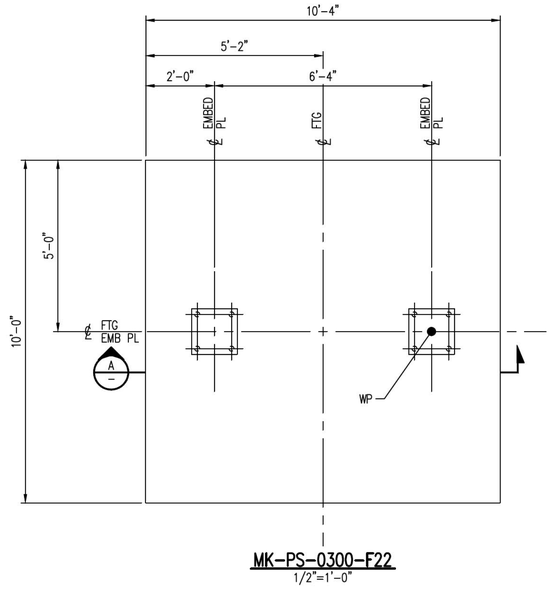

MK-PS-0300-F22
1/2"=1'-0"

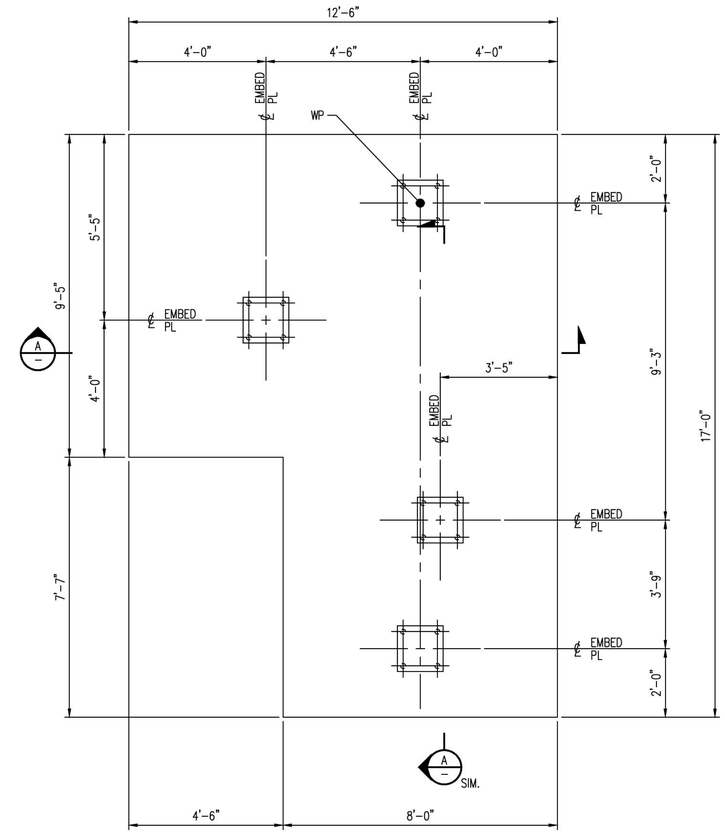

MK-PS-0300-F23
1/2"=1'-0"

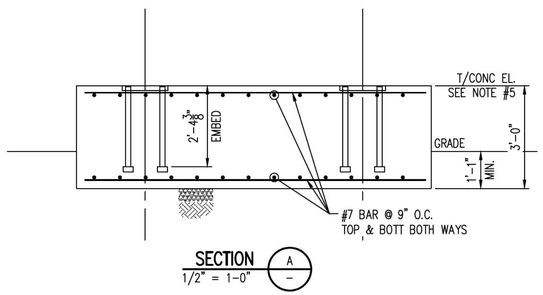

SECTION
1/2" = 1-0"
A

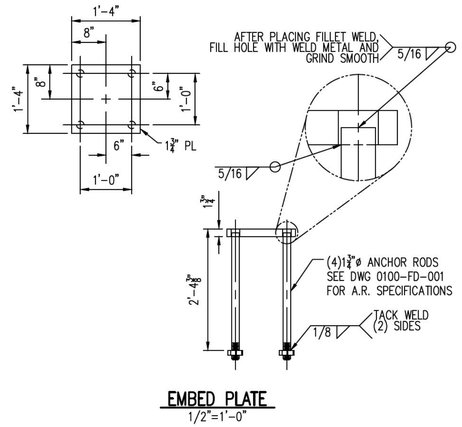

EMBED PLATE
1/2"=1'-0"

NOTES:

1. FOR CONCRETE GENERAL NOTES SEE DWG 0100-FD-001.
2. BASE PLATE:
   A. SEE DWG 0100-FD-002 FOR DETAILS.
   B. TOLERANCE ON ELEVATION OF TOPS OF EMBEDDED PLATES ARE ±¼"
   C. BASE PLATES TO BE PROVIDED BY CONCRETE CONTRACTOR
3. ANCHOR ROD, SEE DWG 0100-FD-001 FOR SCHEDULE.
4. ALL REBAR DIMENSIONS ARE TO OUTSIDE OF REBAR U.N.O.
5. SEE FOOTING AND FOUNDATION PLOT PLAN FOR T/CONC. ELEVATIONS.

PRELIMINARY
NOT FOR CONSTRUCTION

Footing Schedule Area 0300 10-27-14

NO.	DATE	REVISION	BY	CK'D	APP
–	–	–	–	–	–
HH	11-14-14		NLB	–	–

R&M ENGINEERING CONSULTANTS
SALT LAKE CITY, UTAH
(801)263-3419
13014

TESORO SAVAGE

THIS DRAWING CONTAINS PROPRIETARY AND PRIVILEGED INFORMATION OF TESORO SAVAGE PETROLEUM LLC AND SHALL NOT BE DISCLOSED OR USED FOR THE BENEFIT OF OTHERS WITHOUT PRIOR WRITTEN PERMISSION OF THE DRAWING OWNER.

CUSTOMER: TESORO SAVAGE PETROLEUM TERMINAL LLC

PROJECT: TESORO SAVAGE VANCOUVER ENERGY DISTRIBUTION TERMINAL LLC
PORT OF VANCOUVER, WASHINGTON

DESCRIPTION:
AREA 0300 PIPE FOOTING SCHEDULE
MK-PS-0300-F22 & F23

DESIGN:	START DATE: 08-04-13	SCALE:	NTS
DRAWN: PDM	PRINT DATE:	PROJECT MANAGER:	DC
CHECKED:	APPROVED:	SIZE:	24x36

DRAWING NUMBER	SHEET	REV.
0300-FD-030	1/1	HH

EX-0001-007598-PCE

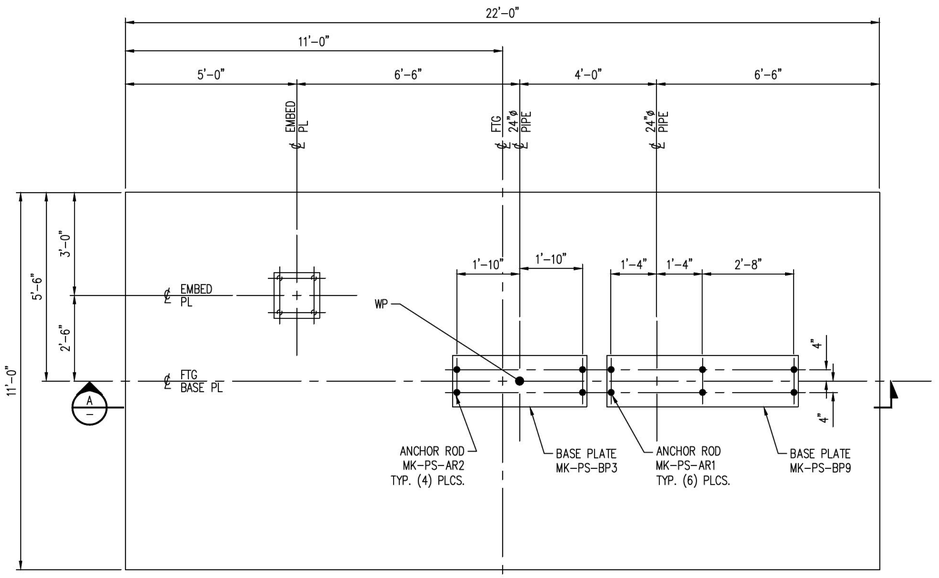

MK-PS-0300-F24
1/2"=1'-0"

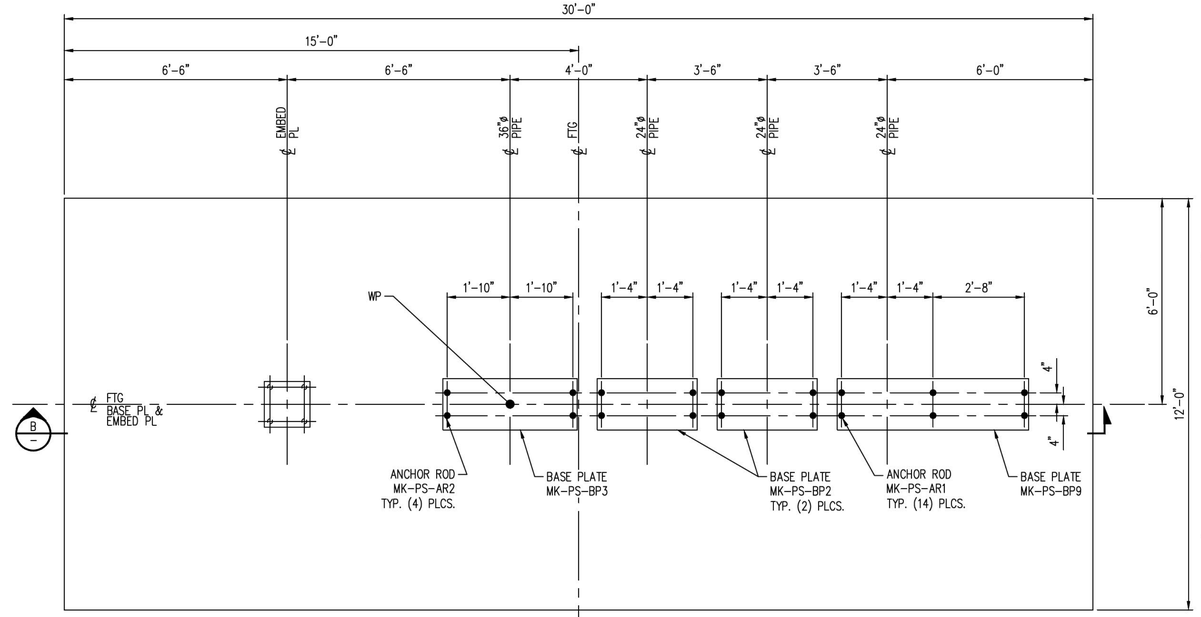

MK-PS-0300-F25
1/2"=1'-0"

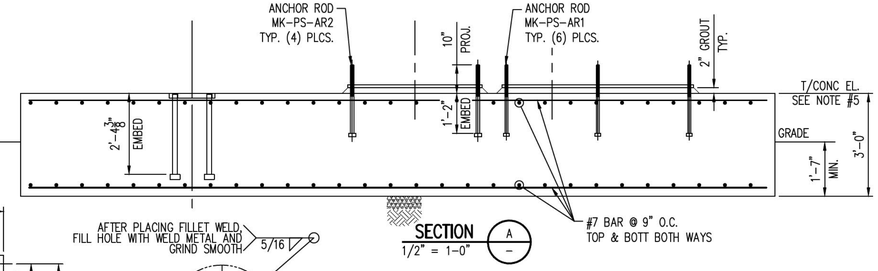

SECTION
1/2" = 1'-0" (A)

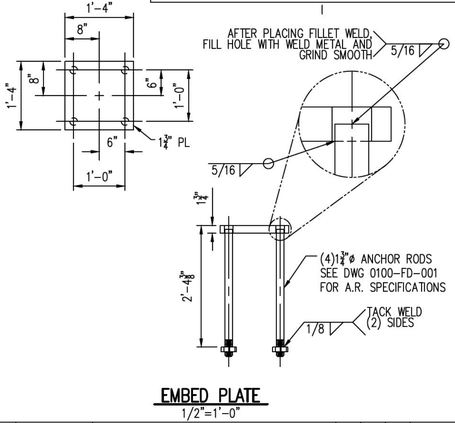

EMBED PLATE
1/2"=1'-0"

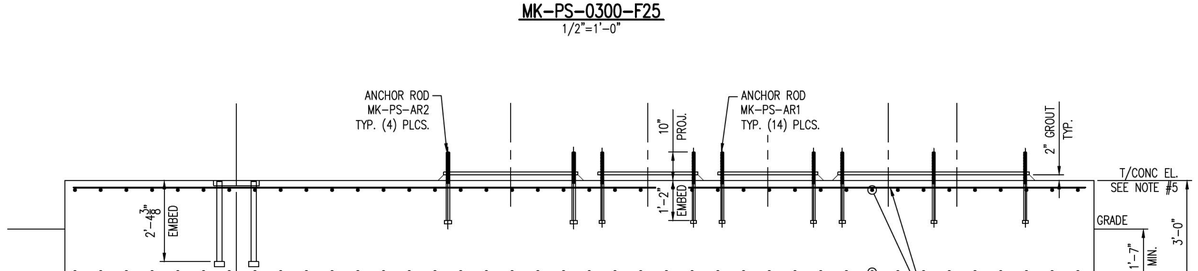

SECTION
1/2" = 1'-0" (B)

PRELIMINARY
NOT FOR CONSTRUCTION

NOTES:

1. FOR CONCRETE GENERAL NOTES SEE DWG 0100-FD-001.
2. BASE PLATE:
   A. SEE DWG 0100-FD-002 FOR DETAILS.
   B. TOLERANCE ON ELEVATION OF TOPS OF EMBEDDED PLATES ARE ±⅛"
   C. BASE PLATES TO BE PROVIDED BY CONCRETE CONTRACTOR
3. ANCHOR ROD, SEE DWG 0100-FD-001 FOR SCHEDULE.
4. ALL REBAR DIMENSIONS ARE TO OUTSIDE OF REBAR U.N.O.
5. SEE FOOTING AND FOUNDATION PLOT PLAN FOR T/CONC. ELEVATIONS.

NO.	DATE	REVISION	BY	CK'D	APP
–	–	–	–	–	–
HH	11-14-14		NLB	–	–

R&M ENGINEERING CONSULTANTS
SALT LAKE CITY, UTAH
(801)263-3419
13014

TESORO SAVAGE

THIS DRAWING CONTAINS PROPRIETARY AND PRIVILEGED INFORMATION OF TESORO SAVAGE PETROLEUM LLC AND SHALL NOT BE DISCLOSED OR USED FOR THE BENEFIT OF OTHERS WITHOUT PRIOR WRITTEN PERMISSION OF THE DRAWING OWNER.

CUSTOMER: TESORO SAVAGE PETROLEUM TERMINAL LLC

PROJECT: TESORO SAVAGE VANCOUVER ENERGY DISTRIBUTION TERMINAL LLC
PORT OF VANCOUVER, WASHINGTON

DESCRIPTION:
AREA 0300 PIPE FOOTING SCHEDULE
MK-PS-0300-F24 & F25

DESIGN:	START DATE: 08-04-13	SCALE:	NTS
DRAWN: PDM	PRINT DATE:	PROJECT MANAGER:	DC
CHECKED:	APPROVED:	SIZE:	24x36
DRAWING NUMBER		SHEET	REV.
0300-FD-031		1/1	HH

Footing Schedule Area 0300 10-27-14

EX-0001-007599-PCE

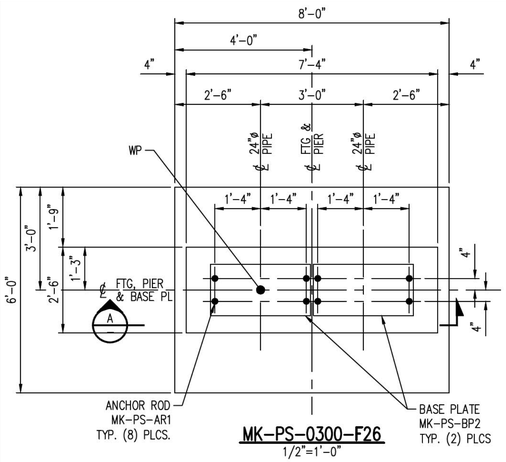

MK-PS-0300-F26
1/2"=1'-0"

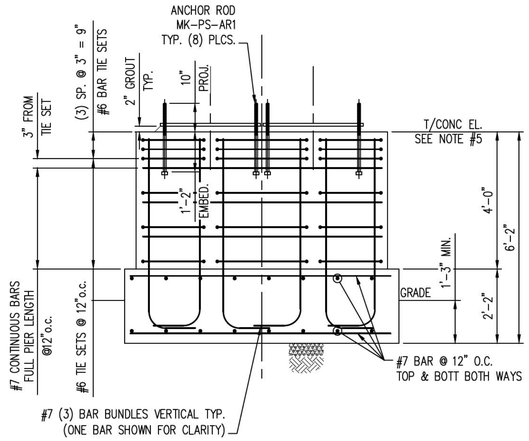

SECTION A
1/2" = 1-0"

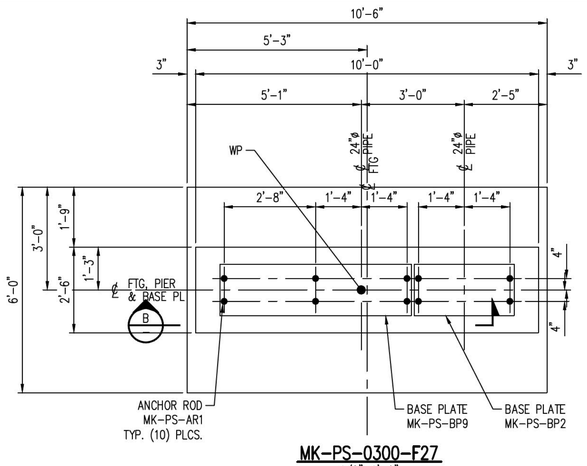

MK-PS-0300-F27
1/2"=1'-0"

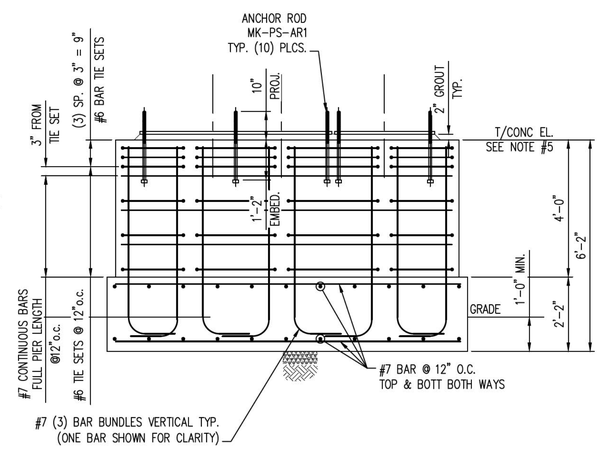

SECTION B
1/2" = 1-0"

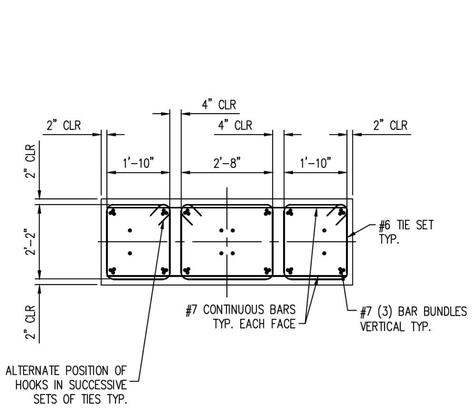

PIER REINFORCEMENT
1/2"=1'-0"

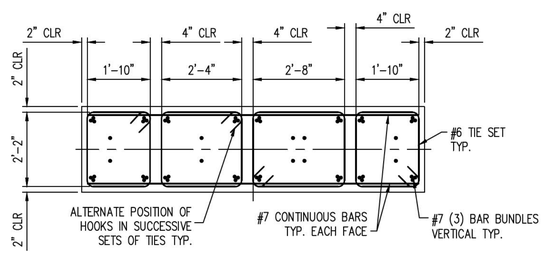

PIER REINFORCEMENT
1/2"=1'-0"

PRELIMINARY
NOT FOR CONSTRUCTION

NOTES:
1. FOR CONCRETE GENERAL NOTES SEE DWG 0100-FD-001.
2. BASE PLATE:
   A. SEE DWG 0100-FD-002 FOR DETAILS.
   B. TOLERANCE ON ELEVATION OF TOPS OF EMBEDDED PLATES ARE ±1/8"
   C. BASE PLATES TO BE PROVIDED BY CONCRETE CONTRACTOR
3. ANCHOR ROD, SEE DWG 0100-FD-001 FOR SCHEDULE.
4. ALL REBAR DIMENSIONS ARE TO OUTSIDE OF REBAR U.N.O.
5. SEE FOOTING AND FOUNDATION PLOT PLAN FOR T/CONC. ELEVATIONS.

NO.	DATE	REVISION	BY	CK'D	APP
–	–	–	–	–	–
HH	11-14-14		NLB	–	–

R&M ENGINEERING CONSULTANTS
SALT LAKE CITY, UTAH
(801)263-3419
13014

TESORO SAVAGE

THIS DRAWING CONTAINS PROPRIETARY AND PRIVILEGED INFORMATION OF TESORO SAVAGE PETROLEUM LLC AND SHALL NOT BE DISCLOSED OR USED FOR THE BENEFIT OF OTHERS WITHOUT PRIOR WRITTEN PERMISSION OF THE DRAWING OWNER.

CUSTOMER: TESORO SAVAGE PETROLEUM TERMINAL LLC

PROJECT: TESORO SAVAGE VANCOUVER ENERGY DISTRIBUTION TERMINAL LLC
PORT OF VANCOUVER, WASHINGTON

DESCRIPTION:
AREA 0300 PIPE FOOTING SCHEDULE
MK-PS-0300-F26 & F27

DESIGN:		START DATE:	08-04-13	SCALE:	NTS
DRAWN:	PDM	PRINT DATE:		PROJECT MANAGER:	DC
CHECKED:		APPROVED:		SIZE:	24x36

DRAWING NUMBER	SHEET	REV.
0300-FD-032	1/1	HH

Footing Schedule Area 0300 10-27-14

EX-0001-007600-PCE

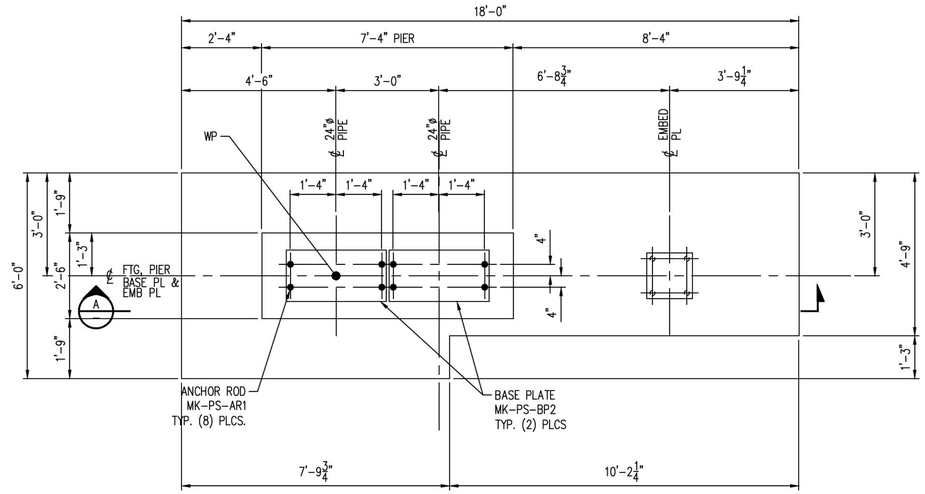

MK-PS-0300-F28

1/2"=1'-0"

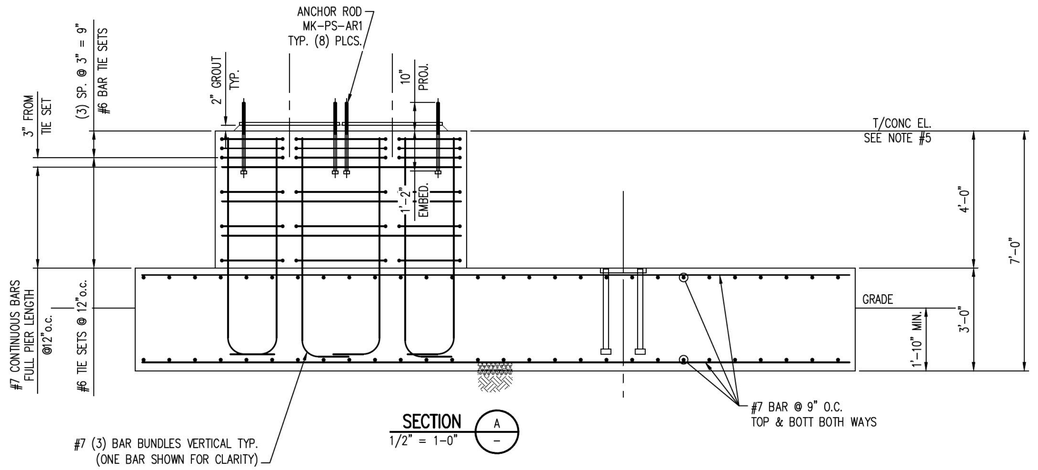

SECTION A

1/2" = 1-0"

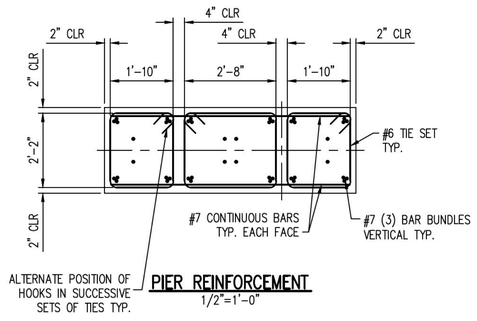

PIER REINFORCEMENT

1/2"=1'-0"

PRELIMINARY

NOT FOR CONSTRUCTION

NOTES:

1. FOR CONCRETE GENERAL NOTES SEE DWG 0100-FD-001.
2. BASE PLATE:
   A. SEE DWG 0100-FD-002 FOR DETAILS.
   B. TOLERANCE ON ELEVATION OF TOPS OF EMBEDDED PLATES ARE ±⅛"
   C. BASE PLATES TO BE PROVIDED BY CONCRETE CONTRACTOR
3. ANCHOR ROD, SEE DWG 0100-FD-001 FOR SCHEDULE.
4. ALL REBAR DIMENSIONS ARE TO OUTSIDE OF REBAR U.N.O.
5. SEE FOOTING AND FOUNDATION PLOT PLAN FOR T/CONC. ELEVATIONS.

NO.	DATE	REVISION	BY	CK'D	APP
–	–	–	–	–	–
HH	11-14-14		NLB	–	–

Footing Schedule Area 0300 10-27-14

R&M ENGINEERING CONSULTANTS
SALT LAKE CITY, UTAH
(801)263-3419

13014

TESORO SAVAGE™

THIS DRAWING CONTAINS PROPRIETARY AND PRIVILEGED INFORMATION OF TESORO SAVAGE PETROLEUM LLC AND SHALL NOT BE DISCLOSED OR USED FOR THE BENEFIT OF OTHERS WITHOUT PRIOR WRITTEN PERMISSION OF THE DRAWING OWNER.

CUSTOMER: TESORO SAVAGE PETROLEUM TERMINAL LLC

PROJECT: TESORO SAVAGE VANCOUVER ENERGY DISTRIBUTION TERMINAL LLC
PORT OF VANCOUVER, WASHINGTON

DESCRIPTION: AREA 0300 PIPE FOOTING SCHEDULE
MK-PS-0300-F28

DESIGN:		START DATE: 08-04-13		SCALE:	NTS
DRAWN:	PDM	PRINT DATE:		PROJECT MANAGER:	DC
CHECKED:		APPROVED:		SIZE:	24x36
DRAWING NUMBER				SHEET	REV.
0300-FD-033				1/1	HH

EX-0001-007601-PCE

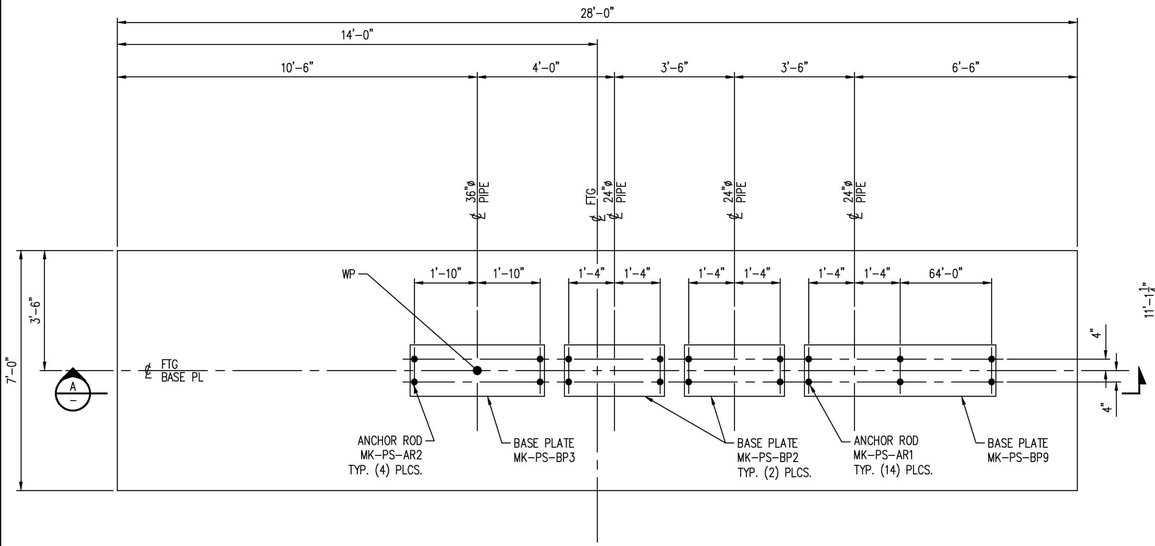

MK-PS-0300-F29
1/2"=1'-0"

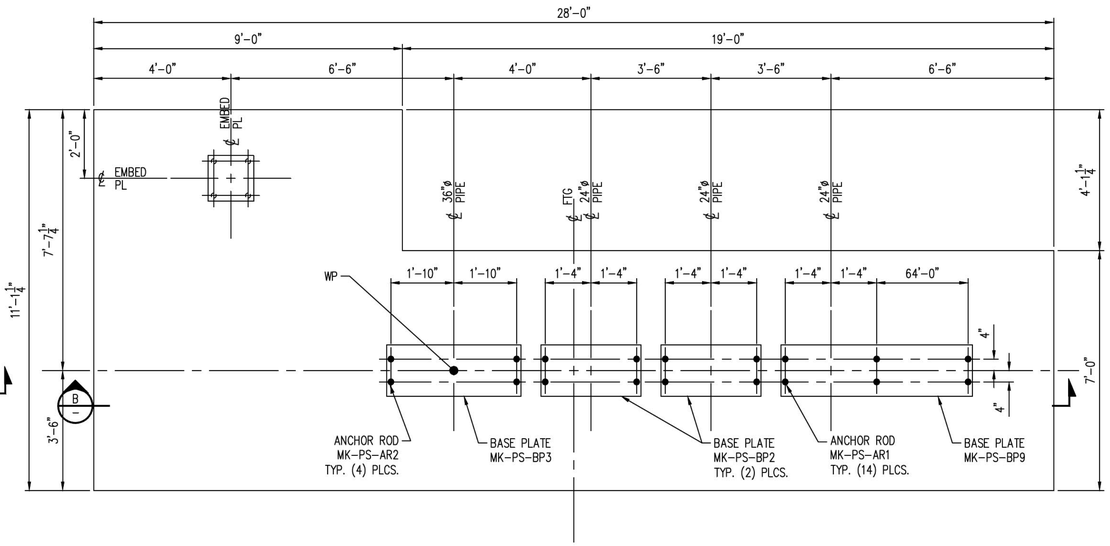

MK-PS-0300-F30
1/2"=1'-0"

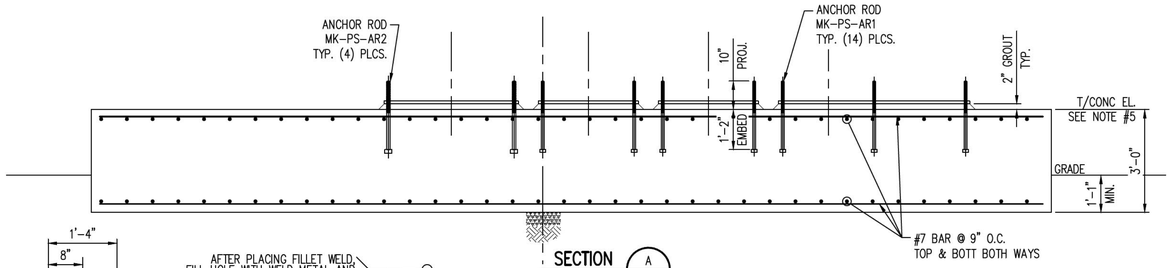

SECTION A
1/2" = 1-0"

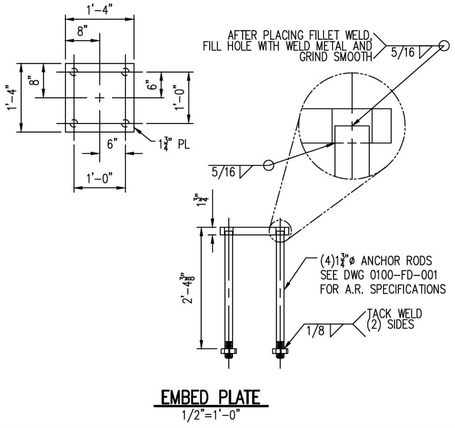

EMBED PLATE
1/2"=1'-0"

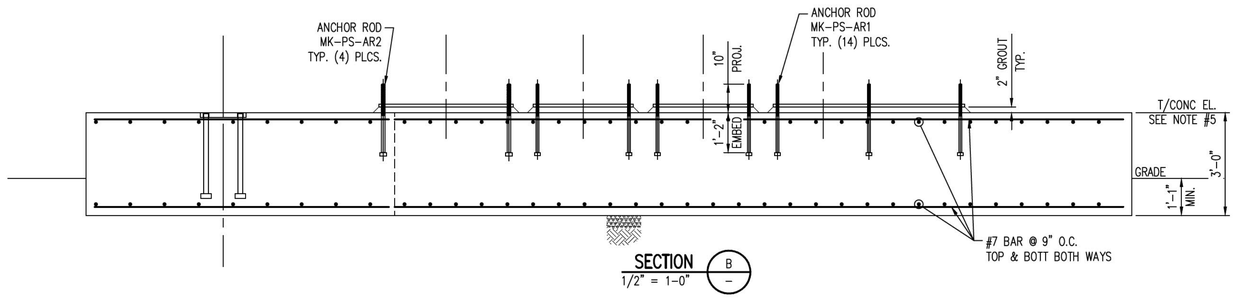

SECTION B
1/2" = 1-0"

PRELIMINARY
NOT FOR CONSTRUCTION

NOTES:

1. FOR CONCRETE GENERAL NOTES SEE DWG 0100-FD-001.
2. BASE PLATE:
   A. SEE DWG 0100-FD-002 FOR DETAILS.
   B. TOLERANCE ON ELEVATION OF TOPS OF EMBEDDED PLATES ARE ±½".
   C. BASE PLATES TO BE PROVIDED BY CONCRETE CONTRACTOR
3. ANCHOR ROD, SEE DWG 0100-FD-001 FOR SCHEDULE.
4. ALL REBAR DIMENSIONS ARE TO OUTSIDE OF REBAR U.N.O.
5. SEE FOOTING AND FOUNDATION PLOT PLAN FOR T/CONC. ELEVATIONS.

NO.	DATE	REVISION	BY	CK'D	APP
–	–	–	–	–	–
HH	11-14-14		NLB	–	–

R&M ENGINEERING CONSULTANTS
SALT LAKE CITY, UTAH
(801)263-3419
13014

TESORO SAVAGE

THIS DRAWING CONTAINS PROPRIETARY AND PRIVILEGED INFORMATION OF TESORO SAVAGE PETROLEUM LLC AND SHALL NOT BE DISCLOSED OR USED FOR THE BENEFIT OF OTHERS WITHOUT PRIOR WRITTEN PERMISSION OF THE DRAWING OWNER.

CUSTOMER: TESORO SAVAGE PETROLEUM TERMINAL LLC

PROJECT: TESORO SAVAGE VANCOUVER ENERGY DISTRIBUTION TERMINAL LLC
PORT OF VANCOUVER, WASHINGTON

DESCRIPTION: AREA 0300 PIPE FOOTING SCHEDULE
MK-PS-0300-F29 & F30

DESIGN:	START DATE: 08-04-13	SCALE:	NTS
DRAWN: PDM	PRINT DATE:	PROJECT MANAGER:	DC
CHECKED:	APPROVED:	SIZE:	24x36
DRAWING NUMBER		SHEET	REV.
0300-FD-034		1/1	HH

Footing Schedule Area 0300 10-27-14

EX-0001-007602-PCE

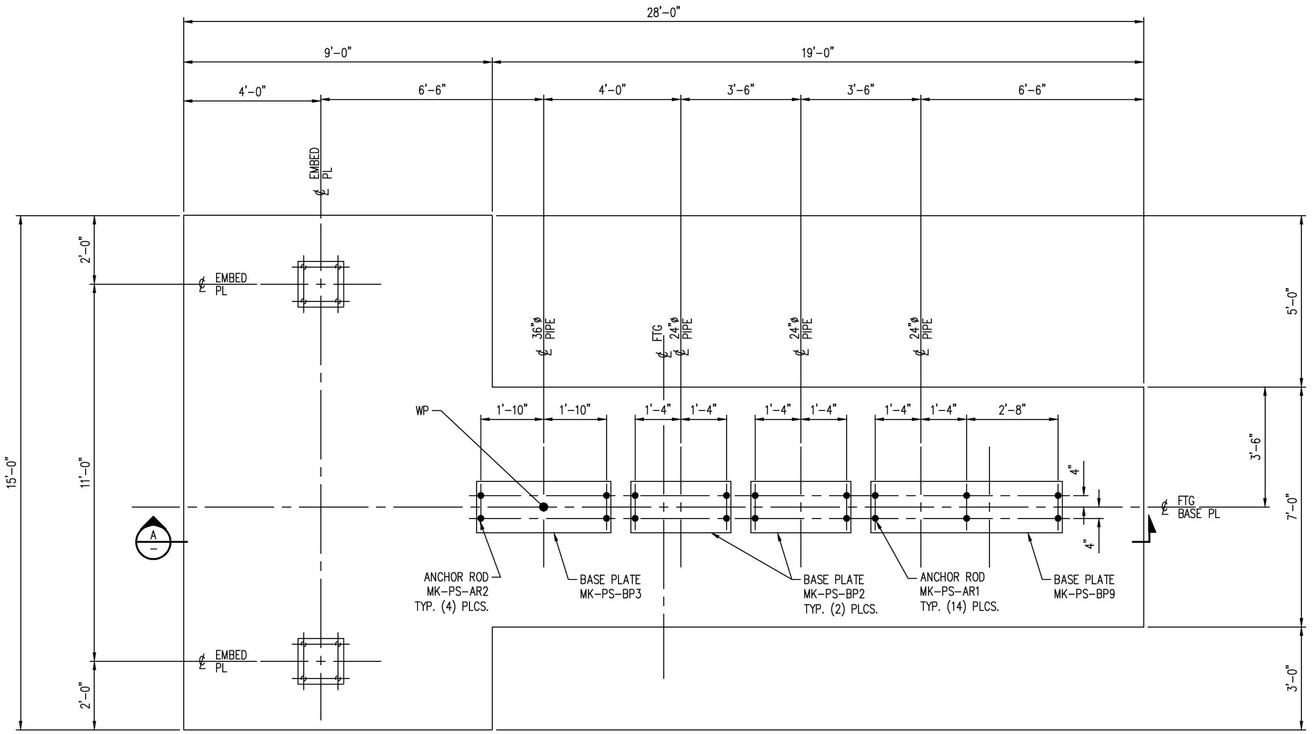

MK-PS-0300-F31
1/2"=1'-0"

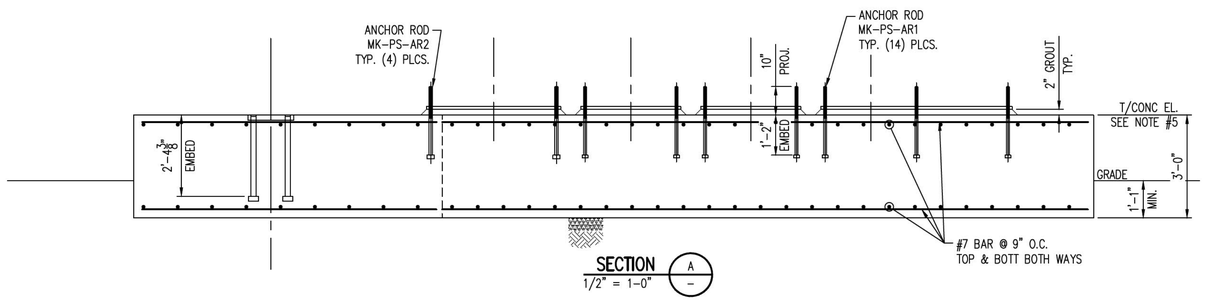

SECTION A
1/2" = 1-0"

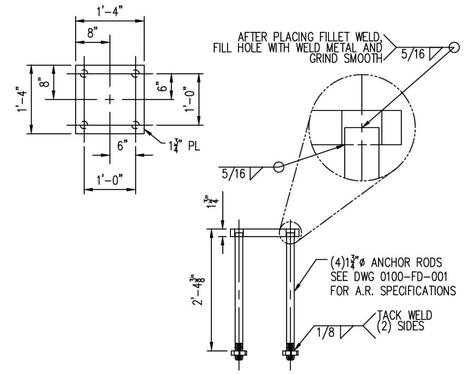

EMBED PLATE
1/2"=1'-0"

NOTES:

1. FOR CONCRETE GENERAL NOTES SEE DWG 0100-FD-001.
2. BASE PLATE:
   A. SEE DWG 0100-FD-002 FOR DETAILS.
   B. TOLERANCE ON ELEVATION OF TOPS OF EMBEDDED PLATES ARE ±⅛"
   C. BASE PLATES TO BE PROVIDED BY CONCRETE CONTRACTOR
3. ANCHOR ROD, SEE DWG 0100-FD-001 FOR SCHEDULE.
4. ALL REBAR DIMENSIONS ARE TO OUTSIDE OF REBAR U.N.O.
5. SEE FOOTING AND FOUNDATION PLOT PLAN FOR T/CONC. ELEVATIONS.

PRELIMINARY
NOT FOR CONSTRUCTION

NO.	DATE	REVISION	BY	CK'D	APP
–	–	–	–	–	–
HH	11-14-14		NLB	–	–

Footing Schedule Area 0300 10-27-14

R&M ENGINEERING CONSULTANTS
SALT LAKE CITY, UTAH
(801)263-3419
13014

TESORO SAVAGE

THIS DRAWING CONTAINS PROPRIETARY AND PRIVILEGED INFORMATION OF TESORO SAVAGE PETROLEUM LLC AND SHALL NOT BE DISCLOSED OR USED FOR THE BENEFIT OF OTHERS WITHOUT PRIOR WRITTEN PERMISSION OF THE DRAWING OWNER.

CUSTOMER: TESORO SAVAGE PETROLEUM TERMINAL LLC

PROJECT: TESORO SAVAGE VANCOUVER ENERGY DISTRIBUTION TERMINAL LLC
PORT OF VANCOUVER, WASHINGTON

DESCRIPTION:
AREA 0300 PIPE FOOTING SCHEDULE
MK-PS-0300-F31

DESIGN:	START DATE: 08-04-13	SCALE:	NTS
DRAWN: PDM	PRINT DATE:	PROJECT MANAGER:	DC
CHECKED:	APPROVED:	SIZE:	24x36

DRAWING NUMBER	SHEET	REV.
0300-FD-035	1/1	HH

EX-0001-007603-PCE

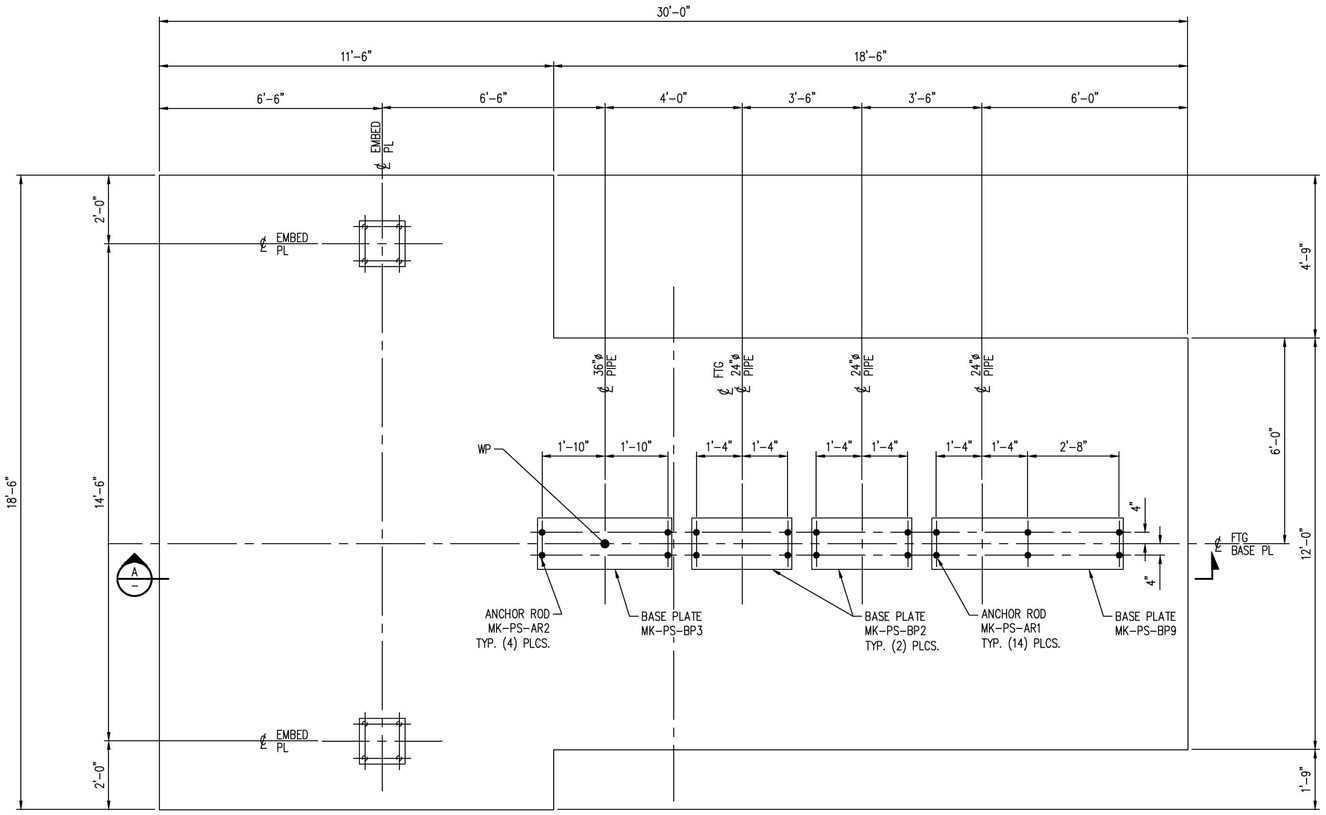

MK-PS-0300-F32
1/2"=1'-0"

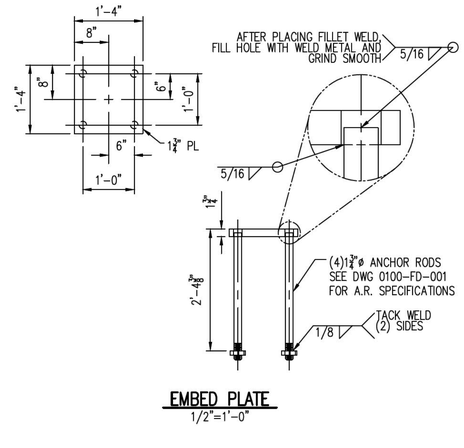

EMBED PLATE
1/2"=1'-0"

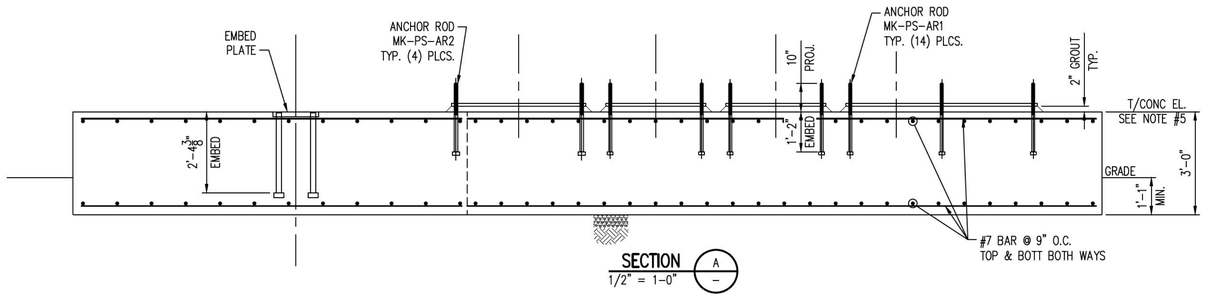

SECTION
1/2" = 1-0"

PRELIMINARY
NOT FOR CONSTRUCTION

NOTES:

1. FOR CONCRETE GENERAL NOTES SEE DWG 0100-FD-001.
2. BASE PLATE:
   A. SEE DWG 0100-FD-002 FOR DETAILS.
   B. TOLERANCE ON ELEVATION OF TOPS OF EMBEDDED PLATES ARE ±⅛"
   C. BASE PLATES TO BE PROVIDED BY CONCRETE CONTRACTOR
3. ANCHOR ROD, SEE DWG 0100-FD-001 FOR SCHEDULE.
4. ALL REBAR DIMENSIONS ARE TO OUTSIDE OF REBAR U.N.O.
5. SEE FOOTING AND FOUNDATION PLOT PLAN FOR T/CONC. ELEVATIONS.

NO.	DATE	REVISION	BY	CK'D	APP
–	–	–	–	–	–
HH	11-14-14		NLB	–	–

R&M ENGINEERING CONSULTANTS
SALT LAKE CITY, UTAH
(801)263-3419
13014

TESORO SAVAGE

THIS DRAWING CONTAINS PROPRIETARY AND PRIVILEGED INFORMATION OF TESORO SAVAGE PETROLEUM LLC AND SHALL NOT BE DISCLOSED OR USED FOR THE BENEFIT OF OTHERS WITHOUT PRIOR WRITTEN PERMISSION OF THE DRAWING OWNER.

CUSTOMER: TESORO SAVAGE PETROLEUM TERMINAL LLC

PROJECT: TESORO SAVAGE VANCOUVER ENERGY DISTRIBUTION TERMINAL LLC
PORT OF VANCOUVER, WASHINGTON

DESCRIPTION:
AREA 0300 PIPE FOOTING SCHEDULE
MK-PS-0300-F32

DESIGN:	START DATE: 08-04-13	SCALE:	NTS
DRAWN: PDM	PRINT DATE:	PROJECT MANAGER:	DC
CHECKED:	APPROVED:	SIZE:	24x36
DRAWING NUMBER		SHEET	REV.
0300-FD-036		1/1	HH

Footing Schedule Area 0300 10-27-14

EX-0001-007604-PCE

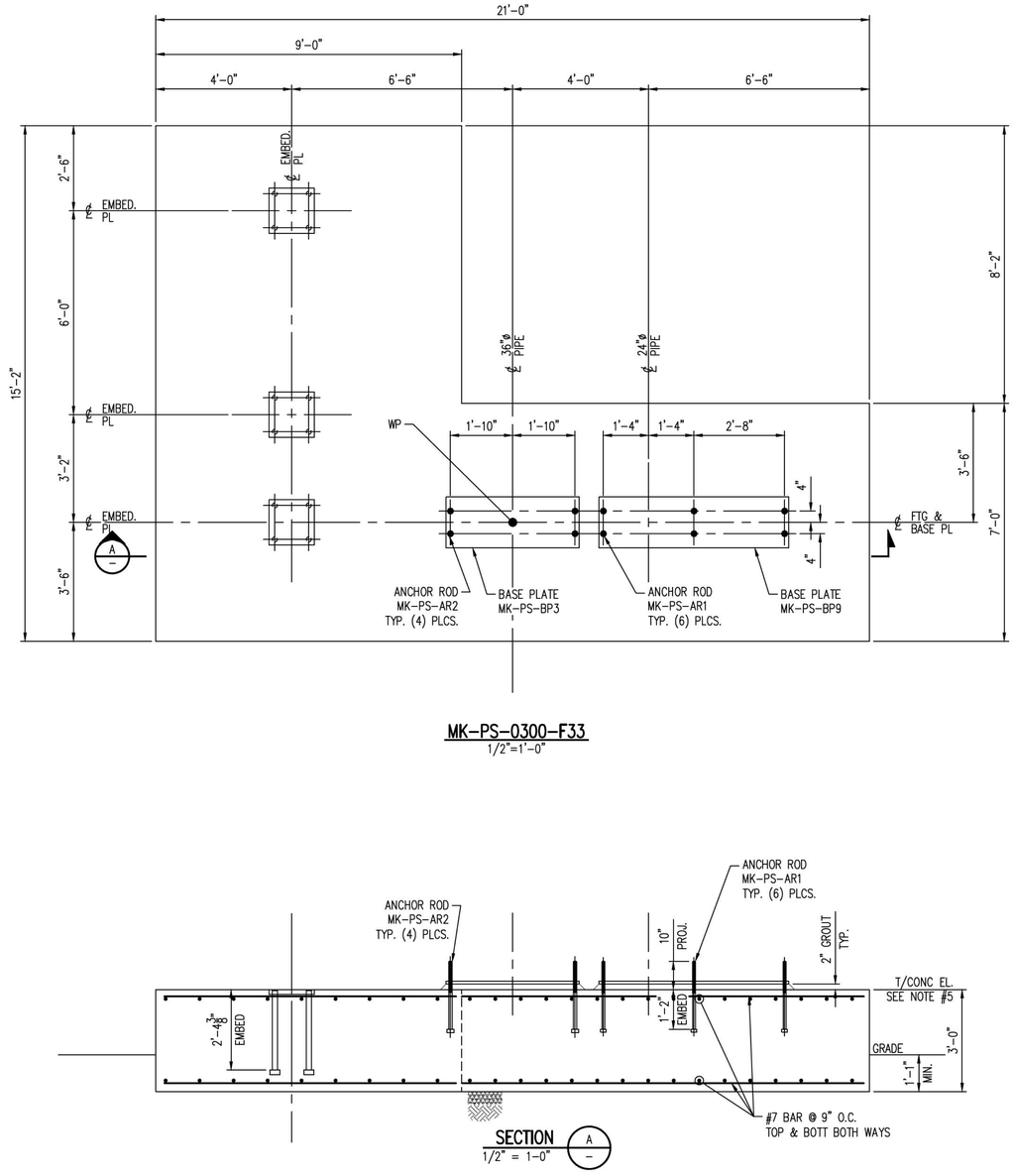

MK-PS-0300-F33
1/2"=1'-0"

SECTION A
1/2" = 1-0"

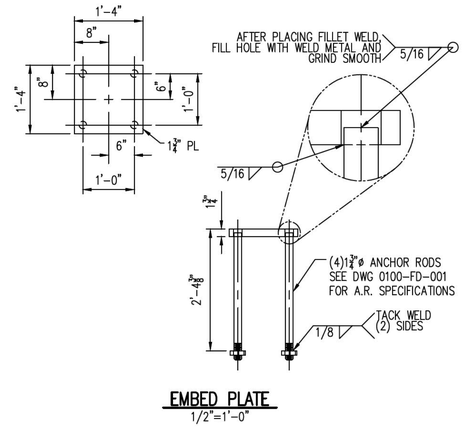

EMBED PLATE
1/2"=1'-0"

PRELIMINARY
NOT FOR CONSTRUCTION

NOTES:

1. FOR CONCRETE GENERAL NOTES SEE DWG 0100-FD-001.
2. BASE PLATE:
   A. SEE DWG 0100-FD-002 FOR DETAILS.
   B. TOLERANCE ON ELEVATION OF TOPS OF EMBEDDED PLATES ARE ±1/8"
   C. BASE PLATES TO BE PROVIDED BY CONCRETE CONTRACTOR
3. ANCHOR ROD, SEE DWG 0100-FD-001 FOR SCHEDULE.
4. ALL REBAR DIMENSIONS ARE TO OUTSIDE OF REBAR U.N.O.
5. SEE FOOTING AND FOUNDATION PLOT PLAN FOR T/CONC. ELEVATIONS.

NO.	DATE	REVISION	BY	CK'D	APP
–	–	–	–	–	–
HH	11-14-14		NLB	–	–

Footing Schedule Area 0300 10-27-14

R&M ENGINEERING CONSULTANTS
SALT LAKE CITY, UTAH
(801)263-3419
13014

TESORO SAVAGE

THIS DRAWING CONTAINS PROPRIETARY AND PRIVILEGED INFORMATION OF TESORO SAVAGE PETROLEUM LLC AND SHALL NOT BE DISCLOSED OR USED FOR THE BENEFIT OF OTHERS WITHOUT PRIOR WRITTEN PERMISSION OF THE DRAWING OWNER.

CUSTOMER: TESORO SAVAGE PETROLEUM TERMINAL LLC

PROJECT: TESORO SAVAGE VANCOUVER ENERGY DISTRIBUTION TERMINAL LLC
PORT OF VANCOUVER, WASHINGTON

DESCRIPTION:
AREA 0300 PIPE FOOTING SCHEDULE
MK-PS-0300-F33

DESIGN:	START DATE: 08-04-13	SCALE:	NTS
DRAWN: PDM	PRINT DATE:	PROJECT MANAGER:	DC
CHECKED:	APPROVED:	SIZE:	24x36

DRAWING NUMBER	SHEET	REV.
0300-FD-037	1/1	HH

EX-0001-007605-PCE

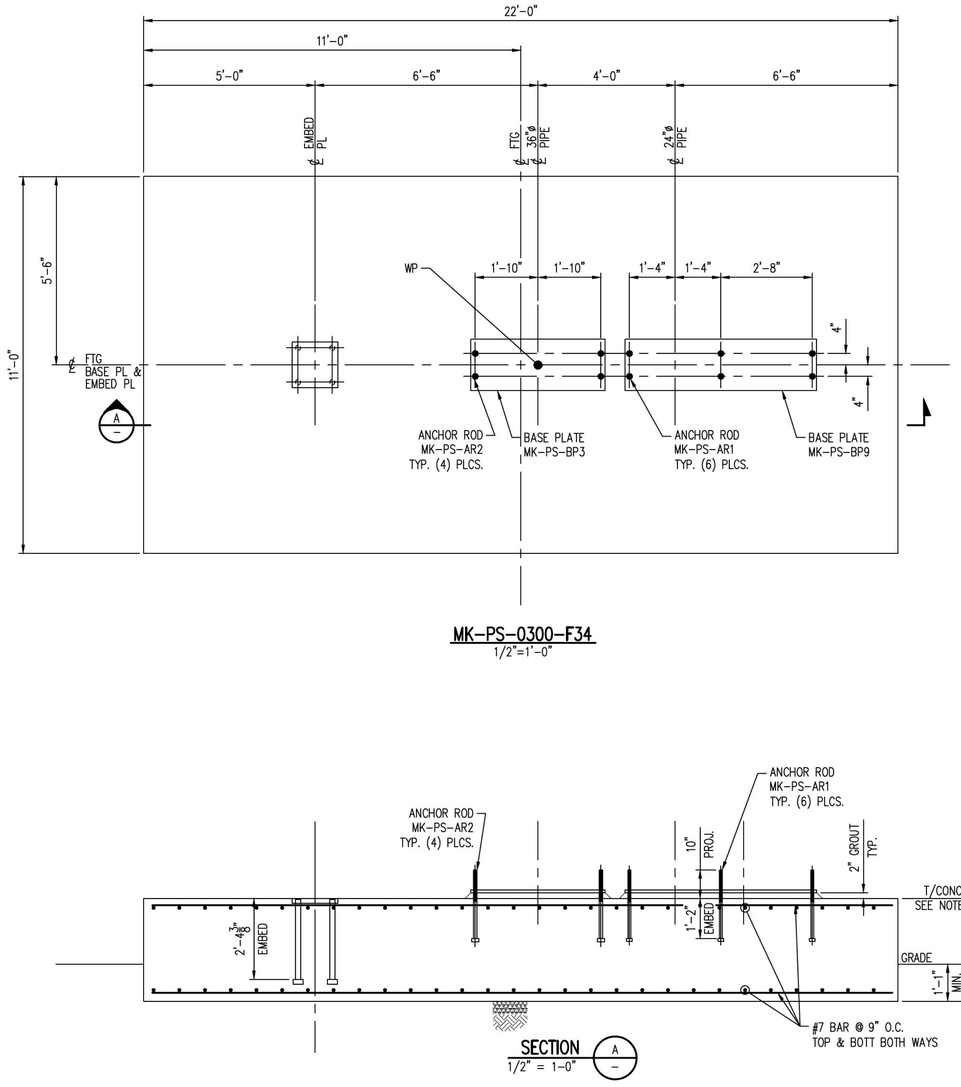

MK-PS-0300-F34
1/2"=1'-0"

SECTION
1/2" = 1-0"

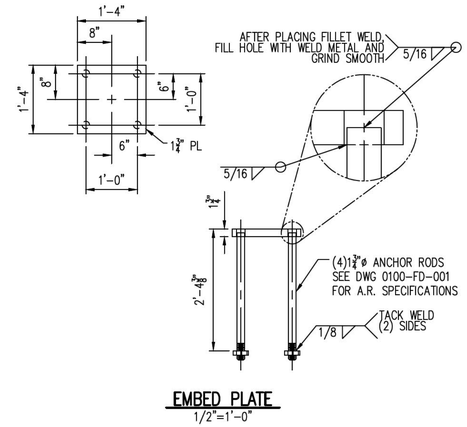

EMBED PLATE
1/2"=1'-0"

PRELIMINARY
NOT FOR CONSTRUCTION

NOTES:

1. FOR CONCRETE GENERAL NOTES SEE DWG 0100-FD-001.
2. BASE PLATE:
   A. SEE DWG 0100-FD-002 FOR DETAILS.
   B. TOLERANCE ON ELEVATION OF TOPS OF EMBEDDED PLATES ARE ±⅛"
   C. BASE PLATES TO BE PROVIDED BY CONCRETE CONTRACTOR
3. ANCHOR ROD, SEE DWG 0100-FD-001 FOR SCHEDULE.
4. ALL REBAR DIMENSIONS ARE TO OUTSIDE OF REBAR U.N.O.
5. SEE FOOTING AND FOUNDATION PLOT PLAN FOR T/CONC. ELEVATIONS.

NO.	DATE	REVISION	BY	CK'D	APP
–	–	–	–	–	–
HH	11-14-14		NLB	–	–

R&M ENGINEERING CONSULTANTS
SALT LAKE CITY, UTAH
(801)263-3419
13014

TESORO SAVAGE™

THIS DRAWING CONTAINS PROPRIETARY AND PRIVILEGED INFORMATION OF TESORO SAVAGE PETROLEUM LLC AND SHALL NOT BE DISCLOSED OR USED FOR THE BENEFIT OF OTHERS WITHOUT PRIOR WRITTEN PERMISSION OF THE DRAWING OWNER.

CUSTOMER: TESORO SAVAGE PETROLEUM TERMINAL LLC

PROJECT: TESORO SAVAGE VANCOUVER ENERGY DISTRIBUTION TERMINAL LLC
PORT OF VANCOUVER, WASHINGTON

DESCRIPTION: AREA 0300 PIPE FOOTING SCHEDULE
MK-PS-0300-F34

DESIGN:		START DATE: 08-04-13		SCALE:	NTS
DRAWN:	PDM	PRINT DATE:		PROJECT MANAGER:	DC
CHECKED:		APPROVED:		SIZE:	24x36
DRAWING NUMBER				SHEET	REV.
0300-FD-038				1/1	HH

Footing Schedule Area 0300 10-27-14

EX-0001-007606-PCE

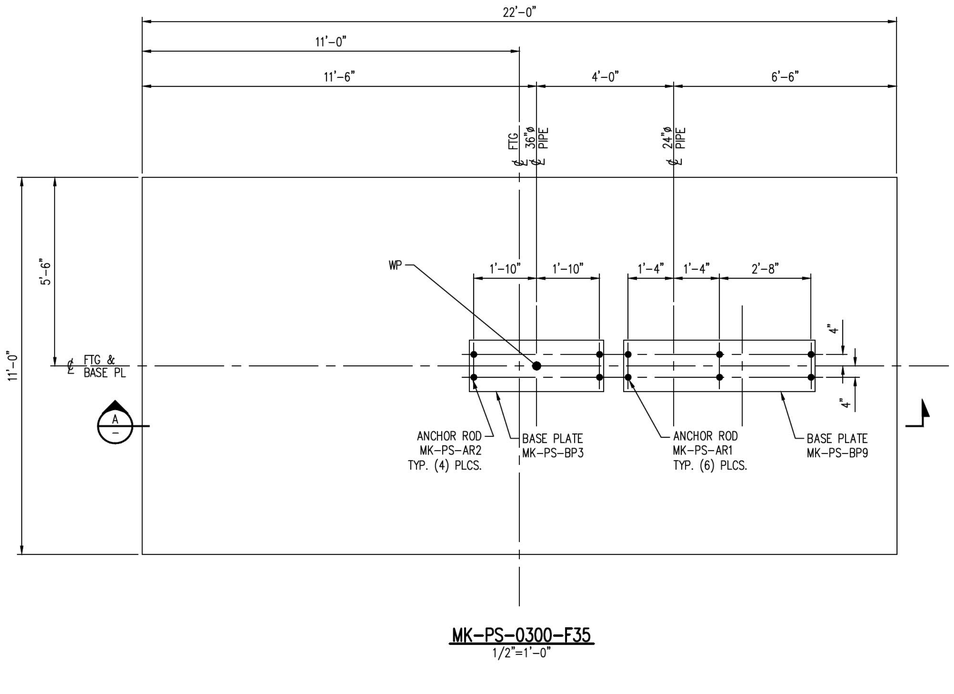

MK-PS-0300-F35
1/2"=1'-0"

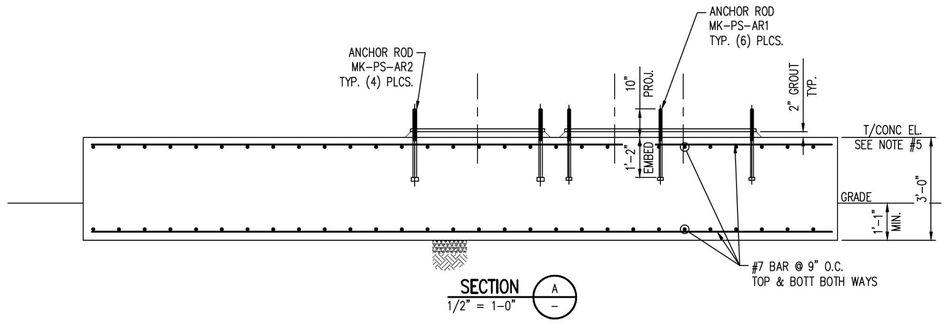

SECTION A –
1/2" = 1-0"

PRELIMINARY
NOT FOR CONSTRUCTION

NOTES:
1. FOR CONCRETE GENERAL NOTES SEE DWG 0100-FD-001.
2. BASE PLATE:
   A. SEE DWG 0100-FD-002 FOR DETAILS.
   B. TOLERANCE ON ELEVATION OF TOPS OF EMBEDDED PLATES ARE ±1/8"
   C. BASE PLATES TO BE PROVIDED BY CONCRETE CONTRACTOR
3. ANCHOR ROD, SEE DWG 0100-FD-001 FOR SCHEDULE.
4. ALL REBAR DIMENSIONS ARE TO OUTSIDE OF REBAR U.N.O.
5. SEE FOOTING AND FOUNDATION PLOT PLAN FOR T/CONC. ELEVATIONS.

NO.	DATE	REVISION	BY	CK'D	APP
–	–	–	–	–	–
HH	11-14-14		NLB	–	–

R&M ENGINEERING CONSULTANTS
SALT LAKE CITY, UTAH
(801)263-3419
13014

THIS DRAWING CONTAINS PROPRIETARY AND PRIVILEGED INFORMATION OF TESORO SAVAGE PETROLEUM LLC AND SHALL NOT BE DISCLOSED OR USED FOR THE BENEFIT OF OTHERS WITHOUT PRIOR WRITTEN PERMISSION OF THE DRAWING OWNER.

CUSTOMER: TESORO SAVAGE PETROLEUM TERMINAL LLC

PROJECT: TESORO SAVAGE VANCOUVER ENERGY DISTRIBUTION TERMINAL LLC
PORT OF VANCOUVER, WASHINGTON

DESCRIPTION: AREA 0300 PIPE FOOTING SCHEDULE
MK-PS-0300-F35

DESIGN:	START DATE: 08-04-13	SCALE:	NTS
DRAWN: PDM	PRINT DATE:	PROJECT MANAGER:	DC
CHECKED:	APPROVED:	SIZE:	24x36

DRAWING NUMBER	SHEET	REV.
0300-FD-039	1/1	HH

Footing Schedule Area 0300 10-27-14

EX-0001-007607-PCE

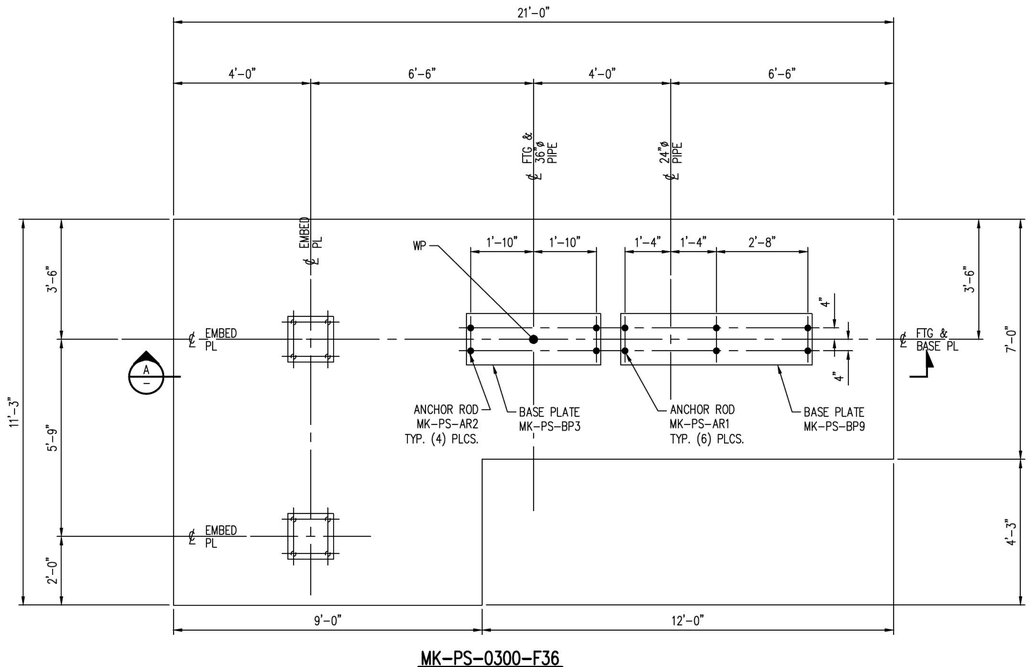

MK-PS-0300-F36
1/2"=1'-0"

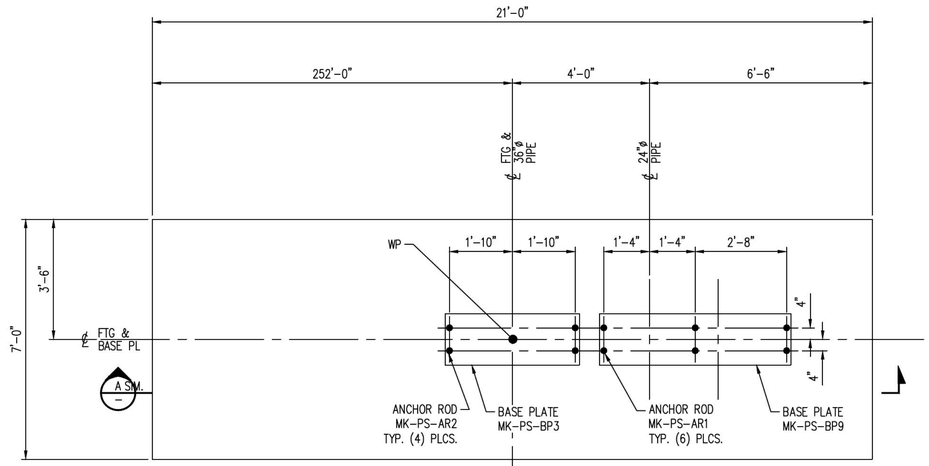

MK-PS-0300-F37
1/2"=1'-0"

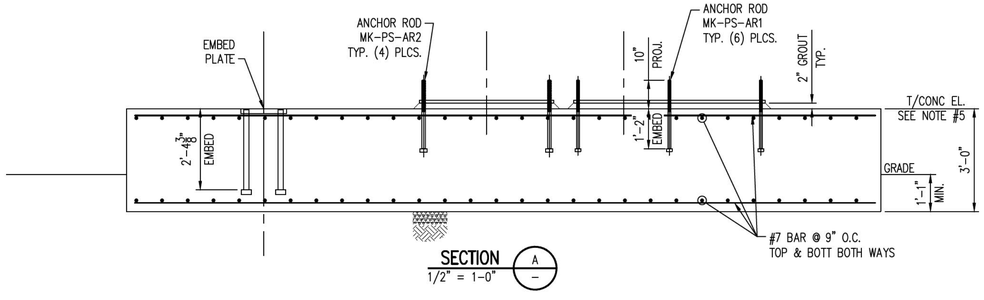

SECTION A
1/2" = 1-0"

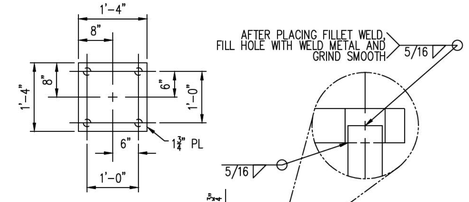

EMBED PLATE
1/2"=1'-0"

PRELIMINARY
NOT FOR CONSTRUCTION

NOTES:

1. FOR CONCRETE GENERAL NOTES SEE DWG 0100-FD-001.
2. BASE PLATE:
   A. SEE DWG 0100-FD-002 FOR DETAILS.
   B. TOLERANCE ON ELEVATION OF TOPS OF EMBEDDED PLATES ARE ±⅛"
   C. BASE PLATES TO BE PROVIDED BY CONCRETE CONTRACTOR
3. ANCHOR ROD, SEE DWG 0100-FD-001 FOR SCHEDULE.
4. ALL REBAR DIMENSIONS ARE TO OUTSIDE OF REBAR U.N.O.
5. SEE FOOTING AND FOUNDATION PLOT PLAN FOR T/CONC. ELEVATIONS.

NO.	DATE	REVISION	BY	CK'D	APP
–	–	–	–	–	–
HH	11-14-14		NLB	–	–

R&M ENGINEERING CONSULTANTS
SALT LAKE CITY, UTAH
(801)263-3419

13014

TESORO SAVAGE

THIS DRAWING CONTAINS PROPRIETARY AND PRIVILEGED INFORMATION OF TESORO SAVAGE PETROLEUM LLC AND SHALL NOT BE DISCLOSED OR USED FOR THE BENEFIT OF OTHERS WITHOUT PRIOR WRITTEN PERMISSION OF THE DRAWING OWNER.

CUSTOMER: TESORO SAVAGE PETROLEUM TERMINAL LLC

PROJECT: TESORO SAVAGE VANCOUVER ENERGY DISTRIBUTION TERMINAL LLC
PORT OF VANCOUVER, WASHINGTON

DESCRIPTION:
AREA 0300 PIPE FOOTING SCHEDULE
MK-PS-0300-F36 & F37

DESIGN:		START DATE:	08-04-13	SCALE:	NTS
DRAWN:	PDM	PRINT DATE:		PROJECT MANAGER:	DC
CHECKED:		APPROVED:		SIZE:	24x36

DRAWING NUMBER	SHEET	REV.
0300-FD-040	1/1	HH

Footing Schedule Area 0300 10-27-14

EX-0001-007608-PCE

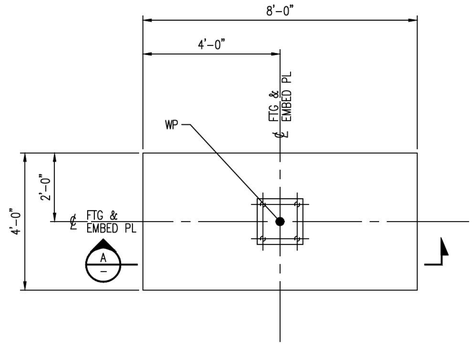

MK-PS-0300-F38
1/2"=1'-0"

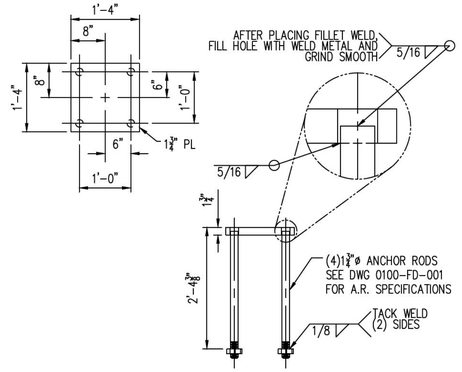

EMBED PLATE
1/2"=1'-0"

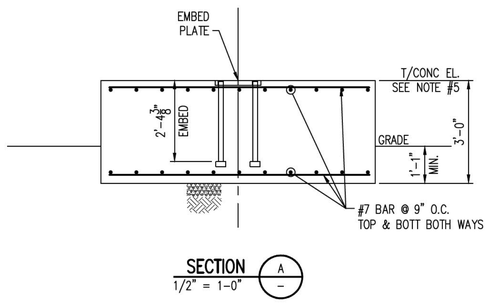

SECTION A–
1/2" = 1-0"

PRELIMINARY
NOT FOR CONSTRUCTION

NOTES:

1. FOR CONCRETE GENERAL NOTES SEE DWG 0100-FD-001.
2. BASE PLATE:
   A. SEE DWG 0100-FD-002 FOR DETAILS.
   B. TOLERANCE ON ELEVATION OF TOPS OF EMBEDDED PLATES ARE ±⅛"
   C. BASE PLATES TO BE PROVIDED BY CONCRETE CONTRACTOR
3. ANCHOR ROD, SEE DWG 0100-FD-001 FOR SCHEDULE.
4. ALL REBAR DIMENSIONS ARE TO OUTSIDE OF REBAR U.N.O.
5. SEE FOOTING AND FOUNDATION PLOT PLAN FOR T/CONC. ELEVATIONS.

NO.	DATE	REVISION	BY	CK'D	APP
–	–	–	–	–	–
HH	11-14-14		NLB	–	–

Footing Schedule Area 0300 10-27-14

R&M ENGINEERING CONSULTANTS
SALT LAKE CITY, UTAH
(801)263-3419

13014

TESORO SAVAGE

THIS DRAWING CONTAINS PROPRIETARY AND PRIVILEGED INFORMATION OF TESORO SAVAGE PETROLEUM LLC AND SHALL NOT BE DISCLOSED OR USED FOR THE BENEFIT OF OTHERS WITHOUT PRIOR WRITTEN PERMISSION OF THE DRAWING OWNER.

CUSTOMER: TESORO SAVAGE PETROLEUM TERMINAL LLC

PROJECT: TESORO SAVAGE VANCOUVER ENERGY DISTRIBUTION TERMINAL LLC
PORT OF VANCOUVER, WASHINGTON

DESCRIPTION:
AREA 0300 PIPE FOOTING SCHEDULE
MK-PS-0300-F38

DESIGN:	START DATE: 08-04-13	SCALE:	NTS
DRAWN: PDM	PRINT DATE:	PROJECT MANAGER:	DC
CHECKED:	APPROVED:	SIZE:	24x36
DRAWING NUMBER		SHEET	REV.
0300-FD-041		1/1	HH

EX-0001-007609-PCE

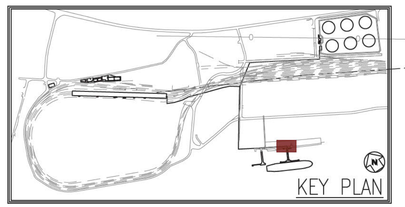

PRELIMINARY
NOT FOR CONSTRUCTION

MVCU PAD MK-TS-0400-F1
SEE DWG 0100-FD-007 FOR DETAILS

N.121063.20
E.1072424.92

S62° 35' 00"E

19'-6"

N.121047.40
E.1072398.98

MVCU BLOWER PAD MK-TS-0400-F2
SEE DWG 0100-FD-007 FOR DETAILS

90°

90°

9'-0"

11'-0"

S62° 35' 00"E

20'-0"

11'-8 3/8"

18'-0"

18'-0"

18'-0"

BLOWER FEED PIPE SUPPORT
MK-DP-0400-F3
TYP. (5) PLCS.
SEE DWG 0100-FD-008

N.121029.00
E.1072408.27

20'-0"

20'-0"

SD

SD

N30° 10' 23"E

20'-0"

N.121015.65
E.1072304.37

4'-0"

4'-0"

12'-0"

20'-0"

14'-3"

N.121009.15
E.1072285.44

S60° 07' 19"E

N.120994.92
E.1072361.53

MVCU FEED PIPE SUPPORT
& CABLE TRAY
MK-DP-0400-F2
TYP. (15) PLCS.
SEE DWG 0100-FD-008

AREA 0400 E-HOUSE
MK-DP-0400-F1
TYP. (10) PLCS.
SEE DWG 0100-FD-008 FOR DETAILS

N.121012.40
E.1072282.07

MK-0400-PS-F1
SEE DWG 0400-FD-015 FOR DETAILS

MK-0400-PS-F2
SEE DWG 0400-FD-015 FOR DETAILS

35'-0"

N27° 18' 12"E

N.121023.29
E.1072200.23

8'-0"

11'-6"

10'-10"

8'-11"

S60° 06' 13"E

S60° 06' 11"E

11'-0"

6'-2"

10'-0"

5'-5"

S62° 43' 24"E

14'-0"

9'-0"

12'-0"

12'-0"

8'-8"

S61° 13' 44"E

10'-4"

N.120944.81
E.1072337.42

DRILLED PIER CABLE TRAY SUPPORT
MK-DP-0400-F4 TYP. (7) PLCS.
SEE DWG 0100-FD-008 FOR DETAILS

S59° 15' 55"E

16'-4"

S62° 43' 24"E

5'-6"

10'-0"

7'-6"

N.121004.26
E.1072196.42

S59° 15' 55"E

N.120989.58
E.1072212.77

N.120979.92
E.1072241.68

TRANSFER PIPELINE
BRIDGE #5

AREA 0400 FIRE PUMP & FOAM BLDG
MK-DP-0400-F5
TYP. (10) PLCS.
SEE DWG 0100-FD-008 FOR DETAILS

OHW

PLAN
N.T.S.

N

13014 FOUNDATION PLOT PLAN 11-12-14

NO.	DATE	REVISION	BY	CK'D	APP
–	–	–	–	–	–
HH	11-14-14		NLB	–	–

R&M ENGINEERING CONSULTANTS
SALT LAKE CITY, UTAH
(801)263-3419

13014

TESORO SAVAGE

THIS DRAWING CONTAINS PROPRIETARY AND PRIVILEGED INFORMATION OF TESORO SAVAGE PETROLEUM LLC AND SHALL NOT BE DISCLOSED OR USED FOR THE BENEFIT OF OTHERS WITHOUT PRIOR WRITTEN PERMISSION OF THE DRAWING OWNER.

CUSTOMER: TESORO SAVAGE PETROLEUM TERMINAL LLC

PROJECT: TESORO SAVAGE VANCOUVER ENERGY DISTRIBUTION TERMINAL LLC
PORT OF VANCOUVER, WASHINGTON

DESCRIPTION:
AREA 0400
FOOTING & FOUNDATION PLOT PLAN

DESIGN:		START DATE: 07-31-13	SCALE: AS SHOWN
DRAWN: PDM		PRINT DATE:	PROJECT MANAGER: DC
CHECKED:		APPROVED:	SIZE: 24x36
DRAWING NUMBER			SHEET / REV.
0400-FD-001			1/1 HH

EX-0001-007610-PCE

FOOTING SCHEDULE

FTG. MK.	FTG. TYPE	LOCATION OR DWG. NO.	CONCRETE DIMENSIONS									ANCHOR RODS				ELEVATIONS		REINFORCING STEEL							REMARKS	MADE BY	CHK'D BY
			A	B	C	D	E	F	G	H	PIER TYPE	J	K	L	M	N	P	X_1	X_2	X_3	X_4	X_5	X_6	X_7			
MK-0400-PS-F1	B	0400-FD-001	17'-6"	10'-0"	5'-0"	7'-6"	3'-0"	3'-0"		2'-6"	1	1'-3"	1'-3"	5"	MK-PS-AR16	SEE FOOTING AND FOUNDATION PLOT PLANS FOR T/CONCRETE ELEVATIONS		#7 @ 9"O.C.	#7 @ 9"O.C.	#7 @ 9"O.C.	#7 @ 9"O.C.	#6 (4-BAR BUNDLE)	#6 @ 12"O.C.	#6 @ 2½"O.C.	TRANSFER PIPELINE BRIDGE #5 - NORTH BENT	MWD	
MK-0400-PS-F2	C	0400-FD-001	17'-6"	20'-0"	5'-0"	7'-6"	3'-0"	3'-0"	10'-0"	2'-6"	1	1'-3"	1'-3"	5"	MK-PS-AR16			#7 @ 9"O.C.	#7 @ 9"O.C.	#7 @ 9"O.C.	#7 @ 9"O.C.	#6 (4-BAR BUNDLE)	#6 @ 12"O.C.	#6 @ 2½"O.C.	TRANSFER PIPELINE BRIDGE #5 - SOUTH TOWER	MWD	

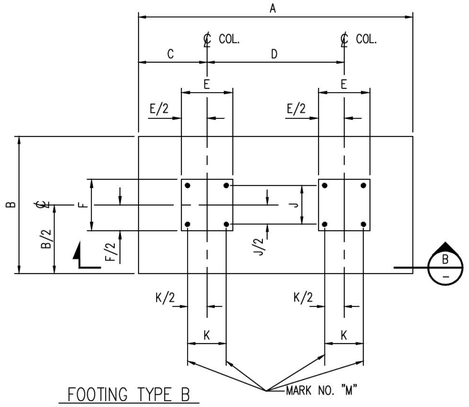

FOOTING TYPE B
(FOR ORIENTATION SEE PLAN)

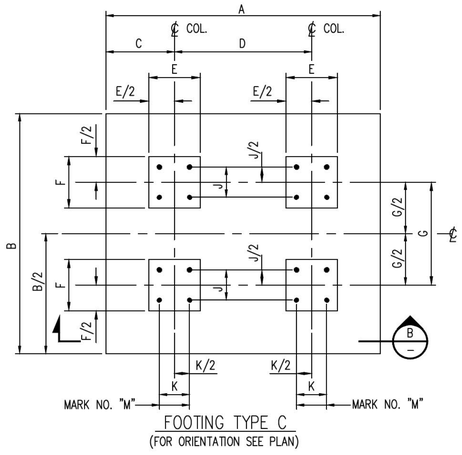

FOOTING TYPE C
(FOR ORIENTATION SEE PLAN)

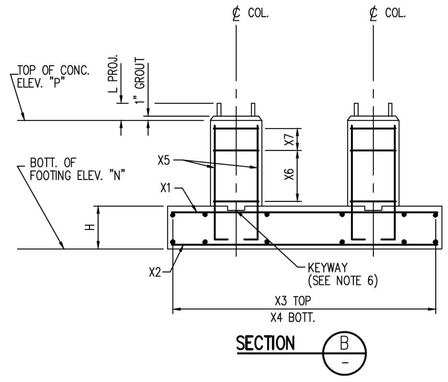

SECTION

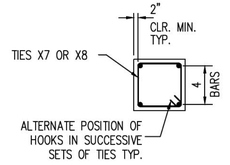

PIER TYPE 1

PRELIMINARY
NOT FOR CONSTRUCTION

NOTES:

1. FOR CONCRETE GENERAL NOTES SEE DWG 0100-FD-001.
2. TOLERANCE ON ELEVATION OF TOPS OF EMBEDDED PLATES ARE ±1".
3. FOR ANCHOR ROD SCHEDULE SEE DWG 0100-FD-001.
4. ALL DOWELS TO HAVE STD. 90° HOOKS IN FTG PER ACI 318 LATEST EDITION.
5. ALL CLEARANCES 2" MIN. U.N.O.
6. FOR KEYWAY SEE GENERAL CONC. NOTE #8 ON DWG 0100-FD-001.

Footing Schedule Area 0400

NO.	DATE	REVISION	BY	CK'D	APP
HH	11/14/14		NLB	–	–

R&M ENGINEERING CONSULTANTS
SALT LAKE CITY, UTAH
(801)263-3419

13014

TESORO SAVAGE

THIS DRAWING CONTAINS PROPRIETARY AND PRIVILEGED INFORMATION OF TESORO SAVAGE PETROLEUM LLC AND SHALL NOT BE DISCLOSED OR USED FOR THE BENEFIT OF OTHERS WITHOUT PRIOR WRITTEN PERMISSION OF THE DRAWING OWNER.

CUSTOMER: TESORO SAVAGE PETROLEUM TERMINAL LLC

PROJECT: TESORO SAVAGE VANCOUVER ENERGY DISTRIBUTION TERMINAL LLC
PORT OF VANCOUVER, WASHINGTON

DESCRIPTION: AREA 0400 PIPE BRIDGE FOOTING SCHEDULE
DETAILS, SECTION VIEWS & TABLE

DESIGN:		START DATE: 10/28/14	SCALE: NTS
DRAWN: PDM		PRINT DATE: 11/14/14	PROJECT MANAGER: DC
CHECKED:		APPROVED:	SIZE: 24x36
DRAWING NUMBER			SHEET 1/1 REV. HH
0400-FD-015			

EX-0001-007611-PCE

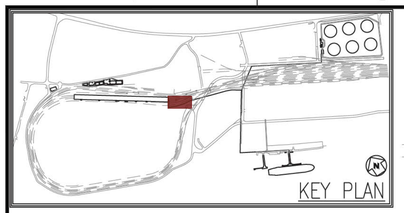

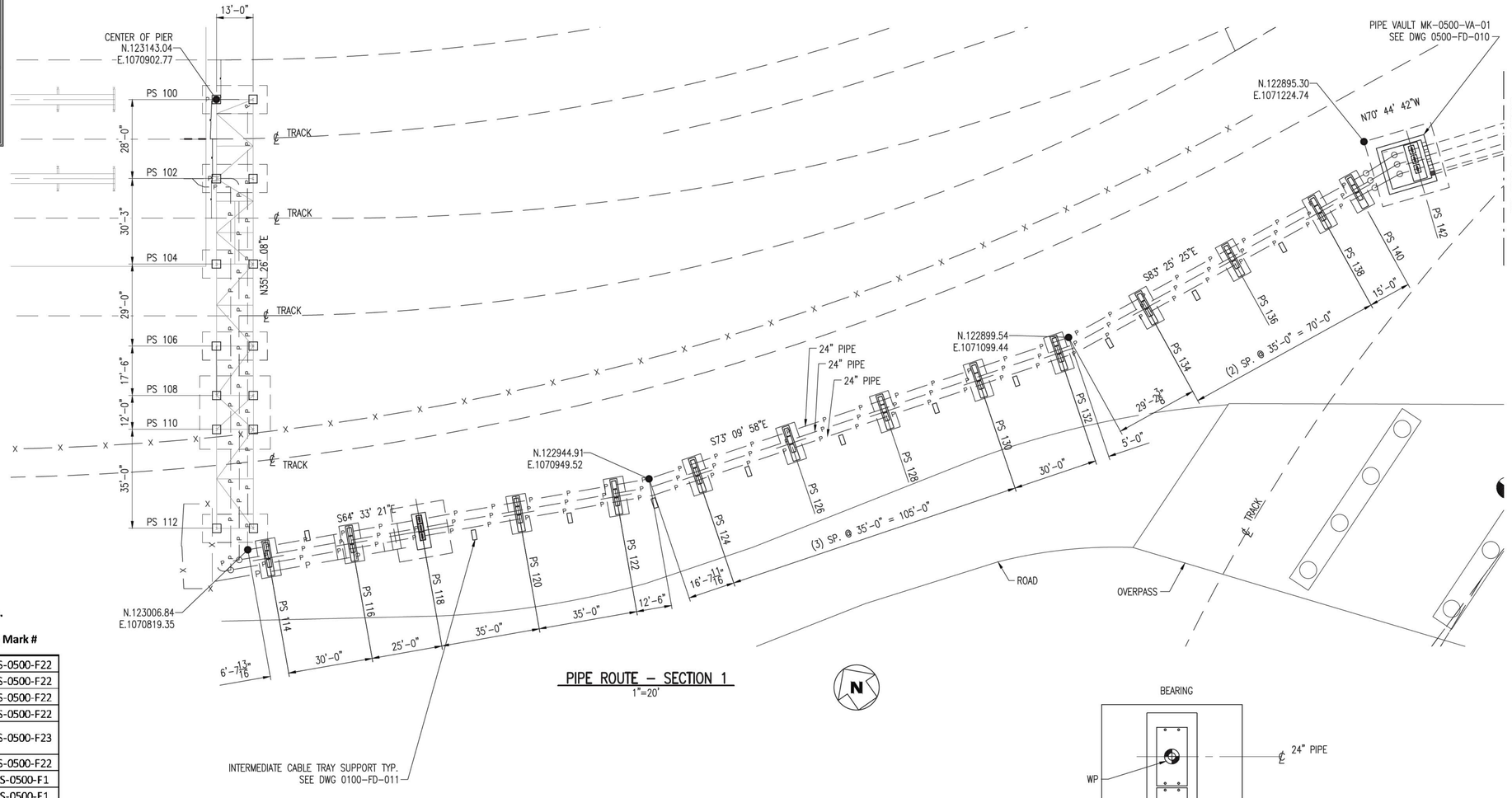

PIPE ROUTE – SECTION 1
1"=20'

PIPE SUPPORT TABLE
FOR DETAILS SEE DWG 0500-FD-020 U.N.O.

Pipe Support #	Type	B/Pipe	T/Conc. Pier	B/Conc. Ftg.	Ftg Mark #
PS 100	Elevated	57.83'	34.00'	28.00'	MK-PS-0500-F22
PS 102	Elevated	57.83'	34.00'	28.00'	MK-PS-0500-F22
PS 104	Elevated	57.83'	34.00'	28.00'	MK-PS-0500-F22
PS 106	Elevated	57.83'	33.00'	27.00'	MK-PS-0500-F22
PS 108	Elevated	57.83'	33.00'	27.00'	MK-PS-0500-F23
PS 110	Elevated	57.83'			
PS 112	Elevated	57.83'	33.00'	27.00'	MK-PS-0500-F22
PS 114	Support	34.00'	33.42'	26.25'	MK-PS-0500-F1
PS 116	Support	34.00'	33.42'	26.25'	MK-PS-0500-F1
PS 118	Anchor	34.00'	33.42'	22.58'	MK-PS-0500-F2
PS 120	Support	34.00'	33.42'	26.25'	MK-PS-0500-F1
PS 122	Support	34.00'	33.42'	26.25'	MK-PS-0500-F1
PS 124	Support	34.00'	33.42'	26.25'	MK-PS-0500-F1
PS 126	Support	34.00'	33.42'	26.25'	MK-PS-0500-F1
PS 128	Support	34.00'	33.42'	26.25'	MK-PS-0500-F1
PS 130	Support	34.00'	33.42'	26.25'	MK-PS-0500-F1
PS 132	Support	34.00'	33.42'	26.25'	MK-PS-0500-F1
PS 134	Support	34.00'	33.42'	26.25'	MK-PS-0500-F1
PS 136	Support	34.00'	33.42'	26.25'	MK-PS-0500-F1
PS 138	Support	34.00'	33.42'	26.25'	MK-PS-0500-F1
PS 140	Support	34.00'	33.42'	26.25'	MK-PS-0500-F1
PS 142	Vault Anchor	SEE DWG 0500-FD-010			MK-VA-0500-01

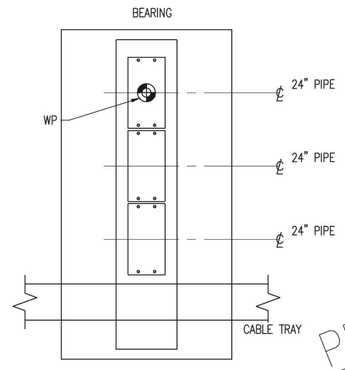

PIPE SUPPORT LEGEND
N.T.S.

PRELIMINARY
NOT FOR CONSTRUCTION

NO.	DATE	REVISION	BY	CK'D	APP
–	–	–	–	–	–
HH	11–14–14		NLB	–	–

R&M ENGINEERING CONSULTANTS
SALT LAKE CITY, UTAH
(801)263-3419

13014

TESORO SAVAGE

THIS DRAWING CONTAINS PROPRIETARY AND PRIVILEGED INFORMATION OF TESORO SAVAGE PETROLEUM LLC AND SHALL NOT BE DISCLOSED OR USED FOR THE BENEFIT OF OTHERS WITHOUT PRIOR WRITTEN PERMISSION OF THE DRAWING OWNER.

CUSTOMER: TESORO SAVAGE PETROLEUM TERMINAL LLC

PROJECT: TESORO SAVAGE VANCOUVER ENERGY DISTRIBUTION TERMINAL LLC
PORT OF VANCOUVER, WASHINGTON

DESCRIPTION: AREA 0500 – FOOTING & FOUNDATION PLOT PLAN
PIPE ROUTE – SECTION 1

DESIGN:		START DATE:	06–07–13	SCALE:	AS SHOWN
DRAWN:	JBH	PRINT DATE:		PROJECT MANAGER:	DC
CHECKED:		APPROVED:		SIZE:	24x36

DRAWING NUMBER	SHEET	REV.
0500–FD–001	1/1	HH

13014 FOUNDATION PLOT PLAN Area 0500 11-14-14

EX-0001-007612-PCE

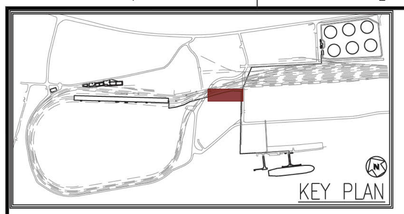

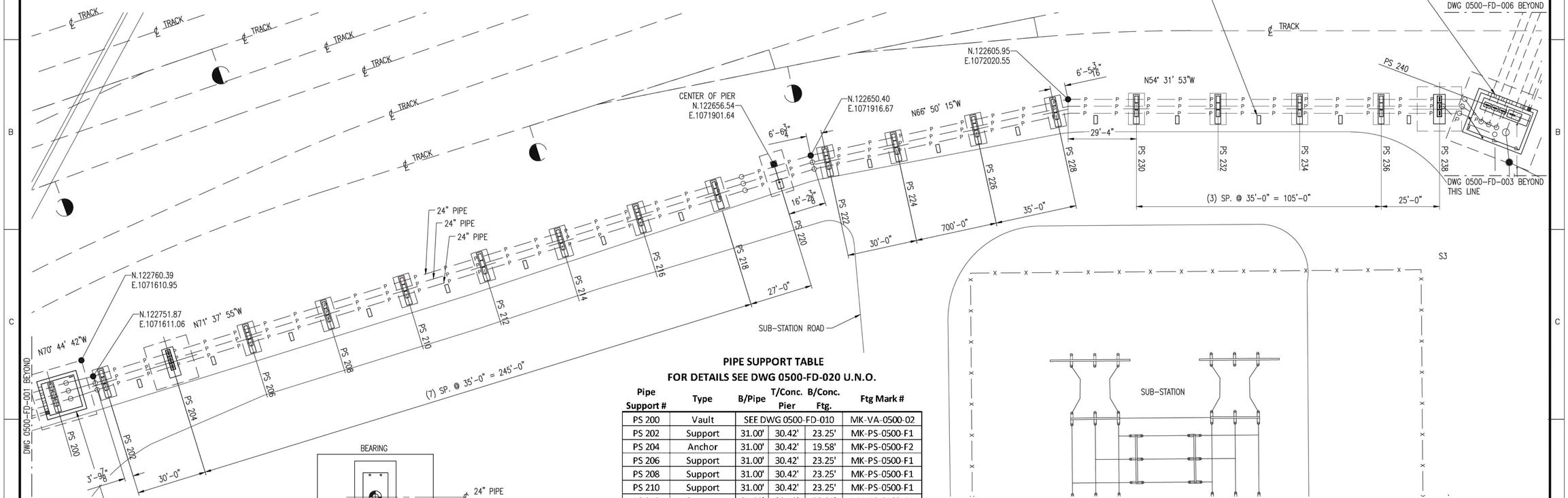

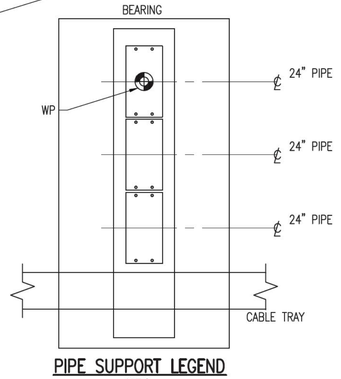

PIPE SUPPORT LEGEND
N.T.S.

PIPE SUPPORT TABLE
FOR DETAILS SEE DWG 0500-FD-020 U.N.O.

Pipe Support #	Type	B/Pipe	T/Conc. Pier	B/Conc. Ftg.	Ftg Mark #
PS 200	Vault	SEE DWG 0500-FD-010			MK-VA-0500-02
PS 202	Support	31.00'	30.42'	23.25'	MK-PS-0500-F1
PS 204	Anchor	31.00'	30.42'	19.58'	MK-PS-0500-F2
PS 206	Support	31.00'	30.42'	23.25'	MK-PS-0500-F1
PS 208	Support	31.00'	30.42'	23.25'	MK-PS-0500-F1
PS 210	Support	31.00'	30.42'	23.25'	MK-PS-0500-F1
PS 212	Support	31.00'	30.42'	23.25'	MK-PS-0500-F1
PS 214	Support	31.00'	30.42'	23.25'	MK-PS-0500-F1
PS 216	Support	31.00'	30.42'	23.25'	MK-PS-0500-F1
PS 218	Support	31.00'	30.42'	23.25'	MK-PS-0500-F1
PS 220	Elevated	51.00'	27.42'	21.08'	MK-PS-0500-F24
PS 222	Support	28.00'	27.42'	20.25'	MK-PS-0500-F1
PS 224	Support	28.00'	27.42'	20.25'	MK-PS-0500-F1
PS 226	Support	28.00'	27.42'	20.25'	MK-PS-0500-F1
PS 228	Support	28.00'	27.42'	20.25'	MK-PS-0500-F1
PS 230	Support	28.00'	27.42'	20.25'	MK-PS-0500-F1
PS 232	Support	28.00'	27.42'	20.25'	MK-PS-0500-F1
PS 234	Support	28.00'	27.42'	20.25'	MK-PS-0500-F1
PS 236	Support	28.00'	27.42'	20.25'	MK-PS-0500-F1
PS 238	Anchor	28.00'	27.42'	16.58'	MK-PS-0500-F2
PS 240	Vault Anchor	SEE DWG 0500-FD-010			MK-VA-0500-03

PIPE ROUTE – SECTION 2
1"=20'

PRELIMINARY
NOT FOR CONSTRUCTION

NO.	DATE	REVISION	BY	CK'D	APP
–	–	–	–	–	–
HH	11-14-14		NLB	–	–

R&M ENGINEERING CONSULTANTS
SALT LAKE CITY, UTAH
(801)263-3419
13014

TESORO SAVAGE

THIS DRAWING CONTAINS PROPRIETARY AND PRIVILEGED INFORMATION OF TESORO SAVAGE PETROLEUM LLC AND SHALL NOT BE DISCLOSED OR USED FOR THE BENEFIT OF OTHERS WITHOUT PRIOR WRITTEN PERMISSION OF THE DRAWING OWNER.

CUSTOMER: TESORO SAVAGE PETROLEUM TERMINAL LLC

PROJECT: TESORO SAVAGE VANCOUVER ENERGY DISTRIBUTION TERMINAL LLC
PORT OF VANCOUVER, WASHINGTON

DESCRIPTION: AREA 0500 – FOOTING & FOUNDATION PLOT PLAN
PIPE ROUTE – SECTION 2

DESIGN:		START DATE: 06-07-13		SCALE:	AS SHOWN
DRAWN:	JBH	PRINT DATE:		PROJECT MANAGER:	DC
CHECKED:		APPROVED:		SIZE:	24x36
DRAWING NUMBER				SHEET	REV.
0500-FD-002				1/1	HH

13014 FOUNDATION PLOT PLAN Area 0500 11-14-14

EX-0001-007613-PCE

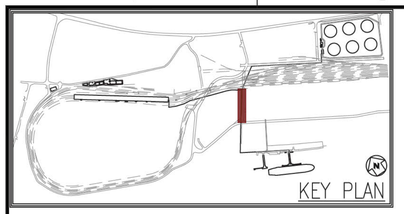

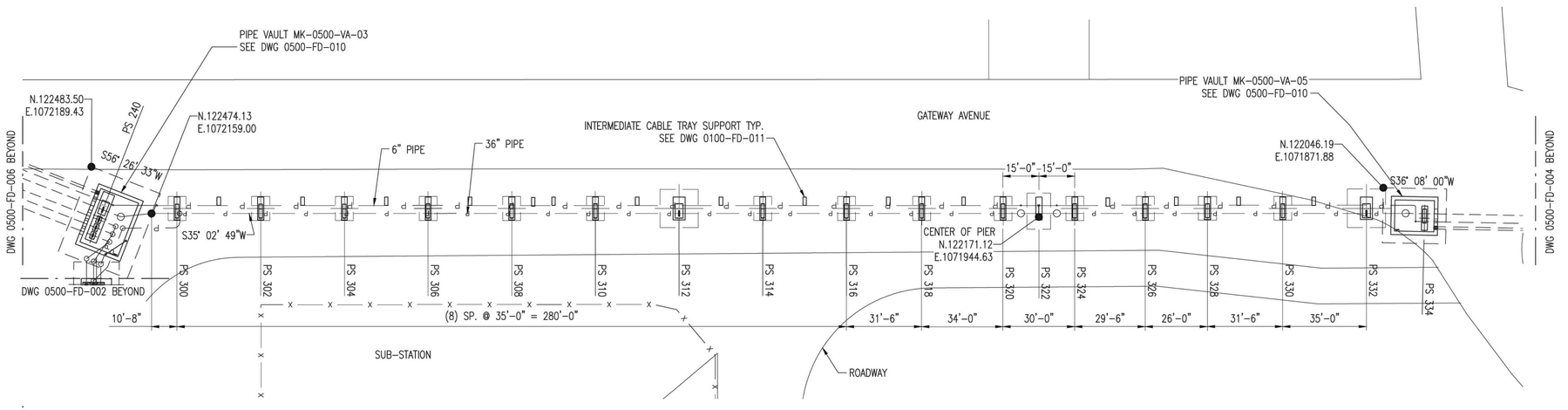

PIPE ROUTE – SECTION 3
1"=25'

PIPE SUPPORT TABLE

FOR DETAILS SEE DWG 0500-FD-020 U.N.O.

Pipe Support #	Type	B/Pipe	T/Conc. Pier	B/Conc. Ftg.	Ftg Mark #
PS 240	Vault Anchor	SEE DWG 0500-FD-010			MK-VA-0500-03
PS 300	Support	29.00'	28.42'	21.25'	MK-PS-0500-F4
PS 302	Support	29.00'	28.42'	21.25'	MK-PS-0500-F4
PS 304	Support	29.00'	28.42'	21.25'	MK-PS-0500-F4
PS 306	Support	29.00'	28.42'	21.25'	MK-PS-0500-F4
PS 308	Support	29.00'	28.42'	21.25'	MK-PS-0500-F4
PS 310	Support	33.00'	32.42'	25.25'	MK-PS-0500-F4
PS 312	Anchor	33.00'	32.42'	21.58'	MK-PS-0500-F5
PS 314	Support	33.00'	32.42'	25.25'	MK-PS-0500-F4
PS 316	Support	33.00'	32.42'	25.25'	MK-PS-0500-F4
PS 318	Support	33.00'	32.42'	25.25'	MK-PS-0500-F4
PS 320	Support	33.00'	32.42'	25.25'	MK-PS-0500-F4
PS 322	Elevated	49.00'	32.00'	25.67'	MK-PS-0500-F25
PS 324	Support	33.00'	32.42'	25.25'	MK-PS-0500-F4
PS 326	Support	33.00'	32.42'	25.25'	MK-PS-0500-F4
PS 328	Support	33.00'	32.42'	25.25'	MK-PS-0500-F4
PS 330	Support	33.00'	32.42'	25.25'	MK-PS-0500-F4
PS 332	Anchor	33.00'	32.42'	21.58'	MK-PS-0500-F5
PS 334	Vault	SEE DWG 0500-FD-010			MK-VA-0500-05

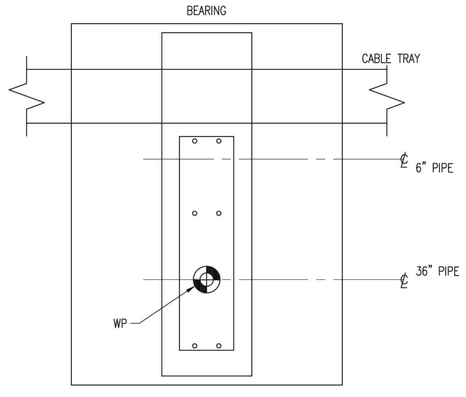

PIPE SUPPORT LEGEND
N.T.S.
THIS ORIENTATION IS ONLY FOR PS 300 TO PS 332

PRELIMINARY
NOT FOR CONSTRUCTION

NO.	DATE	REVISION	BY	CK'D	APP
–	–	–	–	–	–
HH	11-14-14		NLB	–	–

R&M ENGINEERING CONSULTANTS
SALT LAKE CITY, UTAH
(801)263-3419

13014

TESORO SAVAGE

THIS DRAWING CONTAINS PROPRIETARY AND PRIVILEGED INFORMATION OF TESORO SAVAGE PETROLEUM LLC AND SHALL NOT BE DISCLOSED OR USED FOR THE BENEFIT OF OTHERS WITHOUT PRIOR WRITTEN PERMISSION OF THE DRAWING OWNER.

CUSTOMER: TESORO SAVAGE PETROLEUM TERMINAL LLC

PROJECT: TESORO SAVAGE VANCOUVER ENERGY DISTRIBUTION TERMINAL LLC
PORT OF VANCOUVER, WASHINGTON

DESCRIPTION: AREA 0500 FOOTING & FOUNDATION PLOT PLAN
PIPE ROUTE – SECTION 3

DESIGN:		START DATE:	06-07-13	SCALE:	AS SHOWN
DRAWN:	JBH	PRINT DATE:		PROJECT MANAGER:	DC
CHECKED:		APPROVED:		SIZE:	24x36

DRAWING NUMBER	SHEET	REV.
0500-FD-003	1/1	HH

13014 FOUNDATION PLOT PLAN Area 0500 11-14-14

EX-0001-007614-PCE

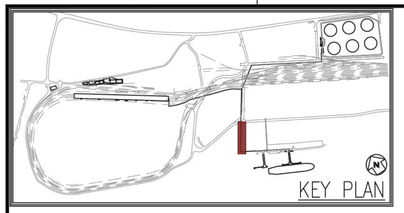

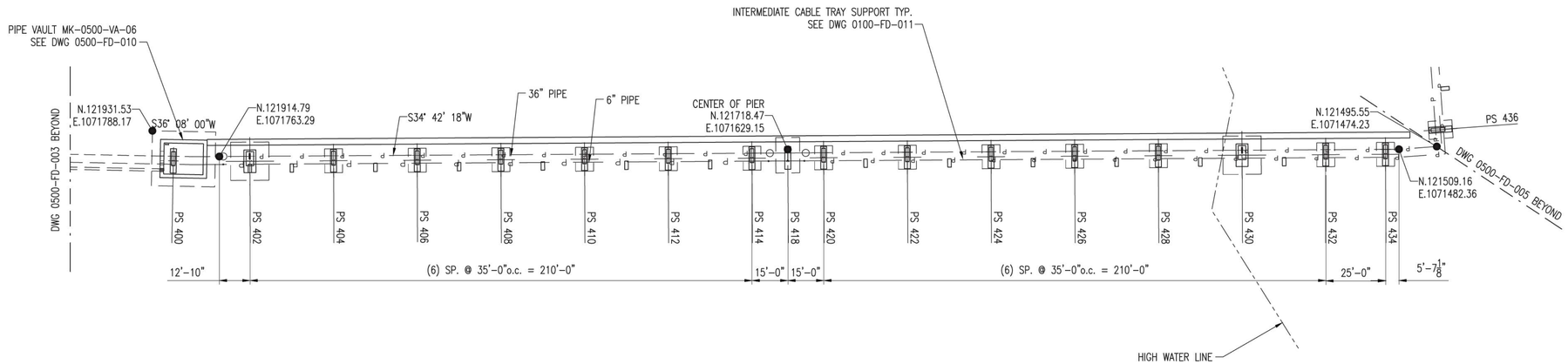

PIPE SUPPORT TABLE
FOR DETAILS SEE DWG 0500-FD-020 U.N.O.

Pipe Support #	Type	B/Pipe	T/Conc. Pier	B/Conc. Ftg.	Ftg Mark #
PS 400	Vault	SEE DWG 0500-FD-010			MK-VA-0500-06
PS 402	Anchor	35.00'	34.42'	23.58'	MK-PS-0500-F5
PS 404	Support	35.00'	34.42'	27.25'	MK-PS-0500-F4
PS 406	Support	35.00'	34.42'	27.25'	MK-PS-0500-F4
PS 408	Support	35.00'	34.42'	27.25'	MK-PS-0500-F4
PS 410	Support	35.00'	34.42'	27.25'	MK-PS-0500-F4
PS 412	Support	35.00'	34.42'	27.25'	MK-PS-0500-F4
PS 414	Support	35.00'	34.42'	27.25'	MK-PS-0500-F4
PS 418	Elevated	55.00'	34.00'	27.67'	MK-PS-0500-F25
PS 420	Support	35.00'	34.42'	27.25'	MK-PS-0500-F4
PS 422	Support	35.00'	34.42'	27.25'	MK-PS-0500-F4
PS 424	Support	35.00'	34.42'	27.25'	MK-PS-0500-F4
PS 426	Support	35.00'	34.42'	27.25'	MK-PS-0500-F4
PS 428	Support	35.00'	34.42'	27.25'	MK-PS-0500-F4
PS 430	Anchor	35.00'	34.42'	23.58'	MK-PS-0500-F5
PS 432	Support	35.00'	34.42'	27.25'	MK-PS-0500-F4
PS 434	Support	35.00'	34.42'	27.25'	MK-PS-0500-F4
PS 436	Reference Only				

PIPE ROUTE – SECTION 4
1"=25'

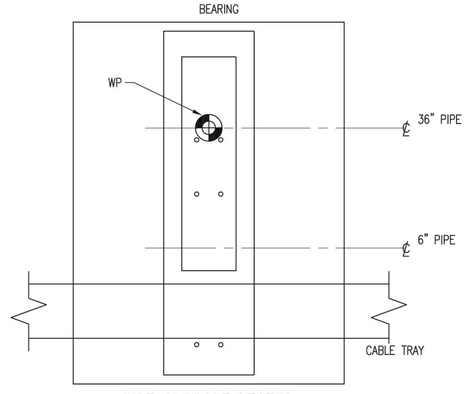

PIPE SUPPORT LEGEND
N.T.S.

THIS ORIENTATION IS ONLY FOR PS 402 TO BERTH 13

PRELIMINARY
NOT FOR CONSTRUCTION

NO.	DATE	REVISION	BY	CK'D	APP
–	–	–	–	–	–
HH	11-14-14		NLB	–	–

R&M ENGINEERING CONSULTANTS
SALT LAKE CITY, UTAH
(801)263-3419
14014

TESORO SAVAGE

THIS DRAWING CONTAINS PROPRIETARY AND PRIVILEGED INFORMATION OF TESORO SAVAGE PETROLEUM LLC AND SHALL NOT BE DISCLOSED OR USED FOR THE BENEFIT OF OTHERS WITHOUT PRIOR WRITTEN PERMISSION OF THE DRAWING OWNER.

CUSTOMER: TESORO SAVAGE PETROLEUM TERMINAL LLC

PROJECT: TESORO SAVAGE VANCOUVER ENERGY DISTRIBUTION TERMINAL LLC
PORT OF VANCOUVER, WASHINGTON

DESCRIPTION: AREA 0500 – FOOTING & FOUNDATION PLOT PLAN
PIPE ROUTE – SECTION 4

DESIGN:		START DATE: 06-07-13		SCALE:	AS SHOWN
DRAWN:	JBH	PRINT DATE:		PROJECT MANAGER:	DC
CHECKED:		APPROVED:		SIZE:	24x36
DRAWING NUMBER				SHEET	REV.
0500-FD-004				1/1	HH

13014 FOUNDATION PLOT PLAN Area 0500 11:14-14

EX-0001-007615-PCE

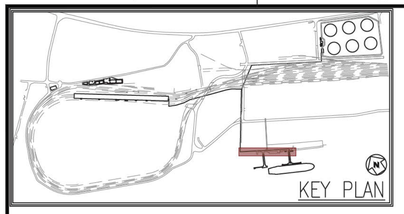

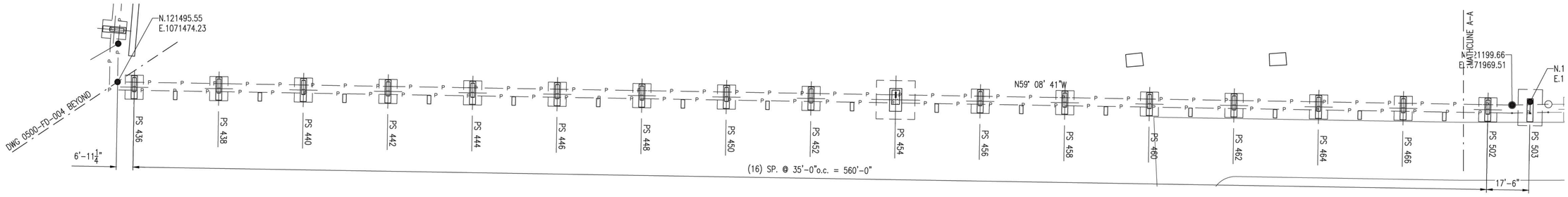

PIPE SUPPORT TABLE

FOR DETAILS SEE DWG 0500-FD-020 U.N.O.

Pipe Support #	Type	B/Pipe	T/Conc. Pier	B/Conc. Ftg.	Ftg Mark #
PS 436	Support	30.00'	29.42'	22.25'	MK-PS-0500-F4
PS 438	Support	30.00'	29.42'	22.25'	MK-PS-0500-F4
PS 440	Support	30.00'	29.42'	22.25'	MK-PS-0500-F4
PS 442	Support	30.00'	29.42'	22.25'	MK-PS-0500-F4
PS 444	Support	30.00'	29.42'	22.25'	MK-PS-0500-F4
PS 446	Support	30.00'	29.42'	22.25'	MK-PS-0500-F4
PS 448	Support	30.00'	29.42'	22.25'	MK-PS-0500-F4
PS 450	Support	30.00'	29.42'	22.25'	MK-PS-0500-F4
PS 452	Support	30.00'	29.42'	22.25'	MK-PS-0500-F4
PS 454	Support	30.00'	29.42'	22.25'	MK-PS-0500-F5
PS 456	Support	30.00'	29.42'	22.25'	MK-PS-0500-F4
PS 458	Support	30.00'	29.42'	22.25'	MK-PS-0500-F4
PS 460	Support	30.00'	29.42'	22.25'	MK-PS-0500-F4
PS 462	Support	30.00'	29.42'	22.25'	MK-PS-0500-F4
PS 464	Support	30.00'	29.42'	22.25'	MK-PS-0500-F4
PS 466	Support	30.00'	29.42'	22.25'	MK-PS-0500-F4
PS 502	Support	30.00'	29.42'	22.25'	MK-PS-0500-F4
PS 503	Elevated	50.00'	29.42'	23.08'	MK-PS-0500-F25
PS 504	Support	30.00'	29.42'	22.25'	MK-PS-0500-F4
PS 506	Support	30.00'	29.42'	22.25'	MK-PS-0500-F4
PS 508	Support	30.00'	29.42'	22.25'	MK-PS-0500-F4
PS 510	Support	30.00'	29.42'	22.25'	MK-PS-0500-F4
PS 512	Support	30.00'	29.42'	22.25'	MK-PS-0500-F4
PS 514	Support	30.00'	29.42'	22.25'	MK-PS-0500-F4
PS 516	Support	30.00'	29.42'	22.25'	MK-PS-0500-F4
PS 518	Support	30.00'	29.42'	22.25'	MK-PS-0500-F4
PS 520	Anchor	30.00'	29.42'	22.25'	MK-PS-0500-F4
PS 522	Support	30.00'	29.42'	22.25'	MK-PS-0500-F4
PS 523	Support	30.00'	29.42'	22.25'	MK-PS-0500-F4
PS 524	Support	30.00'	29.42'	22.25'	MK-PS-0500-F4
PS 525	Support	30.00'	29.42'	22.25'	MK-PS-0500-F4

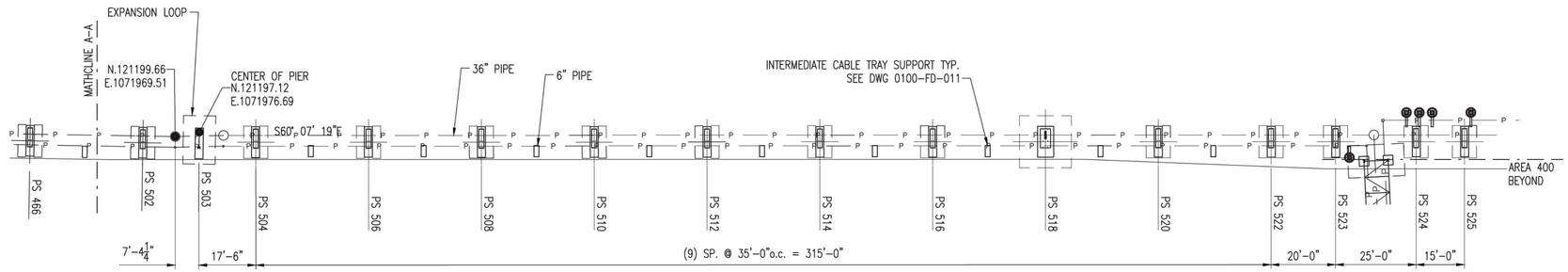

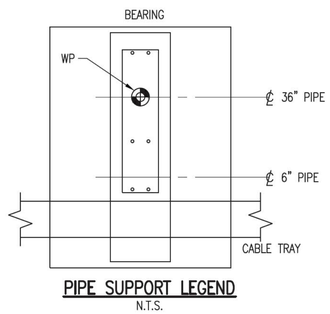

PIPE SUPPORT LEGEND
N.T.S.

PIPE ROUTE – SECTIONS 5 & 6
1"=20'

N

PRELIMINARY
NOT FOR CONSTRUCTION

NO.	DATE	REVISION	BY	CK'D	APP
–	–	–	–	–	–
HH	11-14-14		NLB	–	–

13014 FOUNDATION PLOT PLAN Area 0500 11-14-14

R&M ENGINEERING CONSULTANTS
SALT LAKE CITY, UTAH
(801)263-3419

13014

TESORO SAVAGE

THIS DRAWING CONTAINS PROPRIETARY AND PRIVILEGED INFORMATION OF TESORO SAVAGE PETROLEUM LLC AND SHALL NOT BE DISCLOSED OR USED FOR THE BENEFIT OF OTHERS WITHOUT PRIOR WRITTEN PERMISSION OF THE DRAWING OWNER.

CUSTOMER: TESORO SAVAGE PETROLEUM TERMINAL LLC

PROJECT: TESORO SAVAGE VANCOUVER ENERGY DISTRIBUTION TERMINAL LLC
PORT OF VANCOUVER, WASHINGTON

DESCRIPTION:
AREA 0500 – FOOTING AND FOUNDATION PLOT PLAN
PIPE ROUTE – SECTION 5 & 6

DESIGN:		START DATE: 06-07-13	SCALE: AS SHOWN
DRAWN: JBH		PRINT DATE:	PROJECT MANAGER: DC
CHECKED:		APPROVED:	SIZE: 24x36
DRAWING NUMBER			SHEET 1/1 REV. HH
0500-FD-005			

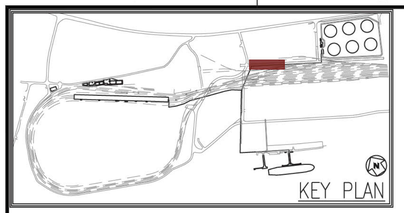

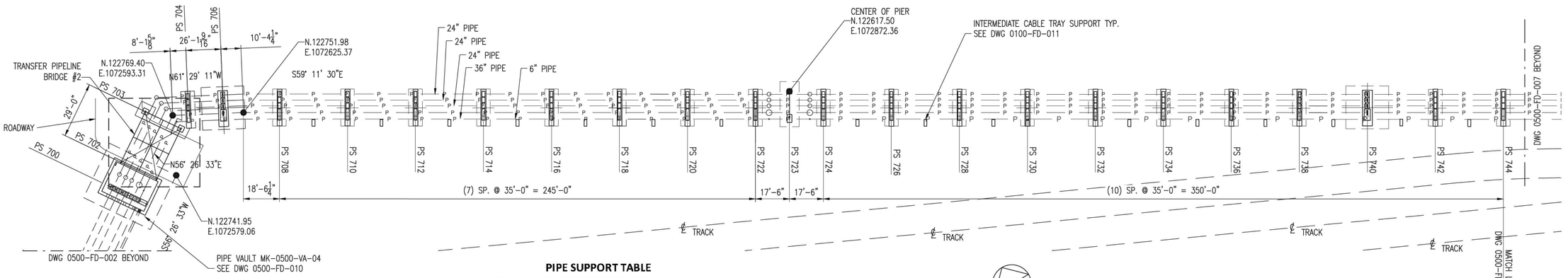

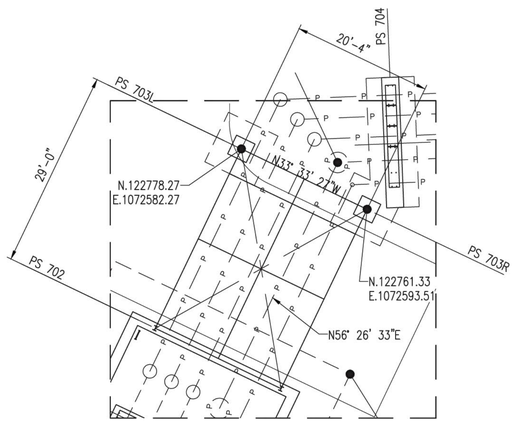

PIPE SUPPORT TABLE

FOR DETAILS SEE DWG 0500-FD-020 U.N.O.

Pipe Support #	Type	B/Pipe	T/Conc. Pier	B/Conc. Ftg.	Ftg Mark #
PS 700	Vault	SEE DWG 0500-FD-010			MK-VA-0500-04
PS 702					
PS 703L	Elevated	45.00'	29.00'	23.00'	MK-PS-0500-F30
PS 703R	Elevated	45.00'	29.00'	22.25'	MK-PS-0500-F34
PS 704	Support	30.00'	29.42'		
PS 706	Anchor	30.00'	29.42'	18.58'	MK-PS-0500-F8
PS 708	Support	30.00'	29.42'	22.25'	MK-PS-0500-F7
PS 710	Support	30.00'	29.42'	22.25'	MK-PS-0500-F7
PS 712	Support	30.00'	29.42'	22.25'	MK-PS-0500-F7
PS 714	Support	30.00'	29.42'	22.25'	MK-PS-0500-F7
PS 716	Support	30.00'	29.42'	22.25'	MK-PS-0500-F7
PS 718	Support	30.00'	29.42'	22.25'	MK-PS-0500-F7
PS 720	Support	30.00'	29.42'	22.25'	MK-PS-0500-F7
PS 722	Support	30.00'	29.42'	22.25'	MK-PS-0500-F7
PS 723	Elevated	50.00'	29.00'	22.67'	MK-PS-0500-F32
PS 724	Support	30.00'	29.42'	22.25'	MK-PS-0500-F7
PS 726	Support	30.00'	29.42'	22.25'	MK-PS-0500-F7
PS 728	Support	30.00'	29.42'	22.25'	MK-PS-0500-F7
PS 730	Support	30.00'	29.42'	22.25'	MK-PS-0500-F7
PS 732	Support	30.00'	29.42'	22.25'	MK-PS-0500-F7
PS 734	Support	30.00'	29.42'	22.25'	MK-PS-0500-F7
PS 736	Support	30.00'	29.42'	22.25'	MK-PS-0500-F7
PS 738	Support	30.00'	29.42'	22.25'	MK-PS-0500-F7
PS 740	Anchor	30.00'	29.42'	18.58'	MK-PS-0500-F8
PS 742	Support	30.00'	29.42'	22.25'	MK-PS-0500-F7
PS 744	Support	30.00'	29.42'	22.25'	MK-PS-0500-F7

PIPE ROUTE – SECTION 7
1"=25'

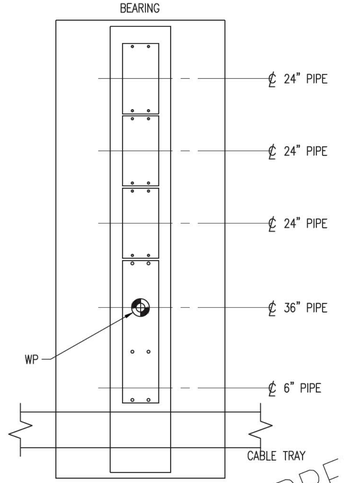

PIPE SUPPORT LEGEND
N.T.S.

PRELIMINARY
NOT FOR CONSTRUCTION

NO.	DATE	REVISION	BY	CK'D	APP
–	–	–	–	–	–
HH	11-14-14		NLB	–	–

13014 FOUNDATION PLOT PLAN Area 0500 11-14-14

R&M ENGINEERING CONSULTANTS
SALT LAKE CITY, UTAH
(801)263-3419

13014

TESORO SAVAGE

THIS DRAWING CONTAINS PROPRIETARY AND PRIVILEGED INFORMATION OF TESORO SAVAGE PETROLEUM LLC AND SHALL NOT BE DISCLOSED OR USED FOR THE BENEFIT OF OTHERS WITHOUT PRIOR WRITTEN PERMISSION OF THE DRAWING OWNER.

CUSTOMER: TESORO SAVAGE PETROLEUM TERMINAL LLC

PROJECT: TESORO SAVAGE VANCOUVER ENERGY DISTRIBUTION TERMINAL LLC
PORT OF VANCOUVER, WASHINGTON

DESCRIPTION: AREA 0500 – FOOTING & FOUNDATION PLOT PLAN
PIPE ROUTE – SECTION 7

DESIGN:	START DATE: 06-07-13	SCALE:	AS SHOWN
DRAWN: JBH	PRINT DATE:	PROJECT MANAGER:	DC
CHECKED:	APPROVED:	SIZE:	24x36
DRAWING NUMBER		SHEET	REV.
0500-FD-006		1/1	HH

EX-0001-007617-PCE

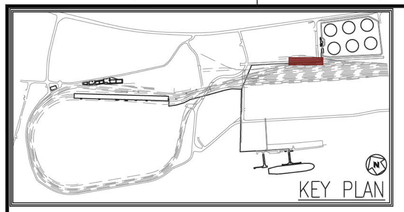

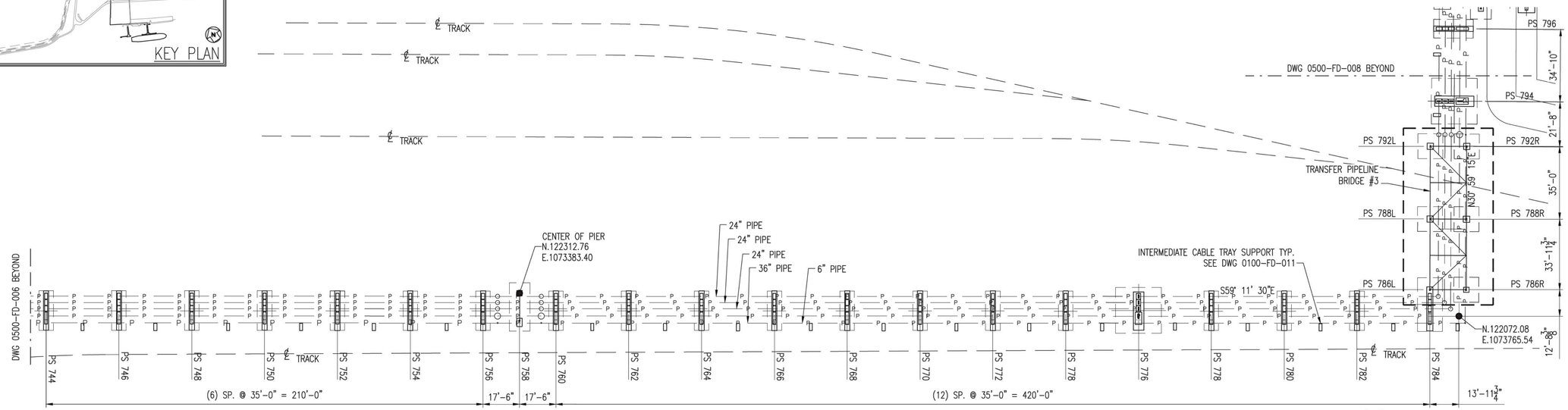

MATCH LINE A-A
DWG 0500-FD-006

PIPE SUPPORT TABLE
FOR DETAILS SEE DWG 0500-FD-020 U.N.O.

Pipe Support #	Type	B/Pipe	T/Conc. Pier	B/Conc. Ftg.	Ftg Mark #
PS 746	Support	30.00'	29.42'	22.25'	MK-PS-0500-F7
PS 748	Support	30.00'	29.42'	22.25'	MK-PS-0500-F7
PS 750	Support	30.00'	29.42'	22.25'	MK-PS-0500-F7
PS 752	Support	30.00'	29.42'	22.25'	MK-PS-0500-F7
PS 754	Support	30.00'	29.42'	22.25'	MK-PS-0500-F7
PS 756	Support	30.00'	29.42'	22.25'	MK-PS-0500-F7
PS 758	Elevated	50.00'	29.00'	22.67'	MK-PS-0500-F32
PS 760	Support	30.00'	29.42'	22.25'	MK-PS-0500-F7
PS 762	Support	30.00'	29.42'	22.25'	MK-PS-0500-F7
PS 764	Support	30.00'	29.42'	22.25'	MK-PS-0500-F7
PS 766	Support	30.00'	29.42'	22.25'	MK-PS-0500-F7
PS 768	Support	30.00'	29.42'	22.25'	MK-PS-0500-F7
PS 770	Support	30.00'	29.42'	22.25'	MK-PS-0500-F7
PS 772	Support	30.00'	29.42'	22.25'	MK-PS-0500-F7
PS 774	Support	30.00'	29.42'	22.25'	MK-PS-0500-F7
PS 776	Anchor	30.00'	29.42'	18.58'	MK-PS-0500-F8
PS 778	Support	30.00'	29.42'	22.25'	MK-PS-0500-F7
PS 780	Support	30.00'	29.42'	22.25'	MK-PS-0500-F7
PS 782	Support	30.00'	29.42'	22.25'	MK-PS-0500-F7
PS 784	Support	30.00'	29.42'	22.25'	MK-PS-0500-F10
PS 786L	Elevated	54.00'			
PS 786R	Elevated	54.00'	29.42'	21.92'	MK-PS-0500-F31
PS 788L	Elevated	54.00'	29.42'	21.92'	MK-PS-0500-F31
PS 788R	Elevated	54.00'	29.42'	21.92'	MK-PS-0500-F31
PS 792L	Elevated	54.00'	29.42'	21.92'	MK-PS-0500-F31
PS 792R	Elevated	54.00'	29.42'	21.92'	MK-PS-0500-F31
PS 794	Anchor	31.21'	30.63'	19.79'	MK-PS-0500-F11
PS 796	Reference Only				

PIPE ROUTE – SECTION 8
1"=25'

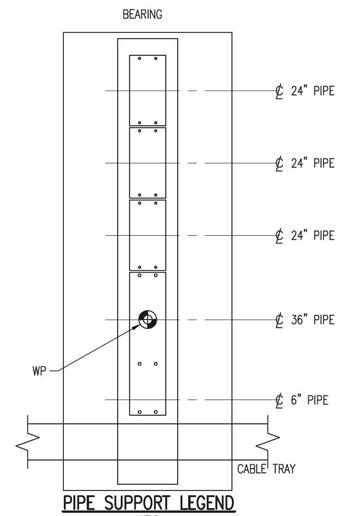

PIPE SUPPORT LEGEND
N.T.S.

PRELIMINARY
NOT FOR CONSTRUCTION

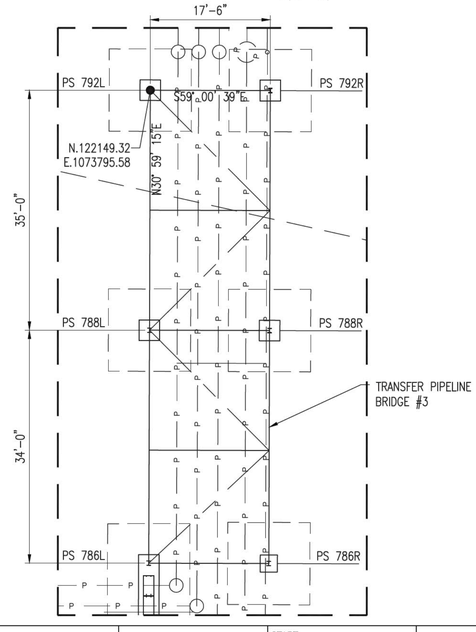

NO.	DATE	REVISION	BY	CK'D	APP
–	–	–	–	–	–
HH	11–14–14		NLB	–	–

R&M ENGINEERING CONSULTANTS
SALT LAKE CITY, UTAH
(801)263-3419

13014

TESORO SAVAGE

THIS DRAWING CONTAINS PROPRIETARY AND PRIVILEGED INFORMATION OF TESORO SAVAGE PETROLEUM LLC AND SHALL NOT BE DISCLOSED OR USED FOR THE BENEFIT OF OTHERS WITHOUT PRIOR WRITTEN PERMISSION OF THE DRAWING OWNER.

CUSTOMER: TESORO SAVAGE PETROLEUM TERMINAL LLC

PROJECT: TESORO SAVAGE VANCOUVER ENERGY DISTRIBUTION TERMINAL LLC
PORT OF VANCOUVER, WASHINGTON

DESCRIPTION:
AREA 0500 – FOOTING & FOUNDATION PLOT PLAN
PIPE ROUTE – SECTION 8

DESIGN:	START DATE: 06–07–13	SCALE:	AS SHOWN
DRAWN: JBH	PRINT DATE:	PROJECT MANAGER:	DC
CHECKED:	APPROVED:	SIZE:	24x36
DRAWING NUMBER		SHEET	REV.
0500–FD–007		1/1	HH

13014 FOUNDATION PLOT PLAN Area 0500 11:14:14

EX-0001-007618-PCE

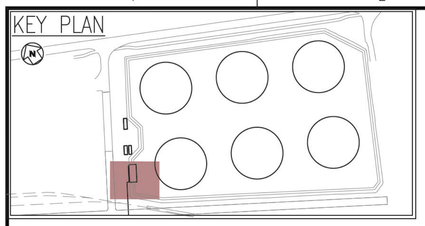

PRELIMINARY

NOT FOR CONSTRUCTION

PIPE SUPPORT TABLE
FOR DETAILS SEE DWG 0500-FD-020 U.N.O.

Pipe Support #	Type	B/Pipe	T/Conc. Pier	B/Conc. Ftg.	Ftg Mark #
PS 794	Reference Only				
PS 796	Support	31.21'	30.63'	23.46'	MK-PS-0500-F12
PS 798	Support	31.21'	30.63'	24.46'	MK-PS-0500-F3
PS 800	Elevated	37.21'	29.00'	22.50'	MK-PS-0500-F33
PS 802	Support	37.21'	36.63'	33.63'	MK-PS-0500-F20
PS 804	Support	29.38'	28.79'	25.79'	MK-PS-0500-F20
PS 806	Support	29.38'	28.79'	25.79'	MK-PS-0500-F20
PS 808	Support	29.38'	28.79'	25.79'	MK-PS-0500-F20
PS 1011	Support	31.19'	30.60'	27.63'	MK-PS-0500-F6
PS 1012	Support	31.19'	30.60'	27.63'	MK-PS-0500-F6
PS 1013	Support	31.19'	30.60'	27.63'	MK-PS-0500-F6
PS 1014	Anchor	31.19'	30.60'	27.63'	MK-PS-0500-F9
PS 1016	Support	31.19'	30.60'	27.63'	MK-PS-0500-F6

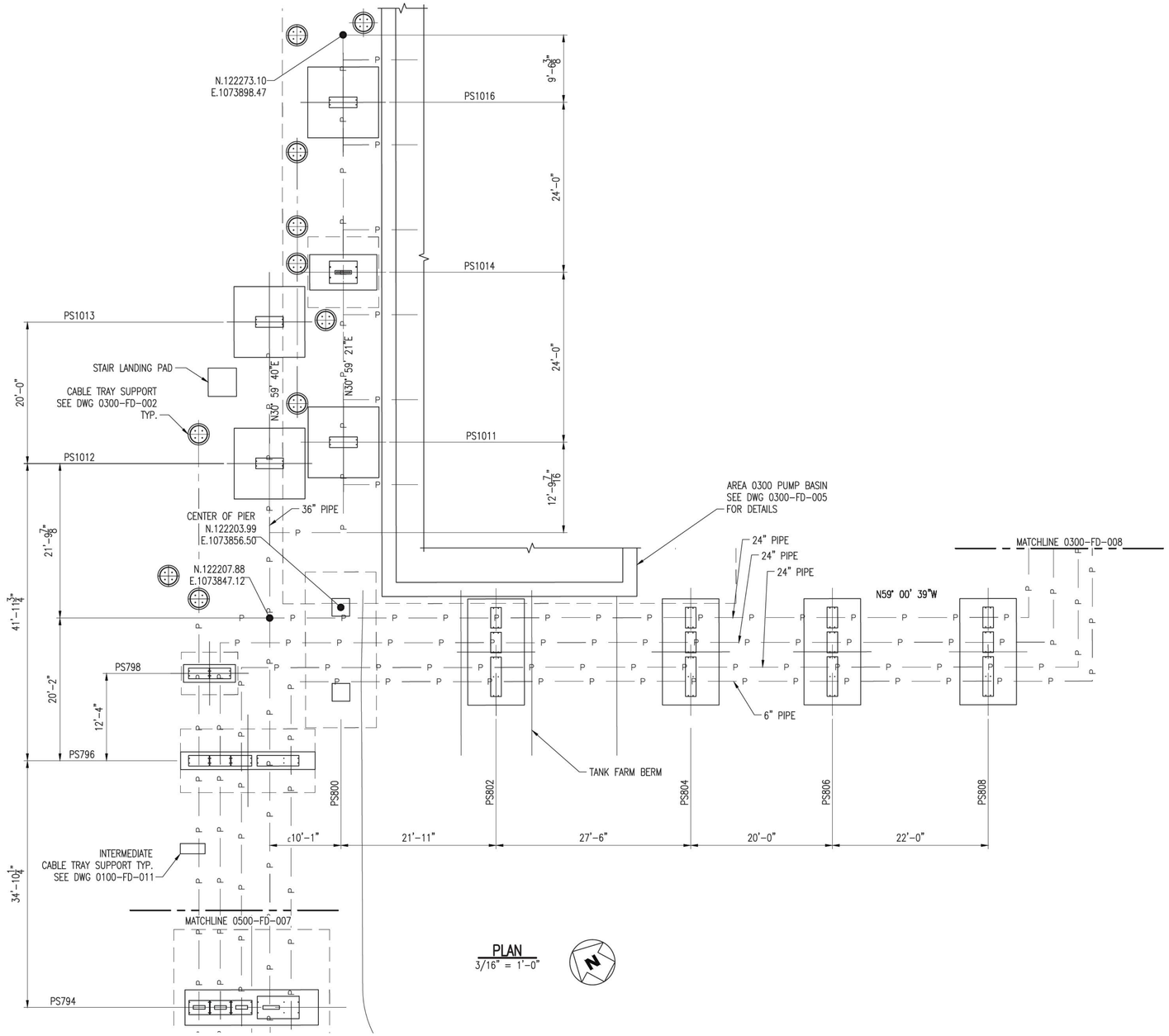

PLAN
3/16" = 1'-0"

NO.	DATE	REVISION	BY	CK'D	APP
–	–	–	–	–	–
HH	11-14-14		NLB	–	–

R&M ENGINEERING CONSULTANTS
SALT LAKE CITY, UTAH
(801)263-3419

13014

TESORO SAVAGE

THIS DRAWING CONTAINS PROPRIETARY AND PRIVILEGED INFORMATION OF TESORO SAVAGE PETROLEUM LLC AND SHALL NOT BE DISCLOSED OR USED FOR THE BENEFIT OF OTHERS WITHOUT PRIOR WRITTEN PERMISSION OF THE DRAWING OWNER.

CUSTOMER: TESORO SAVAGE PETROLEUM TERMINAL LLC

PROJECT: TESORO SAVAGE VANCOUVER ENERGY DISTRIBUTION TERMINAL LLC
PORT OF VANCOUVER, WASHINGTON

DESCRIPTION:
AREA 0500 – FOOTING & FOUNDATION PLOT PLAN
PIPE ROUTE – SECTION 9

DESIGN:		START DATE: 07-31-13	SCALE: AS NOTED
DRAWN: NMJ		PRINT DATE:	PROJECT MANAGER: DC
CHECKED:		APPROVED:	SIZE: 24x36
DRAWING NUMBER			SHEET 1/1 REV. HH
0500-FD-008			

13014 FOUNDATION PLOT PLAN Area 0500 11:14-14

EX-0001-007619-PCE

PIPE VAULT SCHEDULE

VAULT. Mk.	Vault #	Cross-Seciton Type	REF. DWG	Pipe Support Plan DWG	Pipe Support Elevation DWG	Dimensions and Elevations					Made By	Chk'D By
						T/Wall S	Wall Ht. P	T/Pier T	T/Floor V	B/Ftg W		
MK-VA-0500-01	1	A	0500-FD-001	0500-FD-011	0500-FD-016	31.75'	9'-0"	24.25'	22.75'	21.25'	NMJ	
MK-VA-0500-02	2	A	0500-FD-002	0500-FD-011	0500-FD-014	30.00'	7'-3"	24.25'	22.75'	21.25'	NMJ	
MK-VA-0500-03	3	B	0500-FD-003	0500-FD-012	0500-FD-016	27.05'	12'-0"	16.55'	15.05'	13.55'	NMJ	
MK-VA-0500-04	4	B	0500-FD-006	0500-FD-012	0500-FD-014	27.55'	12'-6"	16.55'	15.05'	13.55'	NMJ	
MK-VA-0500-05	5	C	0500-FD-003	0500-FD-013	0500-FD-014	31.60'	13'-3"	19.92'	18.42'	16.92'	NMJ	
MK-VA-0500-06	6	C	0500-FD-004	0500-FD-013	0500-FD-014	32.41'	14'-0"	19.92'	18.42'	16.92'	NMJ	

NOTES:

1. FOR CONCRETE GENERAL NOTES SEE DWG 0100-FD-001.
2. BASE PLATE:
   A. SEE DWG 0100-FD-002 FOR DETAILS.
   B. TOLERANCE ON ELEVATION OF TOPS OF EMBEDDED PLATES ARE $\pm\frac{1}{8}$"
   C. BASE PLATES TO BE PROVIDED BY CONCRETE CONTRACTOR
3. ANCHOR ROD, SEE DWG 0100-FD-001 FOR SCHEDULE.
4. ALL REBAR DIMENSIONS ARE TO OUTSIDE OF REBAR U.N.O.
5. SEE FOOTING AND FOUNDATION PLOT PLAN FOR T/CONC. ELEVATIONS.

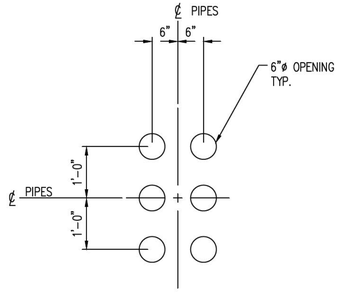

DETAIL 1 — 6"ø OPENING ARRANGEMENT

PRELIMINARY
NOT FOR CONSTRUCTION

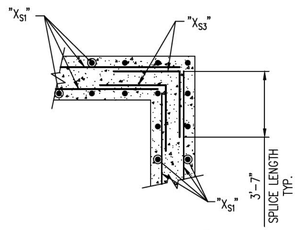

DETAIL 2 — TYP. CORNER TIES, ALL VAULTS

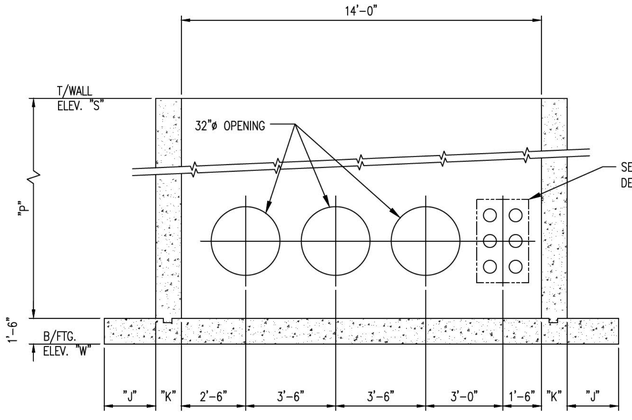

SECTION A — 3/8" = 1'-0" TYPE "1" — 0500-FD-011

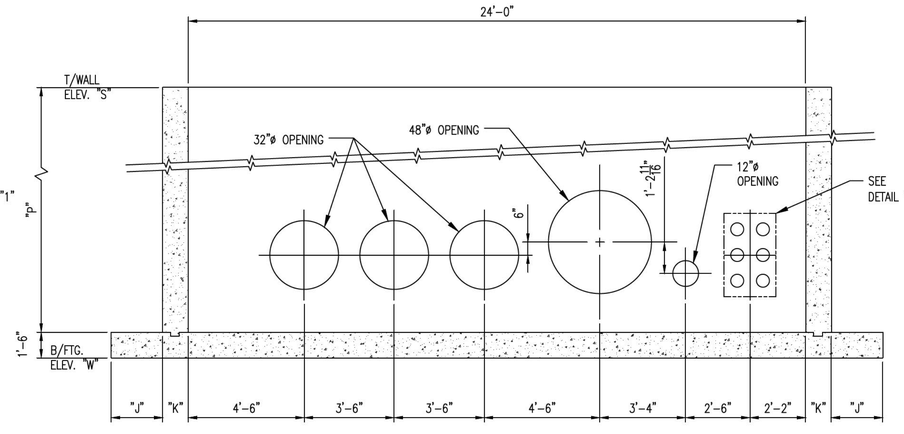

SECTION B — 3/8" = 1'-0" TYPE "2" — 0500-FD-012

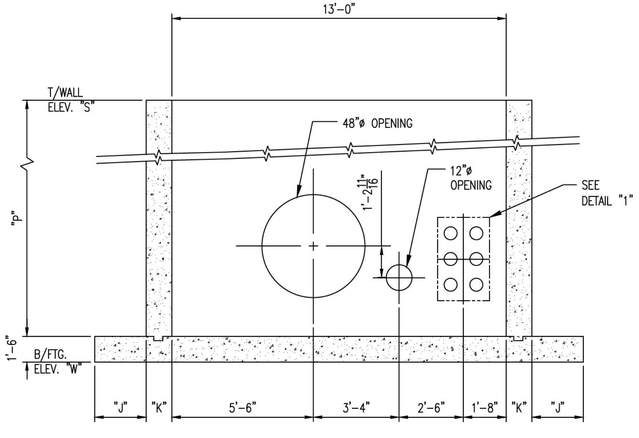

SECTION C — 3/8" = 1'-0" TYPE "3" — 0500-FD-013

Footing Schedule Area 0500 Vault

NO.	DATE	REVISION	BY	CK'D	APP
–	–	–	–	–	–
HH	11/14/14		NLB	–	–

R&M ENGINEERING CONSULTANTS
SALT LAKE CITY, UTAH
(801)263-3419
13014

TESORO SAVAGE

THIS DRAWING CONTAINS PROPRIETARY AND PRIVILEGED INFORMATION OF TESORO SAVAGE PETROLEUM LLC AND SHALL NOT BE DISCLOSED OR USED FOR THE BENEFIT OF OTHERS WITHOUT PRIOR WRITTEN PERMISSION OF THE DRAWING OWNER.

CUSTOMER: TESORO SAVAGE PETROLEUM TERMINAL LLC

PROJECT: TESORO SAVAGE VANCOUVER ENERGY DISTRIBUTION TERMINAL LLC
PORT OF VANCOUVER, WASHINGTON

DESCRIPTION:
AREA 0500 PIPE VAULT SCHEDULE
PLAN, ELEVATIONS, & DETAILS

DESIGN:	NMJ	START DATE:	08-06-13	SCALE:	AS NOTED
DRAWN:	NMJ/PDM	PRINT DATE:	11/14/14	PROJECT MANAGER:	DC
CHECKED:		APPROVED:		SIZE:	24x36

DRAWING NUMBER: 0500-FD-010
SHEET: 1/1
REV.: HH

EX-0001-007620-PCE

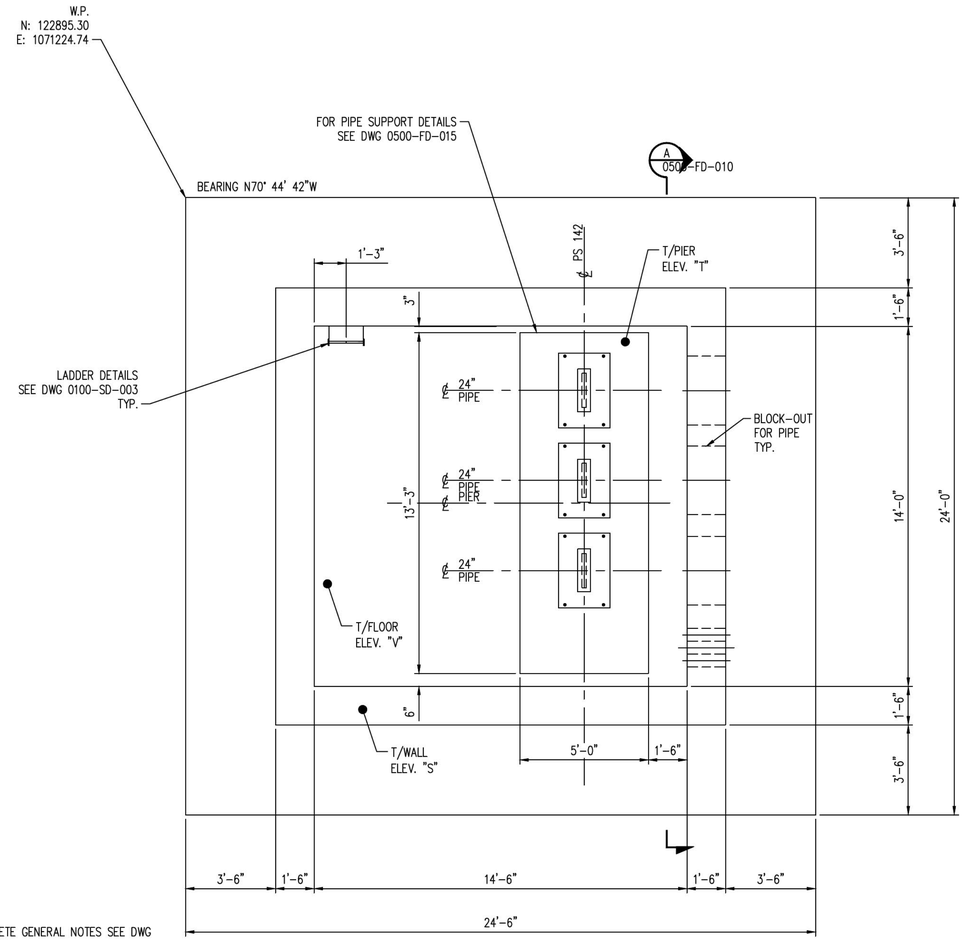

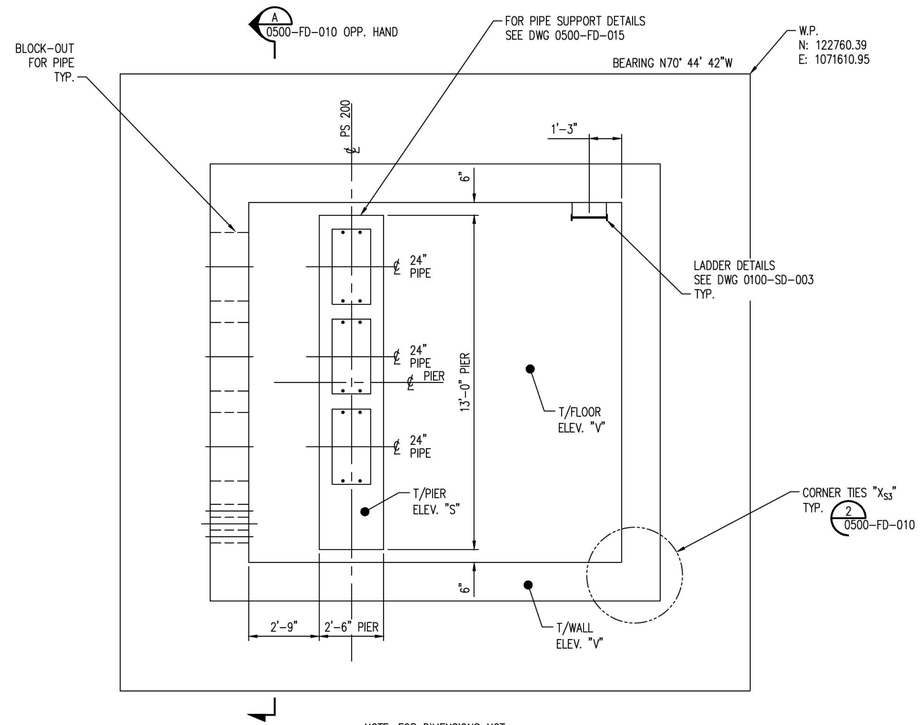

NOTE: FOR DIMENSIONS NOT
SHOWN SEE MK-VA-0500-01

NOTES:

1. FOR CONCRETE GENERAL NOTES SEE DWG 0100-FD-001.
2. BASE PLATE:
   A. SEE DWG 0100-FD-002 FOR DETAILS.
   B. TOLERANCE ON ELEVATION OF TOPS OF EMBEDDED PLATES ARE ±1/8"
   C. BASE PLATES TO BE PROVIDED BY CONCRETE CONTRACTOR
3. ANCHOR ROD, SEE DWG 0100-FD-001 FOR SCHEDULE.
4. ALL REBAR DIMENSIONS ARE TO OUTSIDE OF REBAR U.N.O.
5. SEE FOOTING AND FOUNDATION PLOT PLAN FOR T/CONC. ELEVATIONS.

MK-VA-0500-01
3/16" = 1'-0"
FOR LOACTION SEE DWG 0500-FD-001

MK-VA-0500-02
3/16" = 1'-0"
FOR LOACTION SEE DWG 0500-FD-002

Footing Schedule Area 0500 Vault

NO.	DATE	REVISION	BY	CK'D	APP
–	–	–	–	–	–
HH	11/14/14		NLB	–	–

R&M ENGINEERING CONSULTANTS
SALT LAKE CITY, UTAH
(801)263-3419
13014

TESORO SAVAGE

THIS DRAWING CONTAINS PROPRIETARY AND PRIVILEGED INFORMATION OF TESORO SAVAGE PETROLEUM LLC AND SHALL NOT BE DISCLOSED OR USED FOR THE BENEFIT OF OTHERS WITHOUT PRIOR WRITTEN PERMISSION OF THE DRAWING OWNER.

CUSTOMER: TESORO SAVAGE PETROLEUM TERMINAL LLC

PROJECT: TESORO SAVAGE VANCOUVER ENERGY DISTRIBUTION TERMINAL LLC
PORT OF VANCOUVER, WASHINGTON

DESCRIPTION:
AREA 0500 PIPE VAULT PLAN VIEW
MK-VA-0500-01 & MK-VA-0500-02

DESIGN:	NMJ	START DATE:	08-06-13	SCALE:	AS NOTED
DRAWN:	NMJ/PDM	PRINT DATE:	11/14/14	PROJECT MANAGER:	DC
CHECKED:		APPROVED:		SIZE:	24x36

DRAWING NUMBER	SHEET	REV.
0500-FD-011	1/1	HH

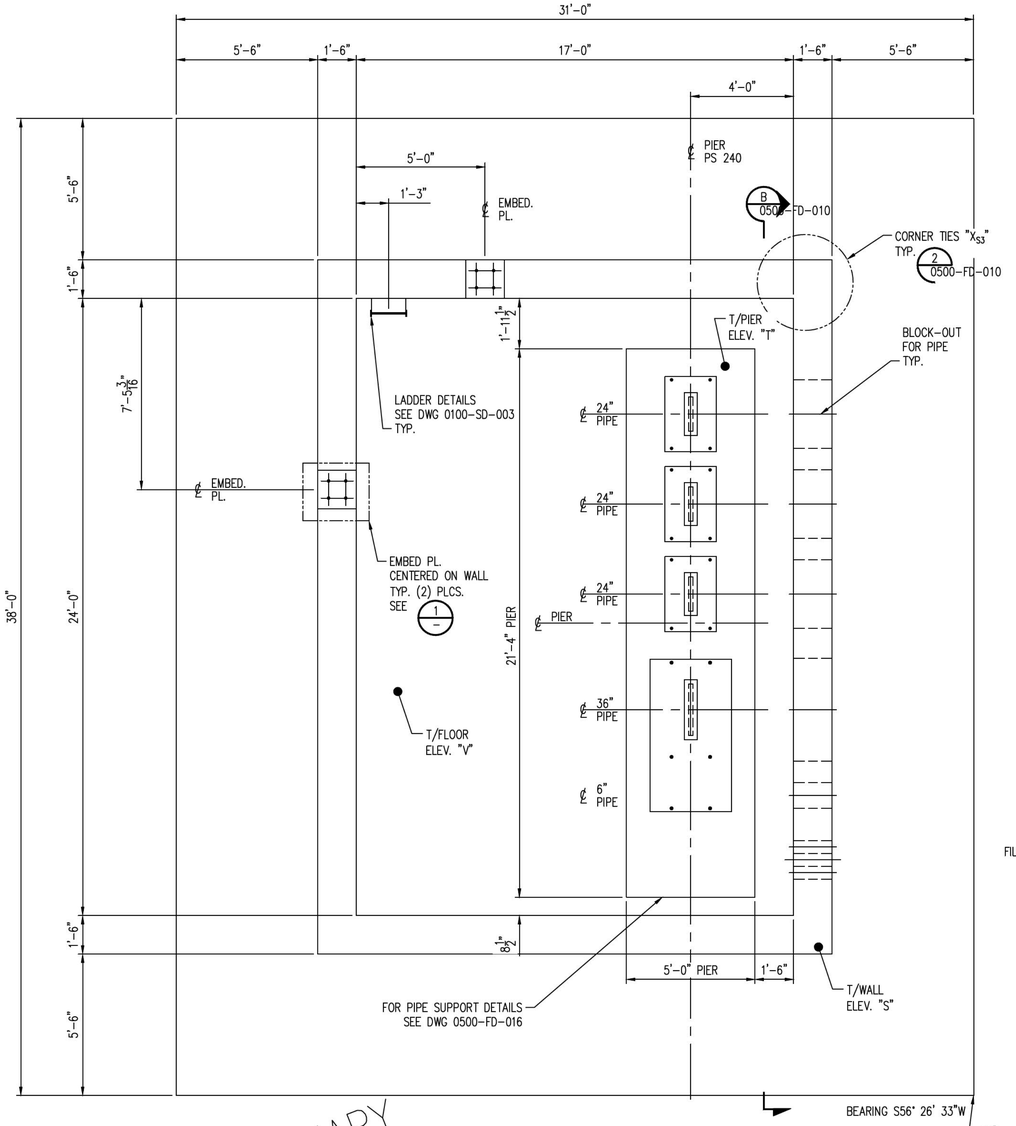

NOTES:

1. FOR CONCRETE GENERAL NOTES SEE DWG 0100-FD-001.
2. BASE PLATE:
   A. SEE DWG 0100-FD-002 FOR DETAILS.
   B. TOLERANCE ON ELEVATION OF TOPS OF EMBEDDED PLATES ARE ±⅛"
   C. BASE PLATES TO BE PROVIDED BY CONCRETE CONTRACTOR
3. ANCHOR ROD, SEE DWG 0100-FD-001 FOR SCHEDULE.
4. ALL REBAR DIMENSIONS ARE TO OUTSIDE OF REBAR U.N.O.
5. SEE FOOTING AND FOUNDATION PLOT PLAN FOR T/CONC. ELEVATIONS.

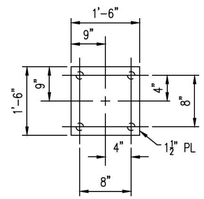

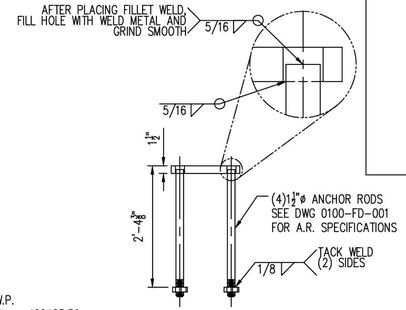

EMBED PLATE DETAIL 1 — NTS

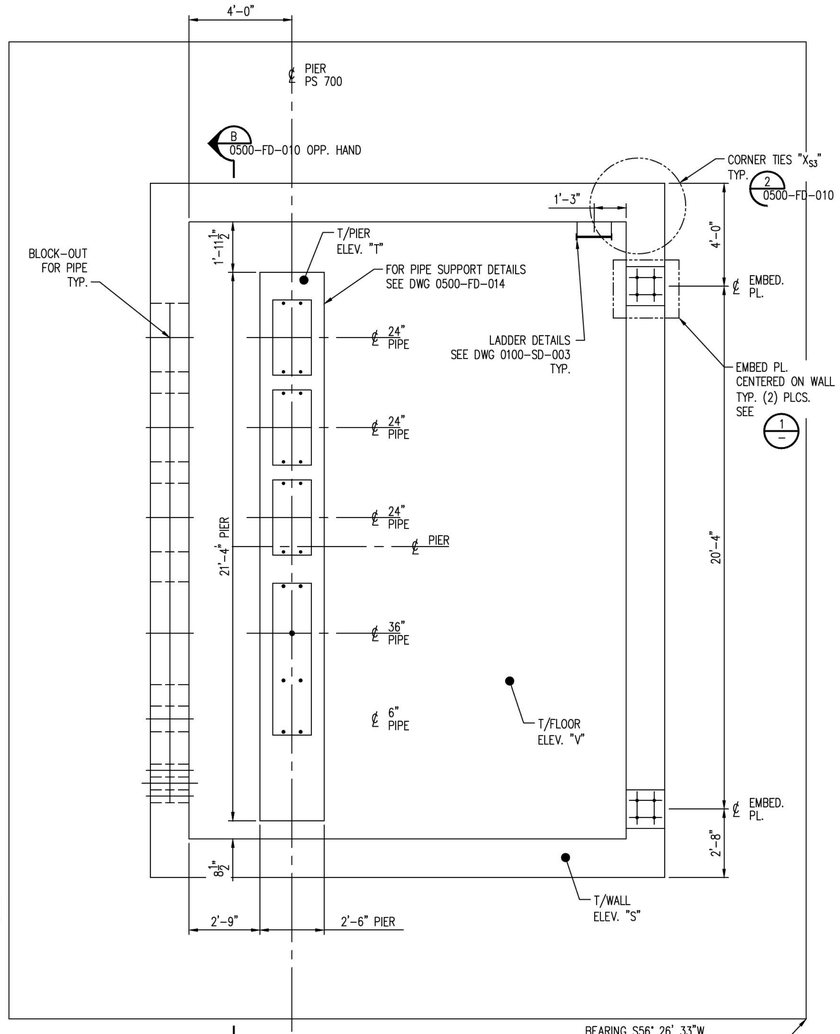

NOTE: FOR DIMENSIONS NOT SHOWN SEE MK-VA-0500-03

MK-VA-0500-04
3/16" = 1'-0"
FOR LOACTION SEE DWG 0500-FD-006

PRELIMINARY
NOT FOR CONSTRUCTION

MK-VA-0500-03
3/16" = 1'-0"
FOR LOACTION SEE DWG 0500-FD-002

Footing Schedule Area 0500 Vault

NO.	DATE	REVISION	BY	CK'D	APP
–	–	–	–	–	–
HH	11/14/14		NLB	–	–

R&M ENGINEERING CONSULTANTS
SALT LAKE CITY, UTAH
(801)263-3419
13014

TESORO SAVAGE

THIS DRAWING CONTAINS PROPRIETARY AND PRIVILEGED INFORMATION OF TESORO SAVAGE PETROLEUM LLC AND SHALL NOT BE DISCLOSED OR USED FOR THE BENEFIT OF OTHERS WITHOUT PRIOR WRITTEN PERMISSION OF THE DRAWING OWNER.

CUSTOMER: TESORO SAVAGE PETROLEUM TERMINAL LLC

PROJECT: TESORO SAVAGE VANCOUVER ENERGY DISTRIBUTION TERMINAL LLC
PORT OF VANCOUVER, WASHINGTON

DESCRIPTION:
AREA 0500 PIPE VAULT PLAN VIEW
MK-VA-0500-03 & MK-VA-0500-04

DESIGN:	NMJ	START DATE:	08-06-13	SCALE:	AS NOTED
DRAWN:	NMJ/PDM	PRINT DATE:	11/14/14	PROJECT MANAGER:	DC
CHECKED:		APPROVED:		SIZE:	24x36

DRAWING NUMBER	SHEET	REV.
0500-FD-012	1/1	HH

EX-0001-007622-PCE

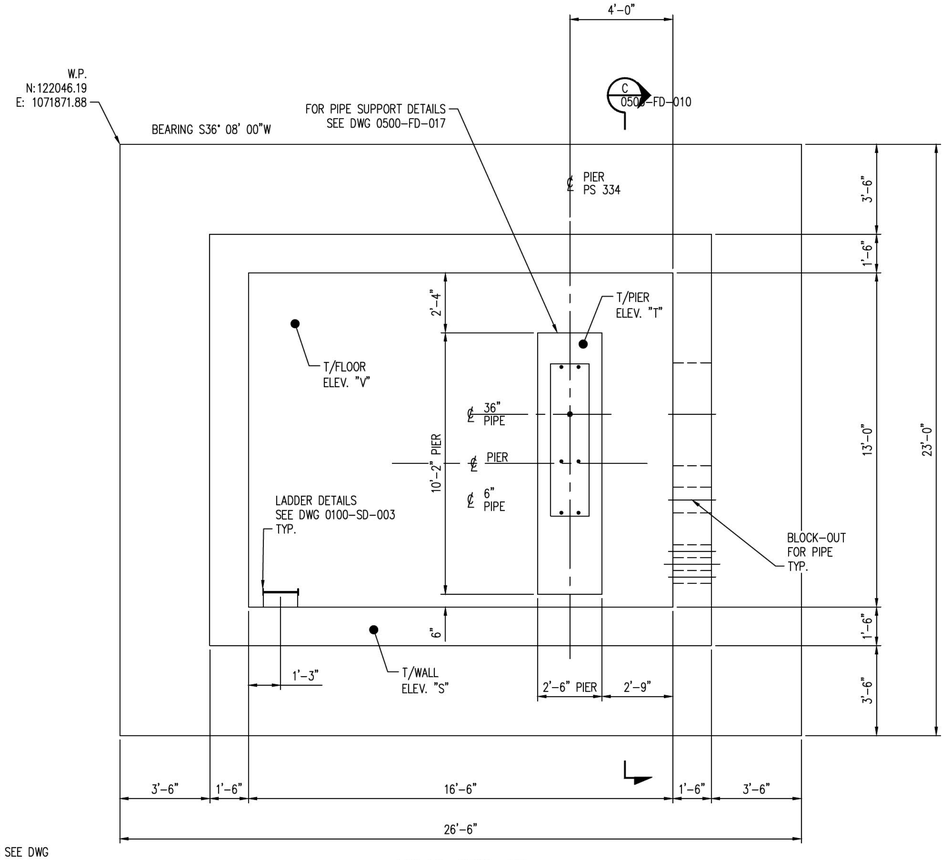

MK-VA-0500-05
3/16" = 1'-0"
FOR LOACTION SEE DWG 0500-FD-003

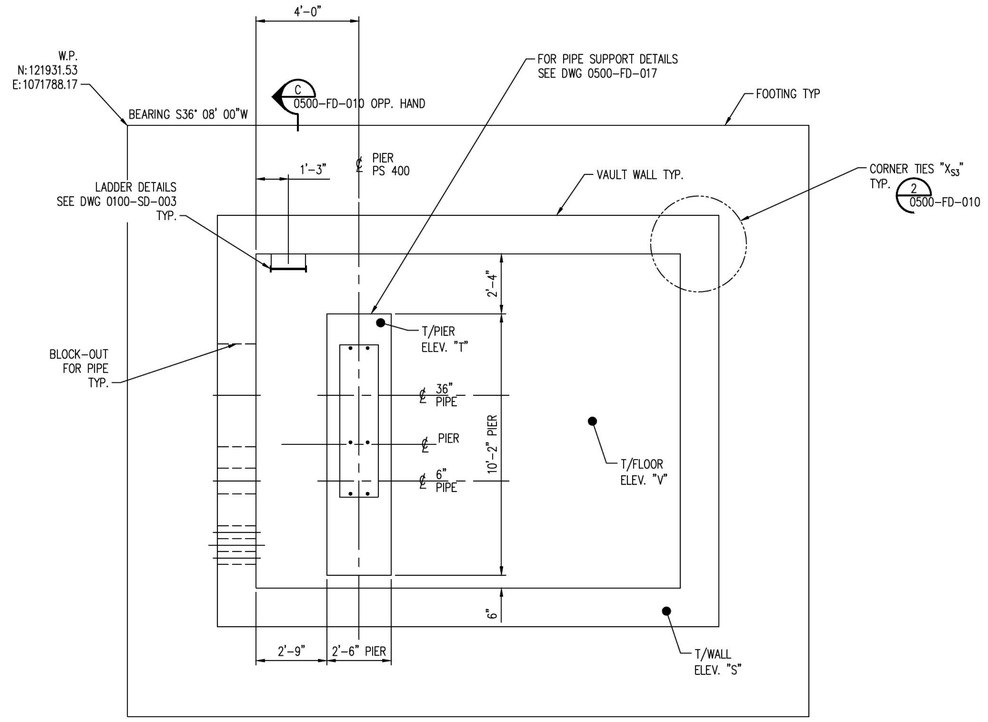

NOTE: FOR DIMENSIONS NOT
SHOWN SEE MK-VA-0500-05

MK-VA-0500-06
3/16" = 1'-0"
FOR LOACTION SEE DWG 0500-FD-004

NOTES:

1. FOR CONCRETE GENERAL NOTES SEE DWG 0100-FD-001.
2. BASE PLATE:
   A. SEE DWG 0100-FD-002 FOR DETAILS.
   B. TOLERANCE ON ELEVATION OF TOPS OF EMBEDDED PLATES ARE $\pm\frac{1}{8}$"
   C. BASE PLATES TO BE PROVIDED BY CONCRETE CONTRACTOR
3. ANCHOR ROD, SEE DWG 0100-FD-001 FOR SCHEDULE.
4. ALL REBAR DIMENSIONS ARE TO OUTSIDE OF REBAR U.N.O.
5. SEE FOOTING AND FOUNDATION PLOT PLAN FOR T/CONC. ELEVATIONS.

PRELIMINARY
NOT FOR CONSTRUCTION

Footing Schedule Area 0500 Vault

NO.	DATE	REVISION	BY	CK'D	APP
–	–	–	–	–	–
HH	11/14/14		NLB	–	–

R&M ENGINEERING CONSULTANTS
SALT LAKE CITY, UTAH
(801)263-3419
13014

TESORO SAVAGE

THIS DRAWING CONTAINS PROPRIETARY AND PRIVILEGED INFORMATION OF TESORO SAVAGE PETROLEUM LLC AND SHALL NOT BE DISCLOSED OR USED FOR THE BENEFIT OF OTHERS WITHOUT PRIOR WRITTEN PERMISSION OF THE DRAWING OWNER.

CUSTOMER: TESORO SAVAGE PETROLEUM TERMINAL LLC

PROJECT: TESORO SAVAGE VANCOUVER ENERGY DISTRIBUTION TERMINAL LLC
PORT OF VANCOUVER, WASHINGTON

DESCRIPTION:
AREA 0500 PIPE VAULT PLAN VIEW
MK-VA-0500-05 & MK-VA-0500-06

DESIGN: NMJ	START DATE: 08-06-13	SCALE:	AS NOTED
DRAWN: NMJ/PDM	PRINT DATE: 11/14/14	PROJECT MANAGER:	DC
CHECKED:	APPROVED:	SIZE:	24x36

DRAWING NUMBER	SHEET	REV.
0500-FD-013	1/1	HH

EX-0001-007623-PCE

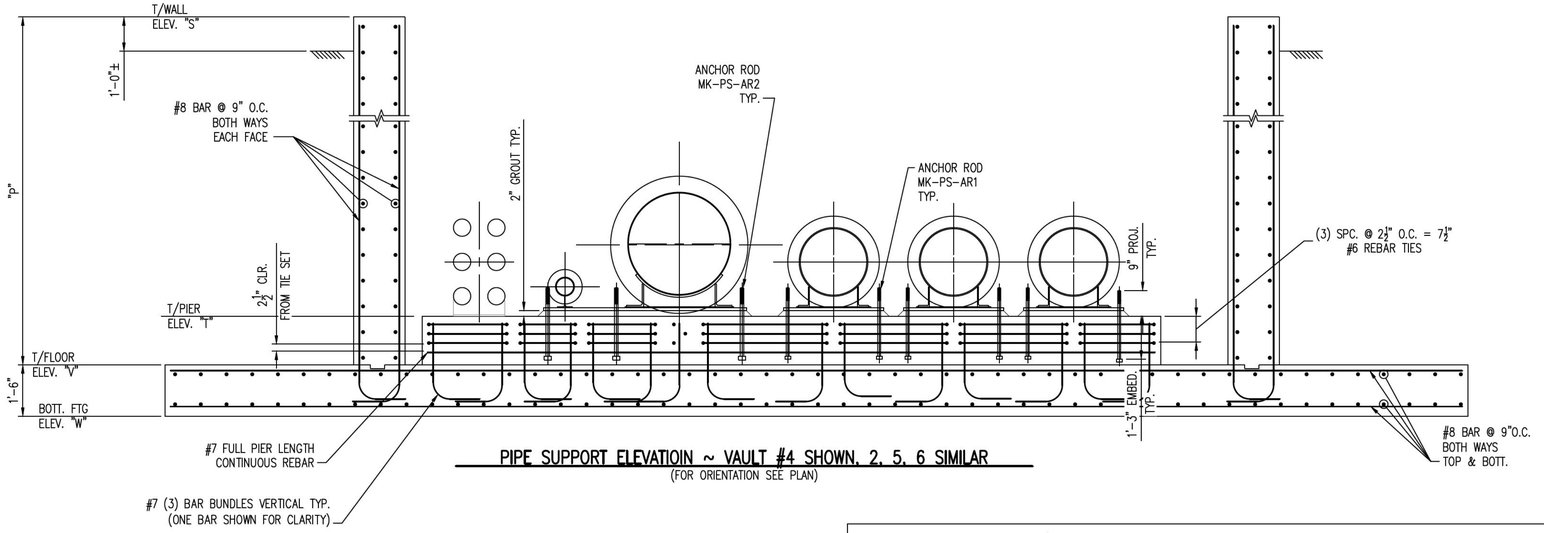

PIPE SUPPORT ELEVATIOIN ~ VAULT #4 SHOWN, 2, 5, 6 SIMILAR
(FOR ORIENTATION SEE PLAN)

Vault Elevation	
Vault Type	
V-2	Similar
V-4	**Shown**
V-5	Similar
V-6	Similar

PRELIMINARY
NOT FOR CONSTRUCTION

NOTES:

1. FOR CONCRETE GENERAL NOTES SEE DWG 0100-FD-001.
2. BASE PLATE:
   A. SEE DWG 0100-FD-002 FOR DETAILS.
   B. TOLERANCE ON ELEVATION OF TOPS OF EMBEDDED PLATES ARE ±¼"
   C. BASE PLATES TO BE PROVIDED BY CONCRETE CONTRACTOR
3. ANCHOR ROD, SEE DWG 0100-FD-001 FOR SCHEDULE.
4. ALL REBAR DIMENSIONS ARE TO OUTSIDE OF REBAR U.N.O.
5. SEE FOOTING AND FOUNDATION PLOT PLAN FOR T/CONC. ELEVATIONS.

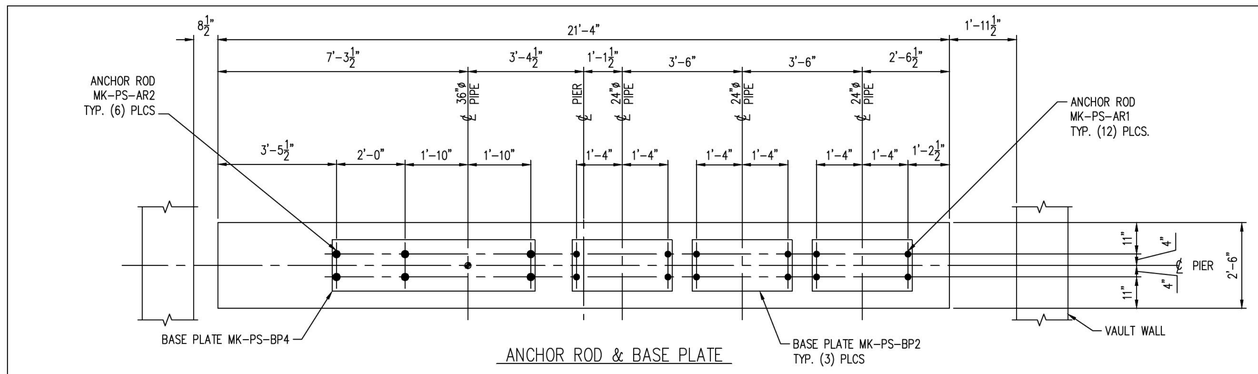

ANCHOR ROD & BASE PLATE

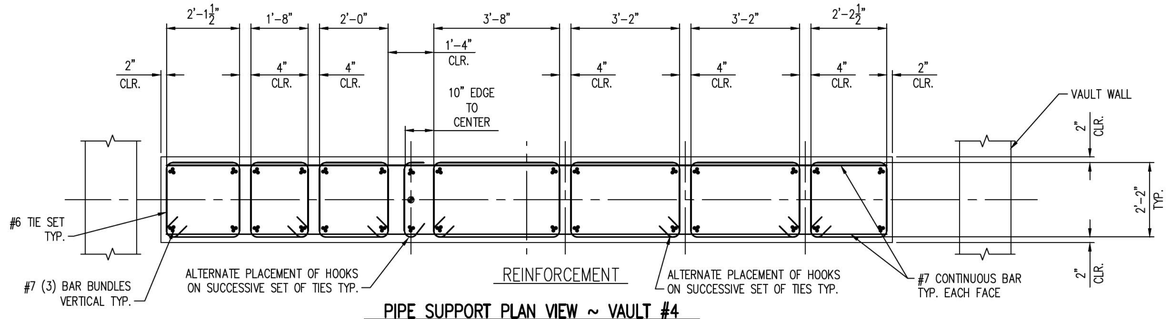

PIPE SUPPORT PLAN VIEW ~ VAULT #4
(FOR ORIENTATION SEE PLAN)

Footing Schedule Area 0500 Vault

NO.	DATE	REVISION	BY	CK'D	APP
–	–	–	–	–	–
HH	11/14/14		NLB	–	–

R&M ENGINEERING CONSULTANTS
SALT LAKE CITY, UTAH
(801)263-3419
13014

TESORO SAVAGE

THIS DRAWING CONTAINS PROPRIETARY AND PRIVILEGED INFORMATION OF TESORO SAVAGE PETROLEUM LLC AND SHALL NOT BE DISCLOSED OR USED FOR THE BENEFIT OF OTHERS WITHOUT PRIOR WRITTEN PERMISSION OF THE DRAWING OWNER.

CUSTOMER: TESORO SAVAGE PETROLEUM TERMINAL LLC

PROJECT: TESORO SAVAGE VANCOUVER ENERGY DISTRIBUTION TERMINAL LLC
PORT OF VANCOUVER, WASHINGTON

DESCRIPTION:
AREA 0500 PIPE VAULT
VAULT ELEVATION #2, #4, #5, & #6, PIER DETAILS #4

DESIGN:	PDM/NMJ	START DATE:	08-06-13	SCALE:	AS NOTED
DRAWN:	PDM/NMJ	PRINT DATE:	11/14/14	PROJECT MANAGER:	DC
CHECKED:		APPROVED:		SIZE:	24x36

DRAWING NUMBER	SHEET	REV.
0500-FD-014	1/1	HH

EX-0001-007624-PCE

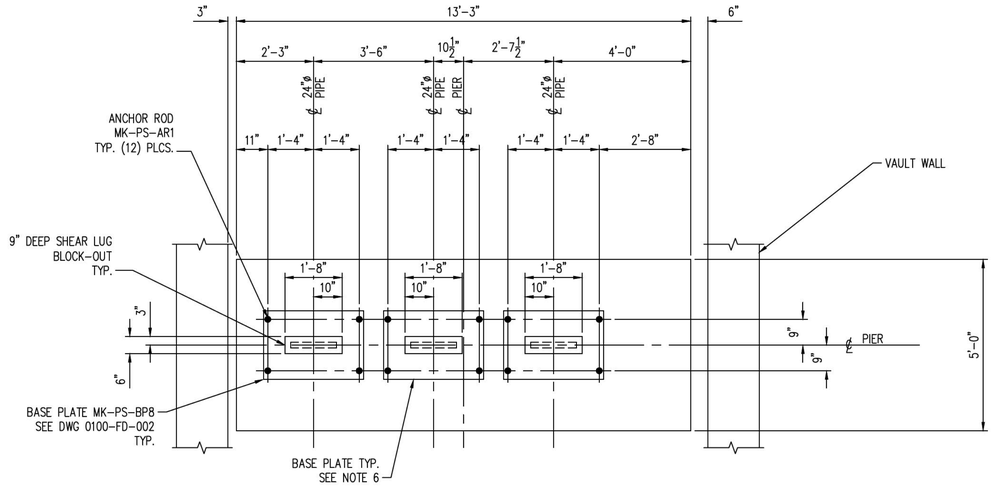

ANCHOR ROD & BASE PLATE

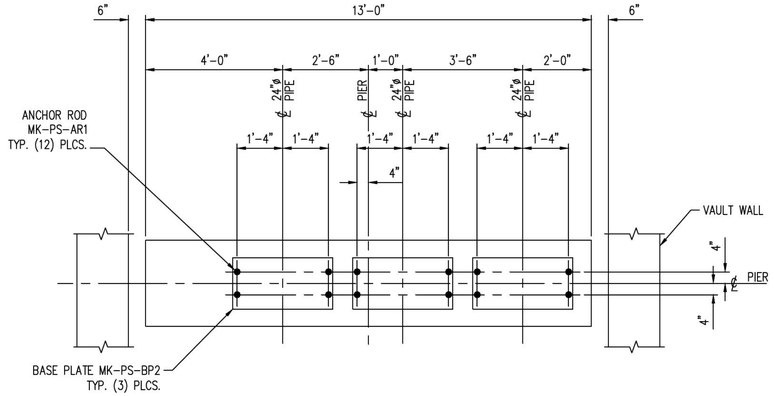

ANCHOR ROD & BASE PLATE

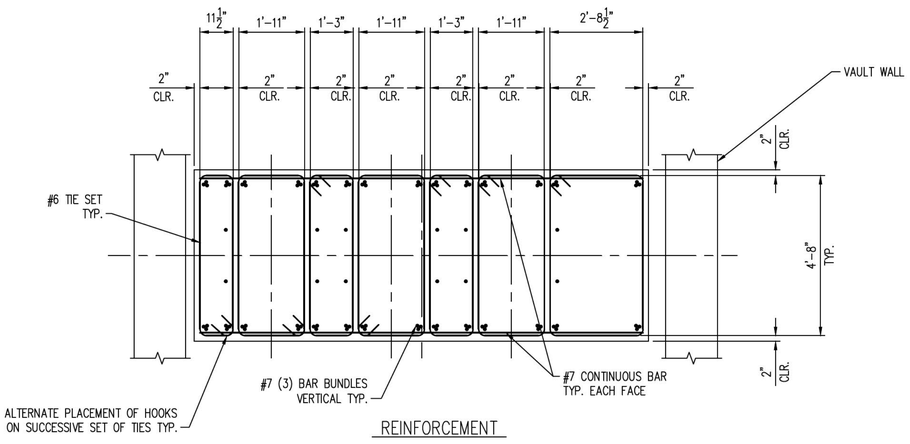

REINFORCEMENT

PIPE SUPPORT PLAN VIEW ~ VAULT #1
(FOR ORIENTATION SEE PLAN)

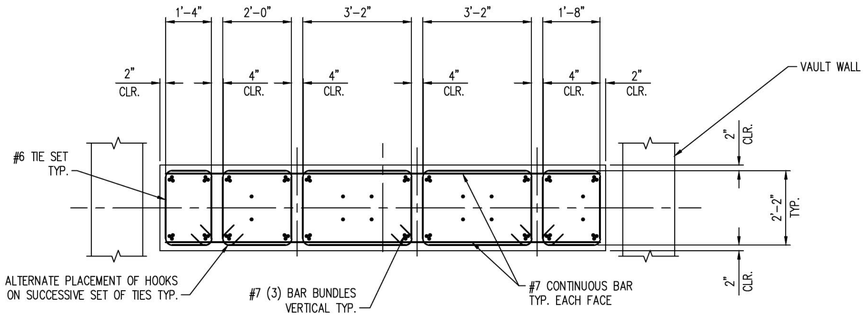

REINFORCEMENT

PIPE SUPPORT PLAN VIEW ~ VAULT #2
(FOR ORIENTATION SEE PLAN)

PRELIMINARY
NOT FOR CONSTRUCTION

NOTES:

1. FOR CONCRETE GENERAL NOTES SEE DWG 0100-FD-001.
2. BASE PLATE:
   A. SEE DWG 0100-FD-002 FOR DETAILS.
   B. TOLERANCE ON ELEVATION OF TOPS OF EMBEDDED PLATES ARE ±⅛"
   C. BASE PLATES TO BE PROVIDED BY CONCRETE CONTRACTOR
3. ANCHOR ROD, SEE DWG 0100-FD-001 FOR SCHEDULE.
4. ALL REBAR DIMENSIONS ARE TO OUTSIDE OF REBAR U.N.O.
5. SEE FOOTING AND FOUNDATION PLOT PLAN FOR T/CONC. ELEVATIONS.

Footing Schedule Area 0500 Vault

NO.	DATE	REVISION	BY	CK'D	APP
–	–	–	–	–	–
HH	11/14/14		NLB	–	–

R&M ENGINEERING CONSULTANTS
SALT LAKE CITY, UTAH
(801)263-3419
13014

TESORO SAVAGE

THIS DRAWING CONTAINS PROPRIETARY AND PRIVILEGED INFORMATION OF TESORO SAVAGE PETROLEUM LLC AND SHALL NOT BE DISCLOSED OR USED FOR THE BENEFIT OF OTHERS WITHOUT PRIOR WRITTEN PERMISSION OF THE DRAWING OWNER.

CUSTOMER: TESORO SAVAGE PETROLEUM TERMINAL LLC

PROJECT: TESORO SAVAGE VANCOUVER ENERGY DISTRIBUTION TERMINAL LLC
PORT OF VANCOUVER, WASHINGTON

DESCRIPTION:
AREA 0500 PIPE VAULT
PIER DETAILS VAULTS #1 & #2

DESIGN: PDM	START DATE: 08-06-13	SCALE: NTS	
DRAWN: PDM	PRINT DATE: 11/14/14	PROJECT MANAGER: DC	
CHECKED:	APPROVED:	SIZE: 24x36	
DRAWING NUMBER: 0500-FD-015		SHEET: 1/1	REV.: HH

EX-0001-007625-PCE

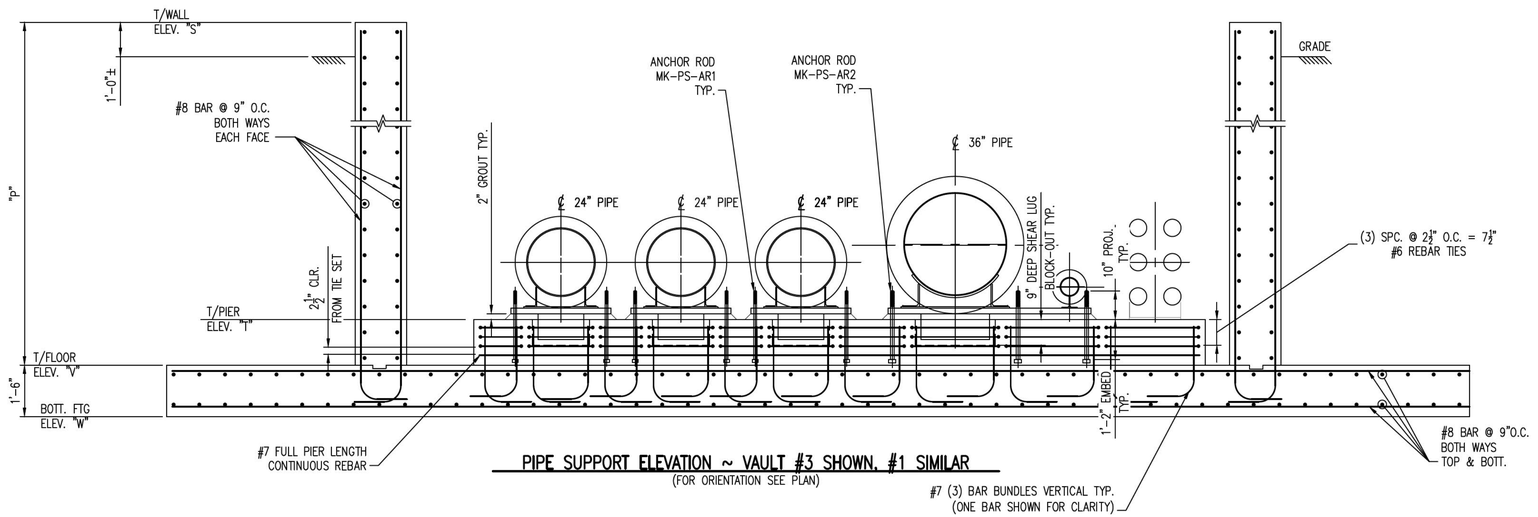

PIPE SUPPORT ELEVATION ~ VAULT #3 SHOWN, #1 SIMILAR
(FOR ORIENTATION SEE PLAN)

PRELIMINARY
NOT FOR CONSTRUCTION

NOTES:

1. FOR CONCRETE GENERAL NOTES SEE DWG 0100-FD-001.
2. BASE PLATE:
   A. SEE DWG 0100-FD-002 FOR DETAILS.
   B. TOLERANCE ON ELEVATION OF TOPS OF EMBEDDED PLATES ARE ±⅛"
   C. BASE PLATES TO BE PROVIDED BY CONCRETE CONTRACTOR
3. ANCHOR ROD, SEE DWG 0100-FD-001 FOR SCHEDULE.
4. ALL REBAR DIMENSIONS ARE TO OUTSIDE OF REBAR U.N.O.
5. SEE FOOTING AND FOUNDATION PLOT PLAN FOR T/CONC. ELEVATIONS.

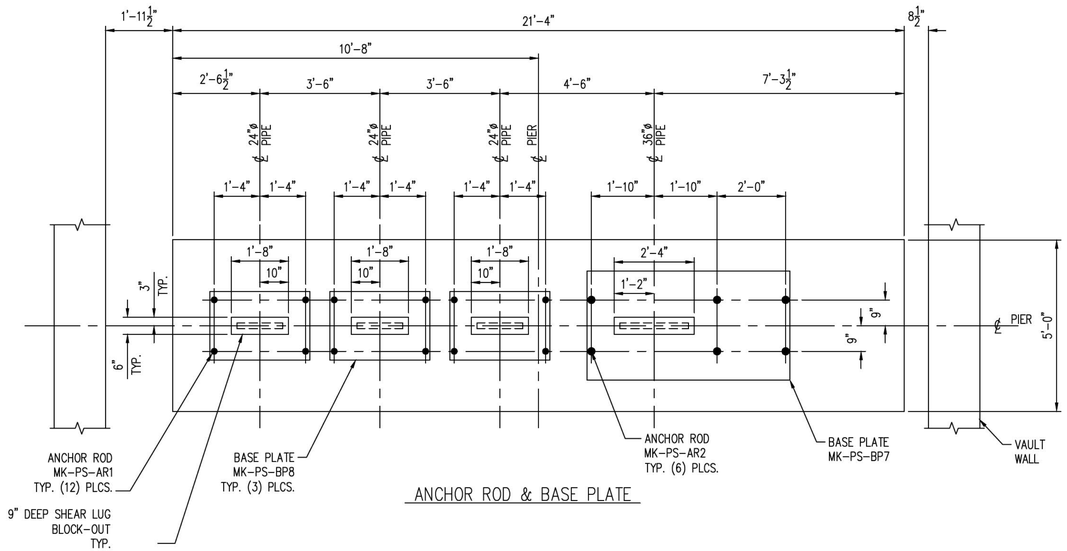

ANCHOR ROD & BASE PLATE

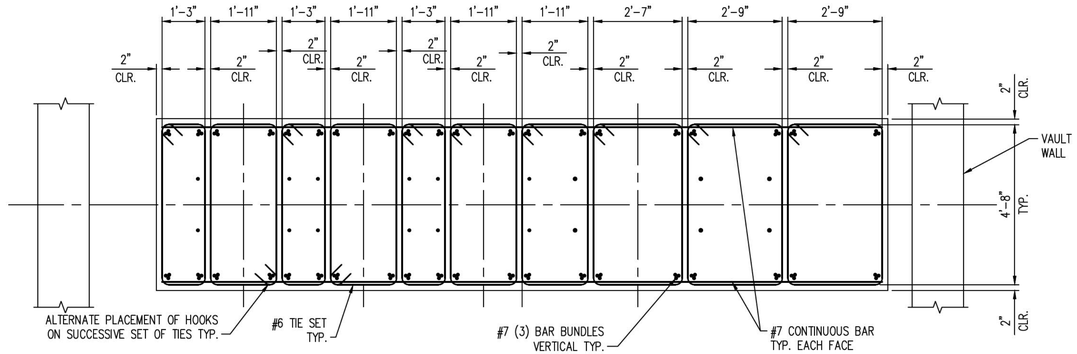

REINFORCEMENT

PIPE SUPPORT PLAN VIEW ~ VAULT #3
(FOR ORIENTATION SEE PLAN)

NO.	DATE	REVISION	BY	CK'D	APP
–	–	–	–	–	–
HH	11/14/14		NLB	–	–

R&M ENGINEERING CONSULTANTS
SALT LAKE CITY, UTAH
(801)263-3419
13014

TESORO SAVAGE

THIS DRAWING CONTAINS PROPRIETARY AND PRIVILEGED INFORMATION OF TESORO SAVAGE PETROLEUM LLC AND SHALL NOT BE DISCLOSED OR USED FOR THE BENEFIT OF OTHERS WITHOUT PRIOR WRITTEN PERMISSION OF THE DRAWING OWNER.

CUSTOMER: TESORO SAVAGE PETROLEUM TERMINAL LLC

PROJECT: TESORO SAVAGE VANCOUVER ENERGY DISTRIBUTION TERMINAL LLC
PORT OF VANCOUVER, WASHINGTON

DESCRIPTION:
AREA 0500 PIPE VAULT
VAULT ELEVATION #1 & #3 , PIER DETAILS #3

DESIGN:	PDM/NMJ	START DATE:	08-06-13	SCALE:	NTS
DRAWN:	PDM/NMJ	PRINT DATE:	11/14/14	PROJECT MANAGER:	DC
CHECKED:		APPROVED:		SIZE:	24x36

DRAWING NUMBER	SHEET	REV.
0500-FD-016	1/1	HH

Footing Schedule Area 0500 Vault

EX-0001-007626-PCE

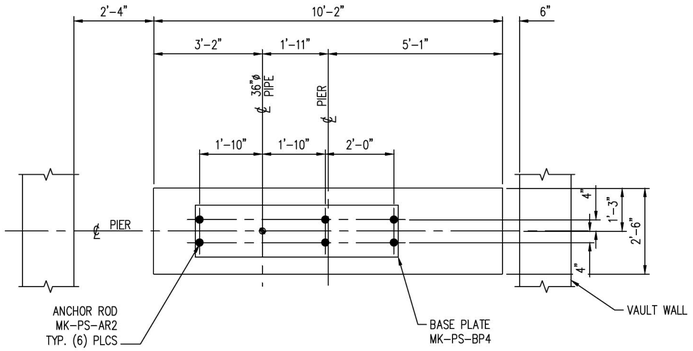

ANCHOR ROD & BASE PLATE

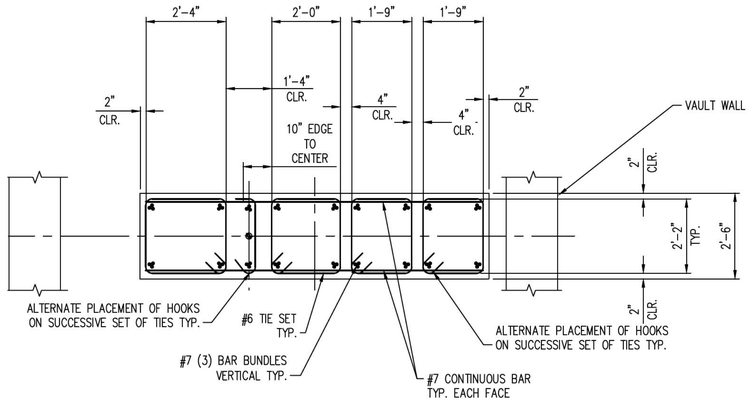

REINFORCEMENT

PIPE SUPPORT PLAN VIEW ~ VAULTS #5 THUS, #6 OPP. HAND

(FOR ORIENTATION SEE PLAN)

PRELIMINARY

NOT FOR CONSTRUCTION

NOTES:

1. FOR CONCRETE GENERAL NOTES SEE DWG 0100-FD-001.
2. BASE PLATE:
   A. SEE DWG 0100-FD-002 FOR DETAILS.
   B. TOLERANCE ON ELEVATION OF TOPS OF EMBEDDED PLATES ARE ±1/8"
   C. BASE PLATES TO BE PROVIDED BY CONCRETE CONTRACTOR
3. ANCHOR ROD, SEE DWG 0100-FD-001 FOR SCHEDULE.
4. ALL REBAR DIMENSIONS ARE TO OUTSIDE OF REBAR U.N.O.
5. SEE FOOTING AND FOUNDATION PLOT PLAN FOR T/CONC. ELEVATIONS.

Footing Schedule Area 0500 Vault

NO.	DATE	REVISION	BY	CK'D	APP
–	–	–	–	–	–
HH	11/14/14		NLB	–	–

R&M ENGINEERING CONSULTANTS
SALT LAKE CITY, UTAH
(801)263-3419

13014

TESORO SAVAGE

THIS DRAWING CONTAINS PROPRIETARY AND PRIVILEGED INFORMATION OF TESORO SAVAGE PETROLEUM LLC AND SHALL NOT BE DISCLOSED OR USED FOR THE BENEFIT OF OTHERS WITHOUT PRIOR WRITTEN PERMISSION OF THE DRAWING OWNER.

CUSTOMER: TESORO SAVAGE PETROLEUM TERMINAL LLC

PROJECT: TESORO SAVAGE VANCOUVER ENERGY DISTRIBUTION TERMINAL LLC
PORT OF VANCOUVER, WASHINGTON

DESCRIPTION:
AREA 0500 PIPE VAULT
PIER DETAILS VAULTS #5 & #6

DESIGN: PDM	START DATE: 08-06-13	SCALE: NTS	
DRAWN: PDM	PRINT DATE: 11/14/14	PROJECT MANAGER: DC	
CHECKED:	APPROVED:	SIZE: 24x36	
DRAWING NUMBER		SHEET	REV.
0500-FD-017		1/1	HH

EX-0001-007627-PCE

PIPE SUPPORT - PS - FOOTING SCHEDULE

FTG. MK.	Remarks	QTY	Ftg. Details DWG #	Quantity of Base Plate MK-PS-___ (See dwg 0100-FD-002 for details)						Quantity of Anchor Rods MK-PS-___ (See dwg 0100-FD-001 for details)								Made BY	Checked By
				BP 2	BP 4	BP 6	BP 7	BP 8	BP 9	AR1	AR2	AR3	AR4	AR13	AR14	AR15	AR18		
MK-PS-0500-F1	Support/Guide	29	0500-FD-020	3						12								MWD	
MK-PS-0500-F2	Anchor	3	0500-FD-021					3				12						MWD	
MK-PS-0500-F3	Support/Guide	1	0500-FD-022	2						8								MWD	
MK-PS-0500-F4	Support/Guide	57	0500-FD-023		1						6							MWD	
MK-PS-0500-F5	Anchor	5	0500-FD-023				1						6					MWD	
MK-PS-0500-F6	Support/Guide	4	0500-FD-024	1						4								MWD	
MK-PS-0500-F7	Support/Guide	35	0500-FD-025	3	1					12	6							MWD	
MK-PS-0500-F8	Support/Guide	3	0500-FD-026				1	3				12	6					MWD	
MK-PS-0500-F9	Anchor	1	0500-FD-027			1					4							MWD	
MK-PS-0500-F10	Support/Guide	1	0500-FD-028	3	1					12	6					4		MWD	
MK-PS-0500-F11	Cable Tray Only	2	0500-FD-029				1	3				12	6					MWD	
MK-PS-0500-F12	Support/Guide	1	0500-FD-030	3	1					12	6							MWD	
MK-PS-0500-F20	Support/Guide	4	0500-FD-031	2					1	14								MWD	
MK-PS-0500-F21																			
MK-PS-0500-F22	Trans. Pipeline	5	0500-FD-032											8				MWD	
MK-PS-0500-F23	Bridge #1	1	0500-FD-032											16				MWD	
MK-PS-0500-F24	*Expansion Loop*	*1*	*0500-FD-033*														8	NMJ	
MK-PS-0500-F25	*Expansion Loop*	*3*	*0500-FD-034*														8	NMJ	
MK-PS-0500-F30	T.P. Bridge #2	1	0500-FD-032												4			MWD	
MK-PS-0500-F31	T.P. Bridge #3	5	0500-FD-032													4		MWD	
MK-PS-0500-F32	*Expansion Loop*	*2*	*0500-FD-035*														8	NMJ	
MK-PS-0500-F33	*Expansion Loop*	*1*	*0500-FD-032*														8	NMJ	
MK-PS-0500-F34	T.P. Bridge #2	1	0500-FD-032												4			MWD	

See Drawings 0500-FD-001 to 0500-FD-08 for Foundation Plot Plan

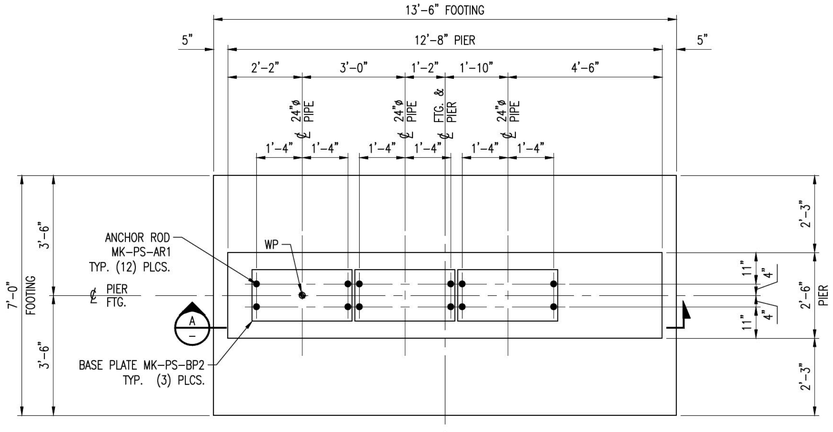

MK-PS-0500-F1
1/2" = 1'-0"

PRELIMINARY
NOT FOR CONSTRUCTION

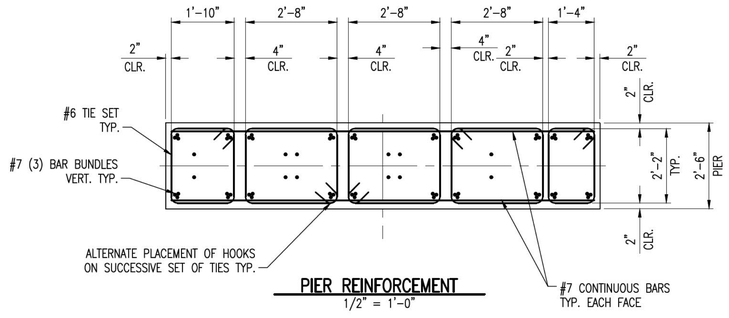

PIER REINFORCEMENT
1/2" = 1'-0"

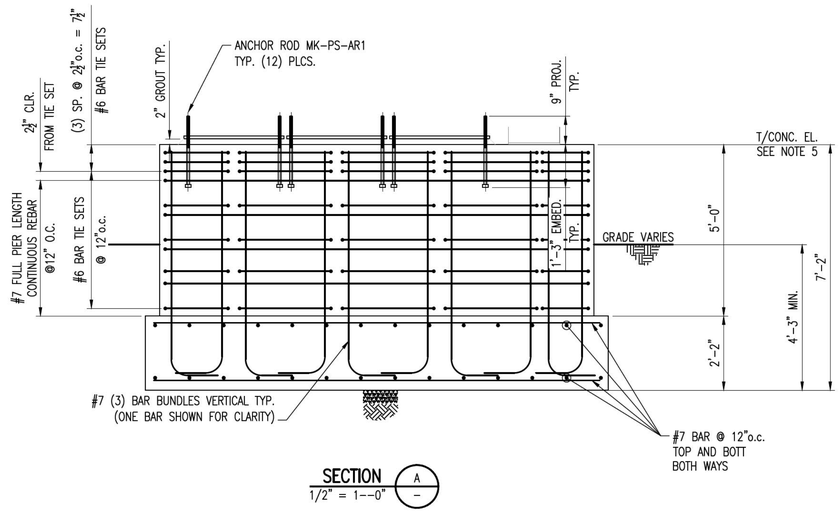

SECTION A
1/2" = 1'-0"

NOTES:

1. FOR CONCRETE GENERAL NOTES SEE DWG 0100-FD-001.
2. BASE PLATE:
   A. SEE DWG 0100-FD-002 FOR DETAILS.
   B. TOLERANCE ON ELEVATION OF TOPS OF EMBEDDED PLATES ARE ±⅛"
   C. BASE PLATES TO BE PROVIDED BY CONCRETE CONTRACTOR
3. ANCHOR ROD, SEE DWG 0100-FD-001 FOR SCHEDULE.
4. ALL REBAR DIMENSIONS ARE TO OUTSIDE OF REBAR U.N.O.
5. SEE FOOTING AND FOUNDATION PLOT PLAN FOR T/CONC. ELEVATIONS.

NO.	DATE	REVISION	BY	CK'D	APP
HH	11/14/14		NLB	–	–

R&M ENGINEERING CONSULTANTS
SALT LAKE CITY, UTAH
(801)263-3419
13014

TESORO SAVAGE

THIS DRAWING CONTAINS PROPRIETARY AND PRIVILEGED INFORMATION OF TESORO SAVAGE PETROLEUM LLC AND SHALL NOT BE DISCLOSED OR USED FOR THE BENEFIT OF OTHERS WITHOUT PRIOR WRITTEN PERMISSION OF THE DRAWING OWNER.

CUSTOMER: TESORO SAVAGE PETROLEUM TERMINAL LLC

PROJECT: TESORO SAVAGE VANCOUVER ENERGY DISTRIBUTION TERMINAL LLC
PORT OF VANCOUVER, WASHINGTON

DESCRIPTION: AREA 0500 PIPE FOOTING SCHEDULE
MK-PS-0500-F1

DESIGN:		START DATE: 08-04-13	SCALE: 1/2" = 1'-0"
DRAWN: PDM		PRINT DATE:	PROJECT MANAGER: DC
CHECKED:		APPROVED:	SIZE: 24x36
DRAWING NUMBER			SHEET 1/1 REV. HH
0500-FD-020			

Footing Schedule Area 0500 Pipe

EX-0001-007628-PCE

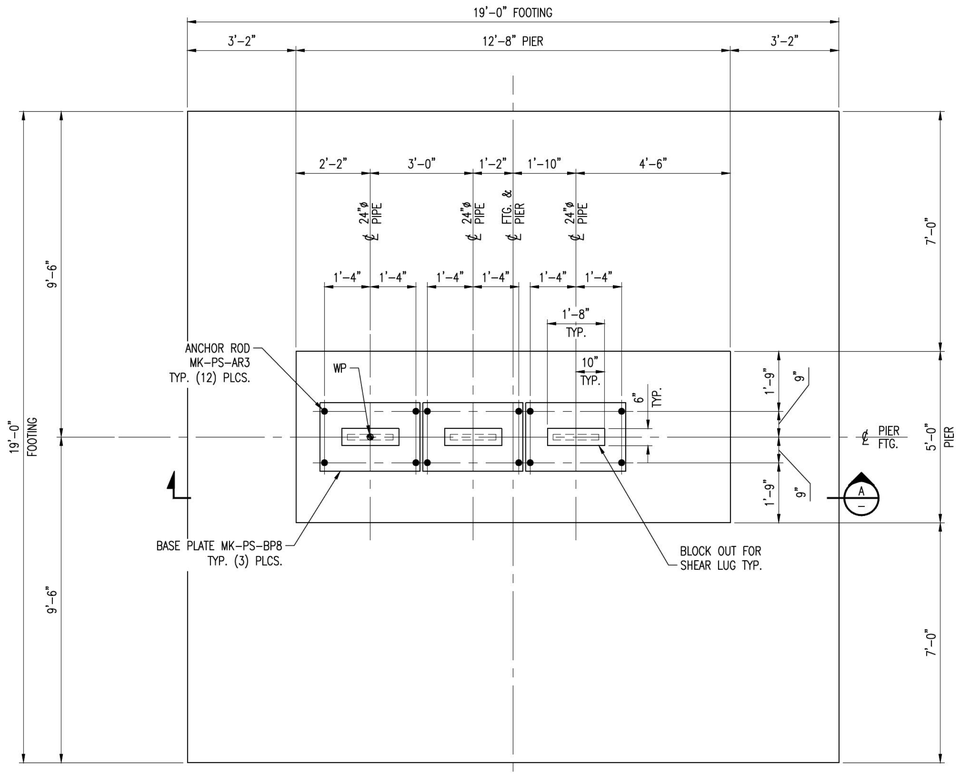

MK-PS-0500-F2
PLAN VIEW

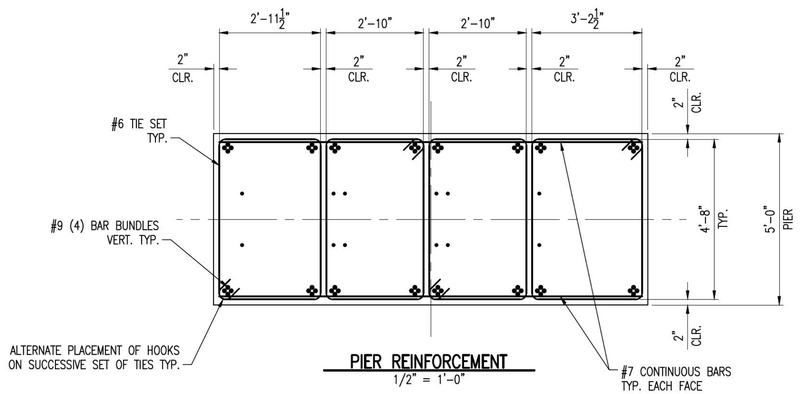

PIER REINFORCEMENT
1/2" = 1'-0"

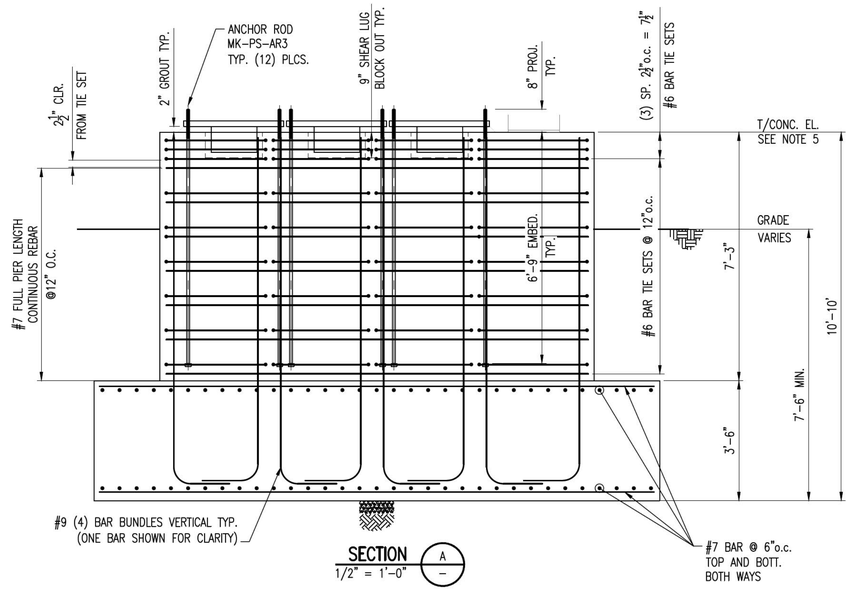

SECTION
1/2" = 1'-0"

NOTES:
1. FOR CONCRETE GENERAL NOTES SEE DWG 0100-FD-001.
2. BASE PLATE:
   A. SEE DWG 0100-FD-002 FOR DETAILS.
   B. TOLERANCE ON ELEVATION OF TOPS OF EMBEDDED PLATES ARE ±⅛"
   C. BASE PLATES TO BE PROVIDED BY CONCRETE CONTRACTOR
3. ANCHOR ROD, SEE DWG 0100-FD-001 FOR SCHEDULE.
4. ALL REBAR DIMENSIONS ARE TO OUTSIDE OF REBAR U.N.O.
5. SEE FOOTING AND FOUNDATION PLOT PLAN FOR T/CONC. ELEVATIONS.

NO.	DATE	REVISION	BY	CK'D	APP
HH	11/14/14		NLB	–	–

R&M ENGINEERING CONSULTANTS
SALT LAKE CITY, UTAH
(801)263-3419

13014

TESORO SAVAGE

THIS DRAWING CONTAINS PROPRIETARY AND PRIVILEGED INFORMATION OF TESORO SAVAGE PETROLEUM LLC AND SHALL NOT BE DISCLOSED OR USED FOR THE BENEFIT OF OTHERS WITHOUT PRIOR WRITTEN PERMISSION OF THE DRAWING OWNER.

CUSTOMER: TESORO SAVAGE PETROLEUM TERMINAL LLC

PROJECT: TESORO SAVAGE VANCOUVER ENERGY DISTRIBUTION TERMINAL LLC
PORT OF VANCOUVER, WASHINGTON

DESCRIPTION:
AREA 0500 PIPE FOOTING SCHEDULE
MK-PS-0500-F2

DESIGN:	START DATE: 08-04-13	SCALE: NTS	
DRAWN: PDM	PRINT DATE:	PROJECT MANAGER: DC	
CHECKED:	APPROVED:	SIZE: 24x36	
DRAWING NUMBER: 0500-FD-021		SHEET: 1/1	REV: HH

Footing Schedule Area 0500 Pipe

EX-0001-007629-PCE

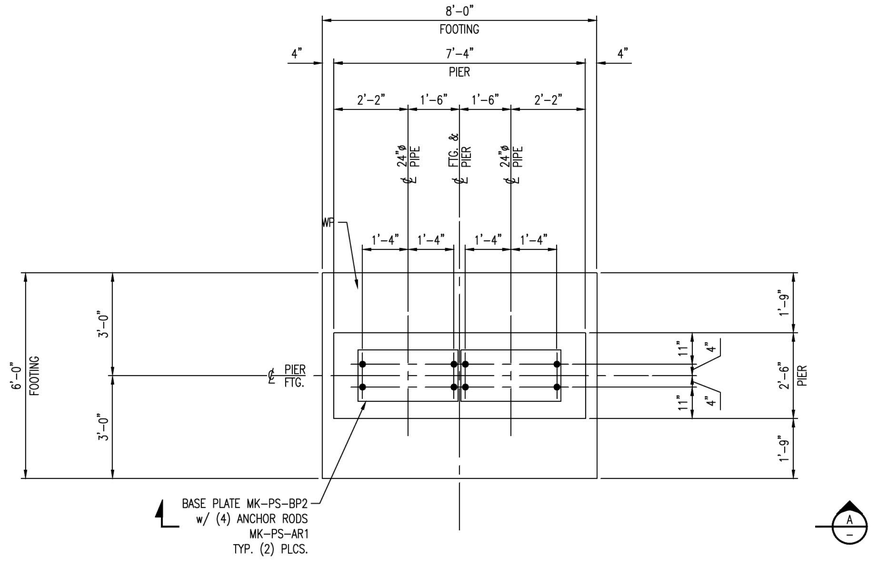

MK-PS-0500-F3
1/2" = 1'-0"
PLAN VIEW

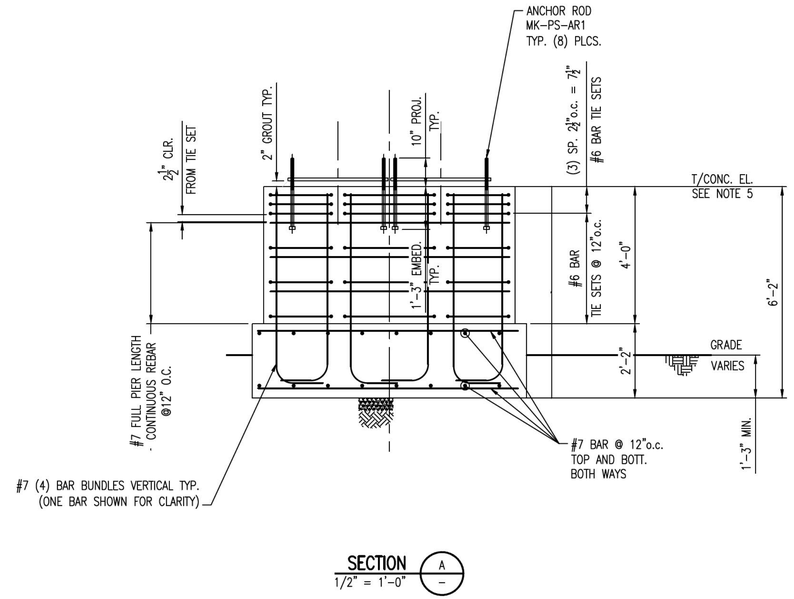

SECTION A
1/2" = 1'-0"

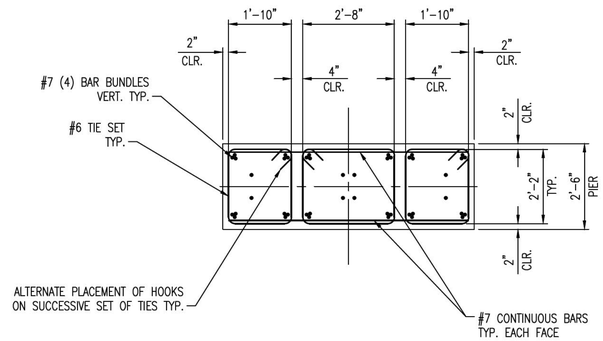

PIER REINFORCEMENT
1/2" = 1'-0"

NOTES:
1. FOR CONCRETE GENERAL NOTES SEE DWG 0100-FD-001.
2. BASE PLATE:
   A. SEE DWG 0100-FD-002 FOR DETAILS.
   B. TOLERANCE ON ELEVATION OF TOPS OF EMBEDDED PLATES ARE ±⅛"
   C. BASE PLATES TO BE PROVIDED BY CONCRETE CONTRACTOR
3. ANCHOR ROD, SEE DWG 0100-FD-001 FOR SCHEDULE.
4. ALL REBAR DIMENSIONS ARE TO OUTSIDE OF REBAR U.N.O.
5. SEE FOOTING AND FOUNDATION PLOT PLAN FOR T/CONC. ELEVATIONS.

Footing Schedule Area 0500 Pipe

NO.	DATE	REVISION	BY	CK'D	APP
HH	11/14/14		NLB	–	–

R&M ENGINEERING CONSULTANTS
SALT LAKE CITY, UTAH
(801)263-3419
13014

TESORO SAVAGE

THIS DRAWING CONTAINS PROPRIETARY AND PRIVILEGED INFORMATION OF TESORO SAVAGE PETROLEUM LLC AND SHALL NOT BE DISCLOSED OR USED FOR THE BENEFIT OF OTHERS WITHOUT PRIOR WRITTEN PERMISSION OF THE DRAWING OWNER.

CUSTOMER: TESORO SAVAGE PETROLEUM TERMINAL LLC

PROJECT: TESORO SAVAGE VANCOUVER ENERGY DISTRIBUTION TERMINAL LLC
PORT OF VANCOUVER, WASHINGTON

DESCRIPTION: AREA 0500 PIPE FOOTING SCHEDULE
MK-PS-0500-F3

DESIGN:	START DATE: 08-04-13	SCALE: NTS	
DRAWN: PDM	PRINT DATE:	PROJECT MANAGER: DC	
CHECKED:	APPROVED:	SIZE: 24x36	
DRAWING NUMBER: 0500-FD-022		SHEET: 1/1	REV: HH

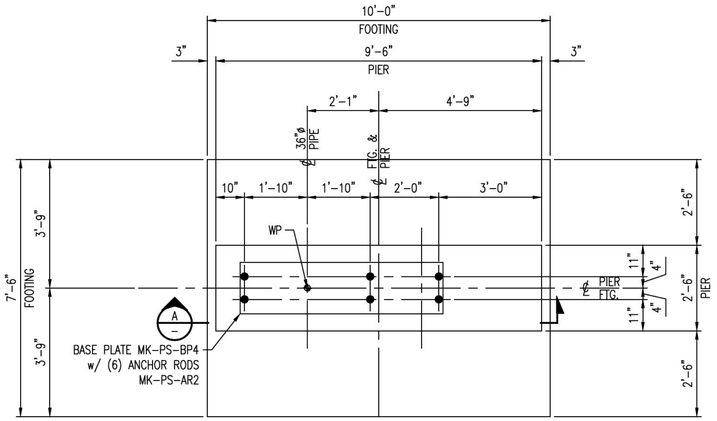

MK-PS-0500-F4

1/2" = 1'-0"

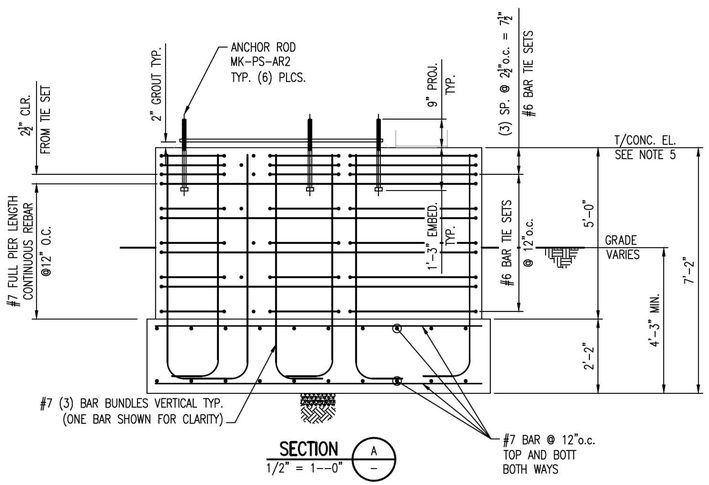

SECTION

1/2" = 1'-0"

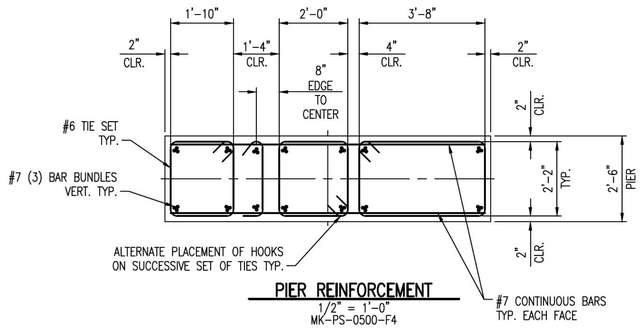

PIER REINFORCEMENT

1/2" = 1'-0"
MK-PS-0500-F4

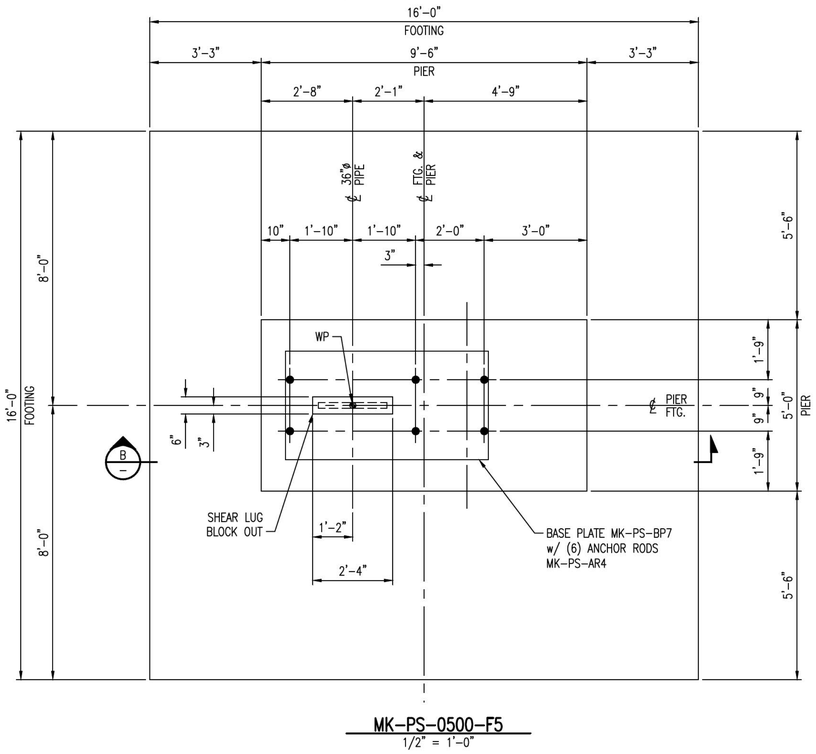

MK-PS-0500-F5

1/2" = 1'-0"

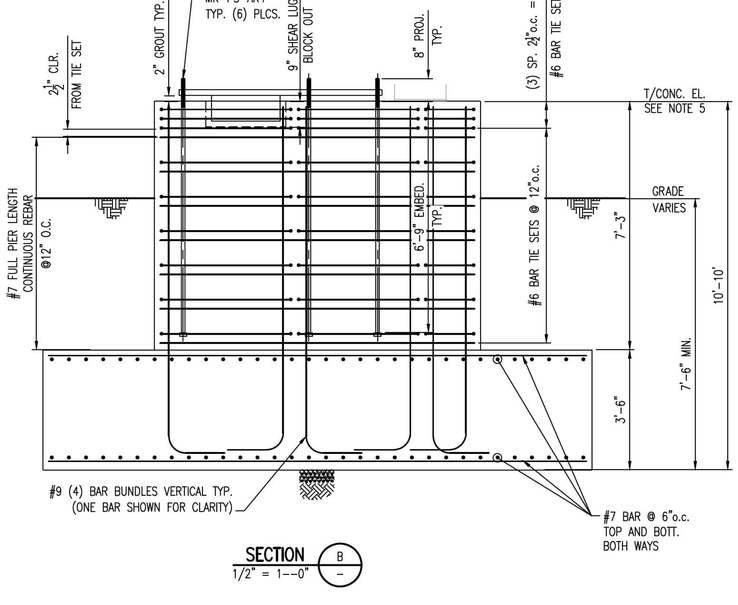

SECTION

1/2" = 1'-0"

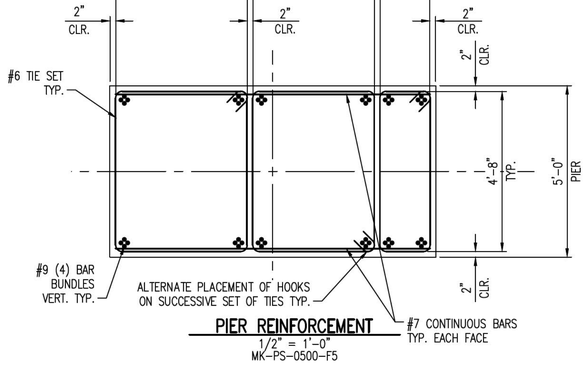

PIER REINFORCEMENT

1/2" = 1'-0"
MK-PS-0500-F5

PRELIMINARY

NOT FOR CONSTRUCTION

NOTES:

1. FOR CONCRETE GENERAL NOTES SEE DWG 0100-FD-001.
2. BASE PLATE:
   A. SEE DWG 0100-FD-002 FOR DETAILS.
   B. TOLERANCE ON ELEVATION OF TOPS OF EMBEDDED PLATES ARE ±¼"
   C. BASE PLATES TO BE PROVIDED BY CONCRETE CONTRACTOR
3. ANCHOR ROD, SEE DWG 0100-FD-001 FOR SCHEDULE.
4. ALL REBAR DIMENSIONS ARE TO OUTSIDE OF REBAR U.N.O.
5. SEE FOOTING AND FOUNDATION PLOT PLAN FOR T/CONC. ELEVATIONS.

Footing Schedule Area 0500 Pipe

NO.	DATE	REVISION	BY	CK'D	APP
HH	11/14/14		NLB	–	–

R&M ENGINEERING CONSULTANTS
SALT LAKE CITY, UTAH
(801)263-3419

13014

TESORO SAVAGE

THIS DRAWING CONTAINS PROPRIETARY AND PRIVILEGED INFORMATION OF TESORO SAVAGE PETROLEUM LLC AND SHALL NOT BE DISCLOSED OR USED FOR THE BENEFIT OF OTHERS WITHOUT PRIOR WRITTEN PERMISSION OF THE DRAWING OWNER.

CUSTOMER: TESORO SAVAGE PETROLEUM TERMINAL LLC

PROJECT: TESORO SAVAGE VANCOUVER ENERGY DISTRIBUTION TERMINAL LLC
PORT OF VANCOUVER, WASHINGTON

DESCRIPTION: AREA 0500 PIPE FOOTING SCHEDULE
MK-PS-0500-F4 & F5

DESIGN:		START DATE:	08-04-13	SCALE:	NTS
DRAWN:	PDM	PRINT DATE:		PROJECT MANAGER:	DC
CHECKED:		APPROVED:		SIZE:	24x36

DRAWING NUMBER	SHEET	REV.
0500-FD-023	1/1	HH

EX-0001-007631-PCE

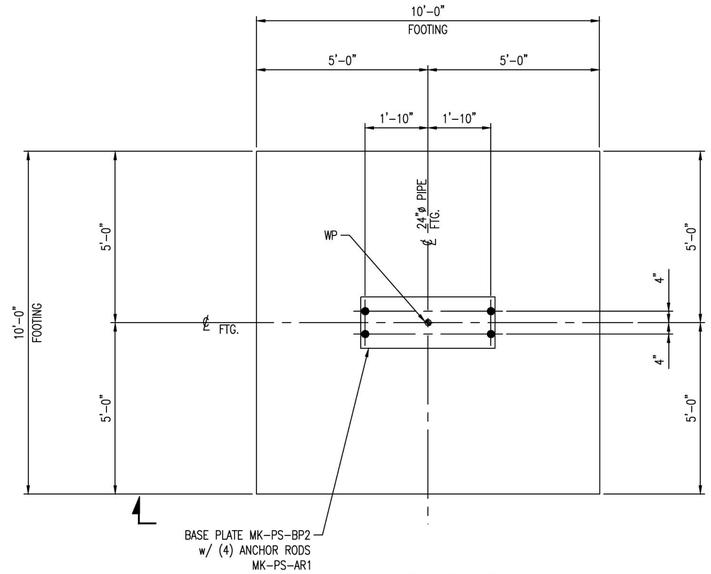

MK-PS-0500-F6
1/2" = 1'-0"
PLAN VIEW

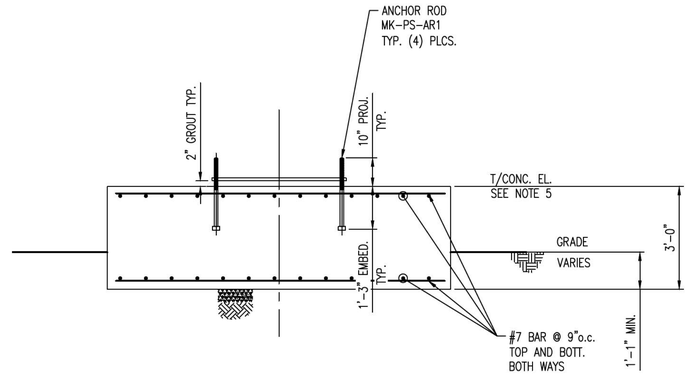

SECTION A
1/2" = 1'-0"

NOTES:

1. FOR CONCRETE GENERAL NOTES SEE DWG 0100-FD-001.
2. BASE PLATE:
   A. SEE DWG 0100-FD-002 FOR DETAILS.
   B. TOLERANCE ON ELEVATION OF TOPS OF EMBEDDED PLATES ARE $\pm\frac{1}{8}$"
   C. BASE PLATES TO BE PROVIDED BY CONCRETE CONTRACTOR
3. ANCHOR ROD, SEE DWG 0100-FD-001 FOR SCHEDULE.
4. ALL REBAR DIMENSIONS ARE TO OUTSIDE OF REBAR U.N.O.
5. SEE FOOTING AND FOUNDATION PLOT PLAN FOR T/CONC. ELEVATIONS.

Footing Schedule Area 0500 Pipe

NO.	DATE	REVISION	BY	CK'D	APP
HH	11/14/14		NLB	–	–

R&M ENGINEERING CONSULTANTS
SALT LAKE CITY, UTAH
(801)263-3419
13014

TESORO SAVAGE

THIS DRAWING CONTAINS PROPRIETARY AND PRIVILEGED INFORMATION OF TESORO SAVAGE PETROLEUM LLC AND SHALL NOT BE DISCLOSED OR USED FOR THE BENEFIT OF OTHERS WITHOUT PRIOR WRITTEN PERMISSION OF THE DRAWING OWNER.

CUSTOMER: TESORO SAVAGE PETROLEUM TERMINAL LLC

PROJECT: TESORO SAVAGE VANCOUVER ENERGY DISTRIBUTION TERMINAL LLC
PORT OF VANCOUVER, WASHINGTON

DESCRIPTION:
AREA 0500 PIPE FOOTING SCHEDULE
MK-PS-0500-F6

DESIGN:	START DATE: 08-04-13	SCALE: NTS	
DRAWN: PDM	PRINT DATE:	PROJECT MANAGER: DC	
CHECKED:	APPROVED:	SIZE: 24x36	
DRAWING NUMBER		SHEET	REV.
0500-FD-024		1/1	HH

EX-0001-007632-PCE

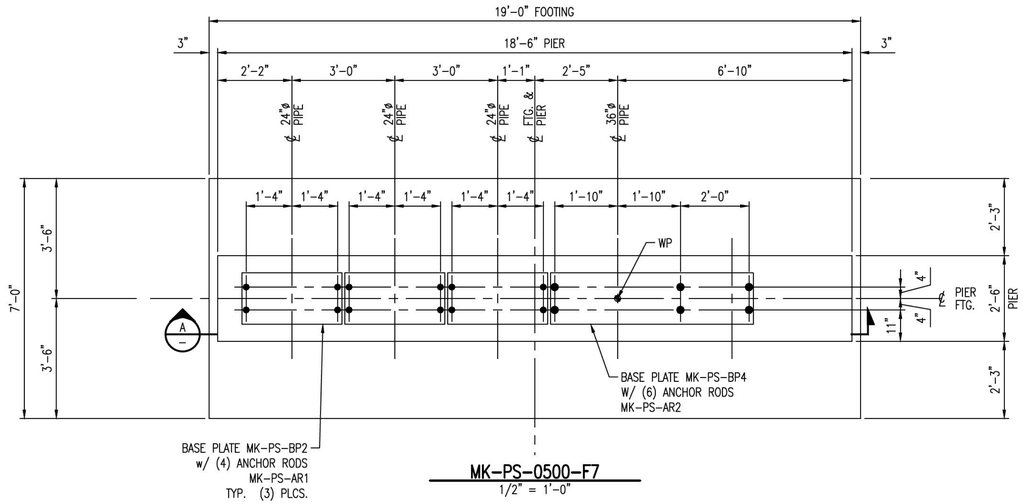

MK-PS-0500-F7
1/2" = 1'-0"

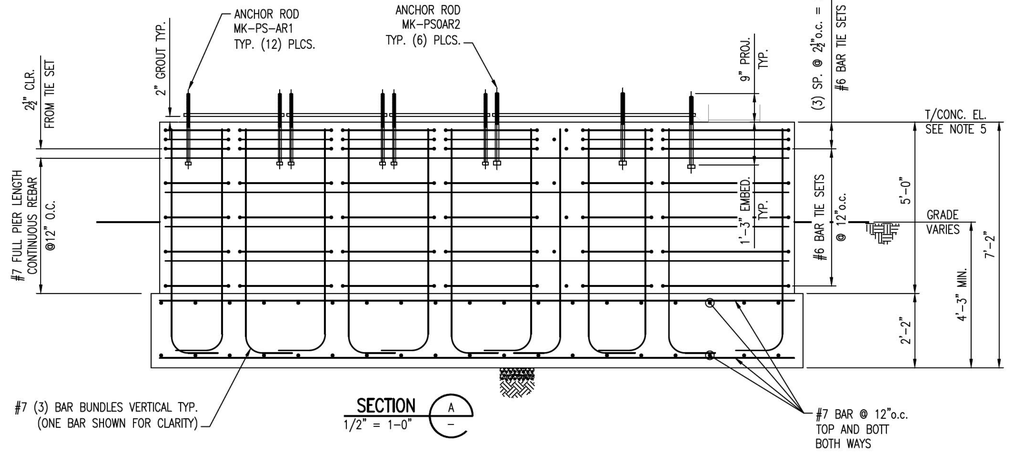

SECTION A
1/2" = 1-0"

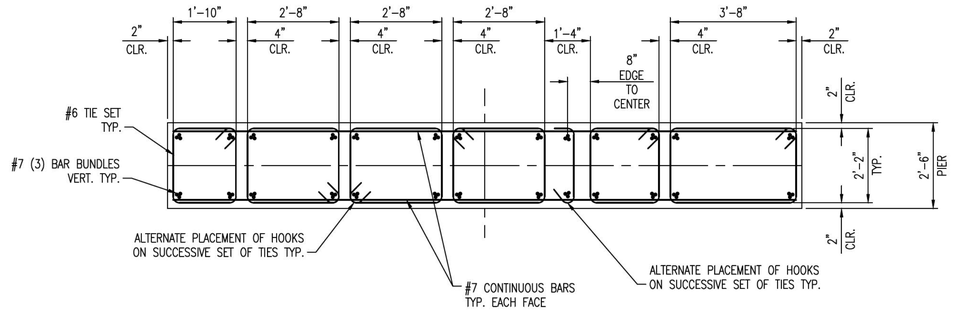

PIER REINFORCEMENT
1/2" = 1'-0"

PRELIMINARY
NOT FOR CONSTRUCTION

NOTES:

1. FOR CONCRETE GENERAL NOTES SEE DWG 0100-FD-001.
2. BASE PLATE:
   A. SEE DWG 0100-FD-002 FOR DETAILS.
   B. TOLERANCE ON ELEVATION OF TOPS OF EMBEDDED PLATES ARE ±⅛"
   C. BASE PLATES TO BE PROVIDED BY CONCRETE CONTRACTOR
3. ANCHOR ROD, SEE DWG 0100-FD-001 FOR SCHEDULE.
4. ALL REBAR DIMENSIONS ARE TO OUTSIDE OF REBAR U.N.O.
5. SEE FOOTING AND FOUNDATION PLOT PLAN FOR T/CONC. ELEVATIONS.

NO.	DATE	REVISION	BY	CK'D	APP
HH	11/14/14		NLB	–	–

Footing Schedule Area 0500 Pipe

R&M ENGINEERING CONSULTANTS
SALT LAKE CITY, UTAH
(801)263-3419

13014

TESORO SAVAGE

THIS DRAWING CONTAINS PROPRIETARY AND PRIVILEGED INFORMATION OF TESORO SAVAGE PETROLEUM LLC AND SHALL NOT BE DISCLOSED OR USED FOR THE BENEFIT OF OTHERS WITHOUT PRIOR WRITTEN PERMISSION OF THE DRAWING OWNER.

CUSTOMER: TESORO SAVAGE PETROLEUM TERMINAL LLC

PROJECT: TESORO SAVAGE VANCOUVER ENERGY DISTRIBUTION TERMINAL LLC
PORT OF VANCOUVER, WASHINGTON

DESCRIPTION:
AREA 0500 PIPE FOOTING SCHEDULE
MK-PS-0500-F7

DESIGN:	START DATE: 08-04-13	SCALE:	1/2" = 1'-0"
DRAWN: PDM	PRINT DATE:	PROJECT MANAGER:	DC
CHECKED:	APPROVED:	SIZE:	24x36
DRAWING NUMBER		SHEET	REV.
0500-FD-025		1/1	HH

EX-0001-007633-PCE

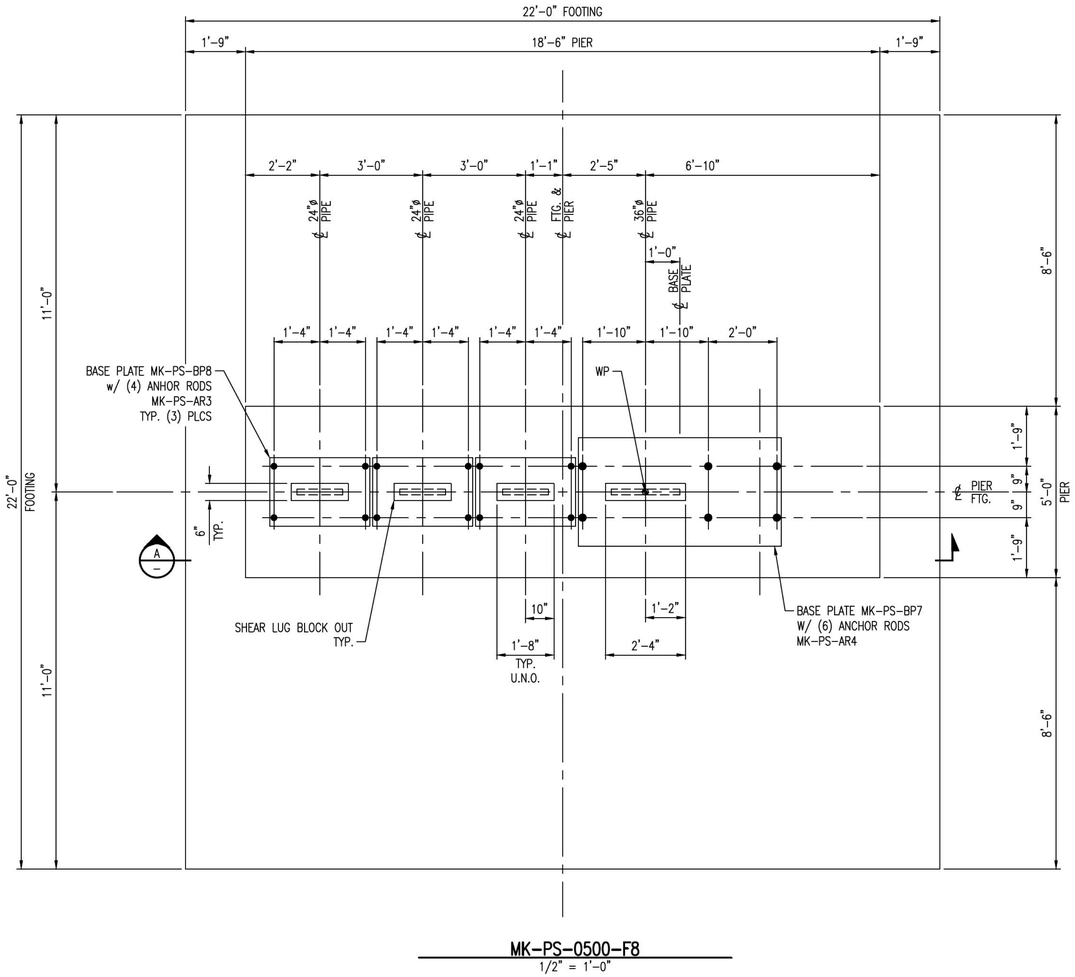

MK-PS-0500-F8
1/2" = 1'-0"

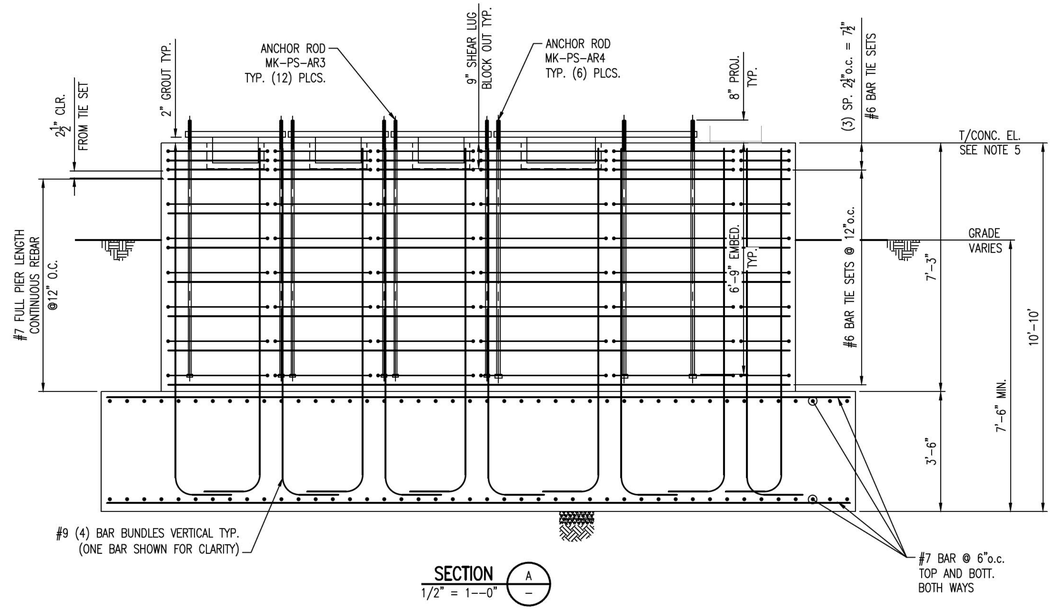

SECTION A
1/2" = 1'-0"

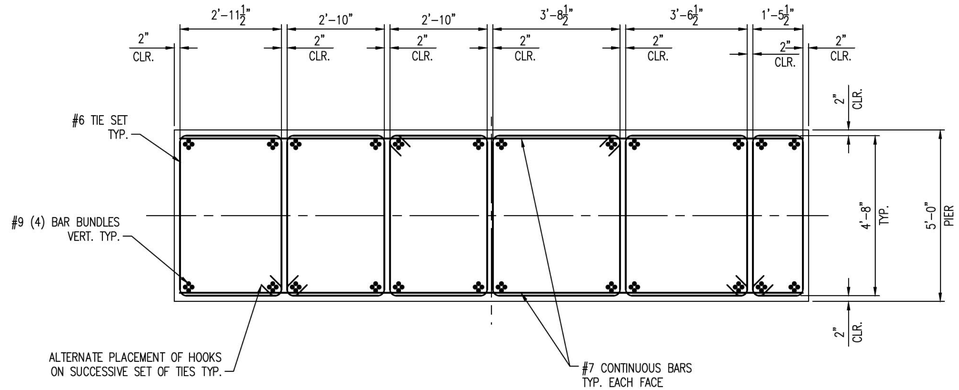

PIER REINFORCEMENT
1/2" = 1'-0"

NOTES:

1. FOR CONCRETE GENERAL NOTES SEE DWG 0100-FD-001.
2. BASE PLATE:
   A. SEE DWG 0100-FD-002 FOR DETAILS.
   B. TOLERANCE ON ELEVATION OF TOPS OF EMBEDDED PLATES ARE ±⅛"
   C. BASE PLATES TO BE PROVIDED BY CONCRETE CONTRACTOR
3. ANCHOR ROD, SEE DWG 0100-FD-001 FOR SCHEDULE.
4. ALL REBAR DIMENSIONS ARE TO OUTSIDE OF REBAR U.N.O.
5. SEE FOOTING AND FOUNDATION PLOT PLAN FOR T/CONC. ELEVATIONS.

PRELIMINARY
NOT FOR CONSTRUCTION

NO.	DATE	REVISION	BY	CK'D	APP
HH	11/14/14		NLB	–	–

R&M ENGINEERING CONSULTANTS
SALT LAKE CITY, UTAH
(801)263-3419
13014

TESORO SAVAGE

THIS DRAWING CONTAINS PROPRIETARY AND PRIVILEGED INFORMATION OF TESORO SAVAGE PETROLEUM LLC AND SHALL NOT BE DISCLOSED OR USED FOR THE BENEFIT OF OTHERS WITHOUT PRIOR WRITTEN PERMISSION OF THE DRAWING OWNER.

CUSTOMER: TESORO SAVAGE PETROLEUM TERMINAL LLC

PROJECT: TESORO SAVAGE VANCOUVER ENERGY DISTRIBUTION TERMINAL LLC
PORT OF VANCOUVER, WASHINGTON

DESCRIPTION:
AREA 0500 PIPE FOOTING SCHEDULE
MK-PS-0500-F8

DESIGN:		START DATE: 08-04-13	SCALE: NTS
DRAWN: PDM		PRINT DATE:	PROJECT MANAGER: DC
CHECKED:		APPROVED:	SIZE: 24x36
DRAWING NUMBER			SHEET 1/1 REV. HH
0500-FD-026			

Footing Schedule Area 0500 Pipe

EX-0001-007634-PCE

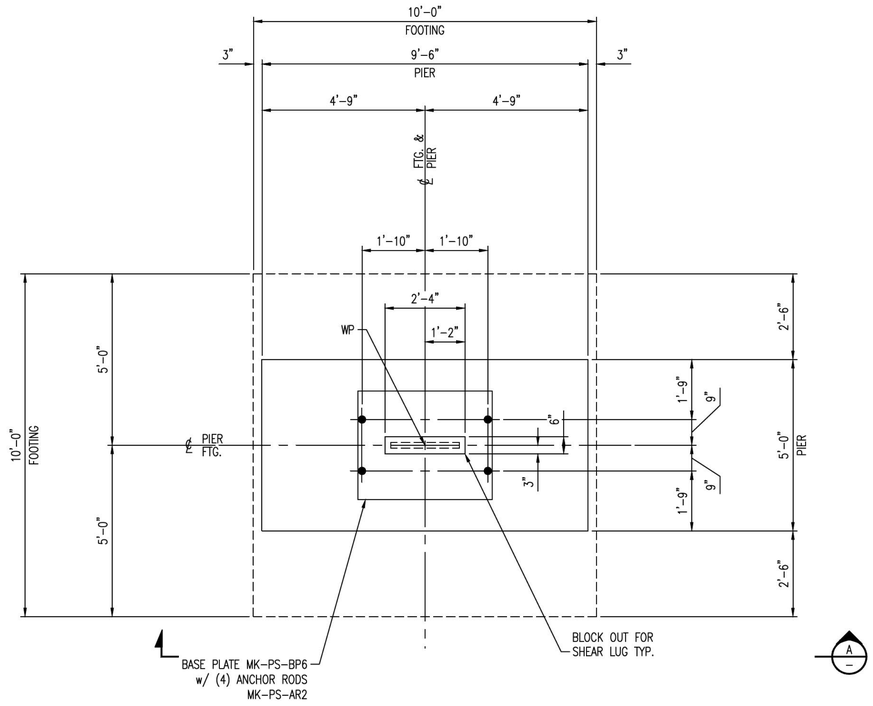

MK-PS-0500-F9
1/2" = 1'-0"
PLAN VIEW

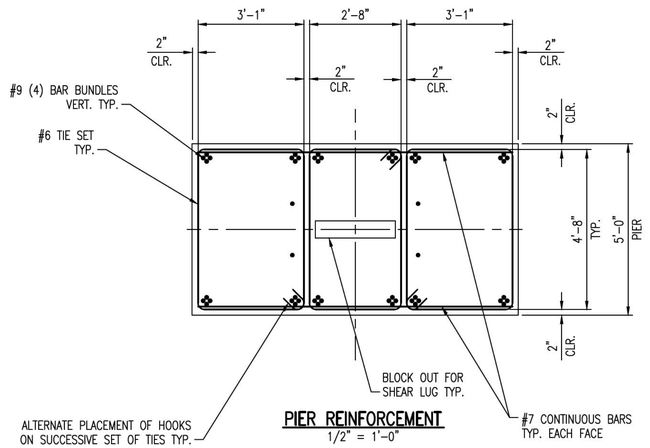

PIER REINFORCEMENT
1/2" = 1'-0"

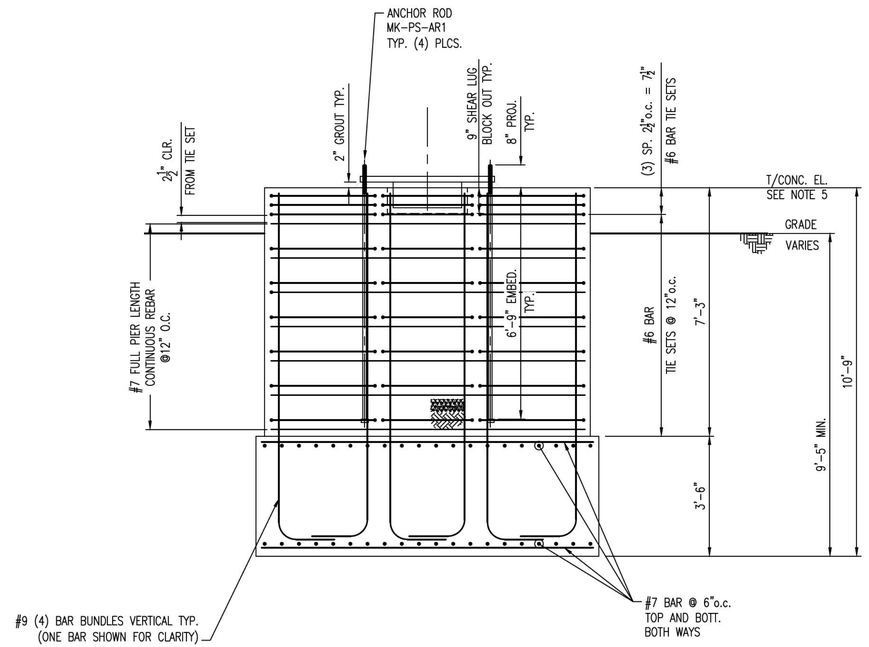

SECTION
1/2" = 1'-0"

NOTES:
1. FOR CONCRETE GENERAL NOTES SEE DWG 0100-FD-001.
2. BASE PLATE:
   A. SEE DWG 0100-FD-002 FOR DETAILS.
   B. TOLERANCE ON ELEVATION OF TOPS OF EMBEDDED PLATES ARE ±⅛"
   C. BASE PLATES TO BE PROVIDED BY CONCRETE CONTRACTOR
3. ANCHOR ROD, SEE DWG 0100-FD-001 FOR SCHEDULE.
4. ALL REBAR DIMENSIONS ARE TO OUTSIDE OF REBAR U.N.O.
5. SEE FOOTING AND FOUNDATION PLOT PLAN FOR T/CONC. ELEVATIONS.

Footing Schedule Area 0500 Pipe

NO.	DATE	REVISION	BY	CK'D	APP
HH	11/14/14		NLB	–	–

R&M ENGINEERING CONSULTANTS
SALT LAKE CITY, UTAH
(801)263-3419

13014

TESORO SAVAGE

THIS DRAWING CONTAINS PROPRIETARY AND PRIVILEGED INFORMATION OF TESORO SAVAGE PETROLEUM LLC AND SHALL NOT BE DISCLOSED OR USED FOR THE BENEFIT OF OTHERS WITHOUT PRIOR WRITTEN PERMISSION OF THE DRAWING OWNER.

CUSTOMER: TESORO SAVAGE PETROLEUM TERMINAL LLC

PROJECT: TESORO SAVAGE VANCOUVER ENERGY DISTRIBUTION TERMINAL LLC
PORT OF VANCOUVER, WASHINGTON

DESCRIPTION:
AREA 0500 PIPE FOOTING SCHEDULE
MK-PS-0500-F9

DESIGN:	START DATE: 08-04-13	SCALE:	NTS
DRAWN: PDM	PRINT DATE:	PROJECT MANAGER:	DC
CHECKED:	APPROVED:	SIZE:	24x36

DRAWING NUMBER	SHEET	REV.
0500-FD-027	1/1	HH

EX-0001-007635-PCE

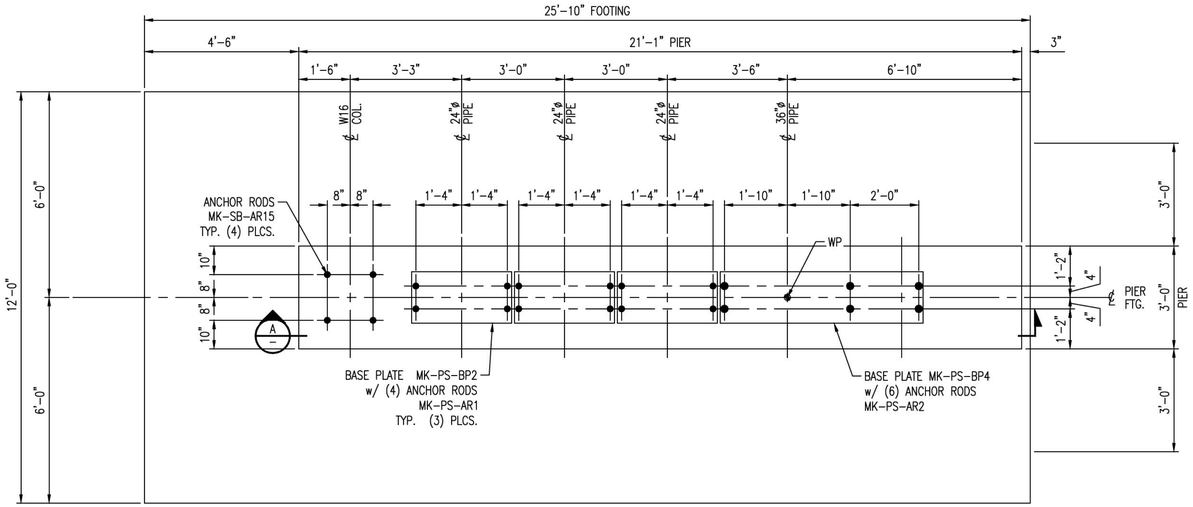

MK-PS-0500-F10
1/2" = 1'-0"

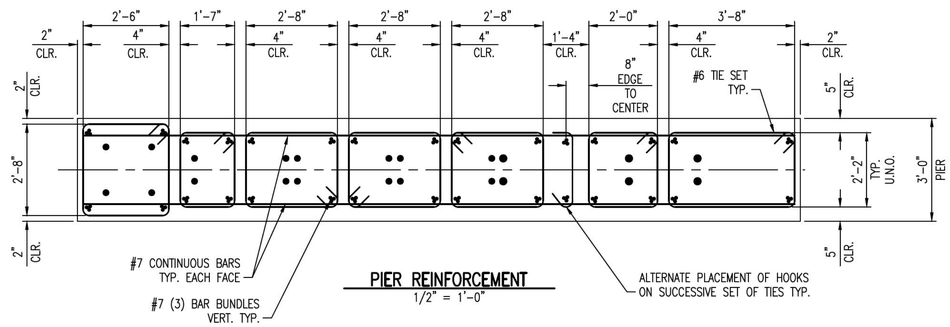

PIER REINFORCEMENT
1/2" = 1'-0"

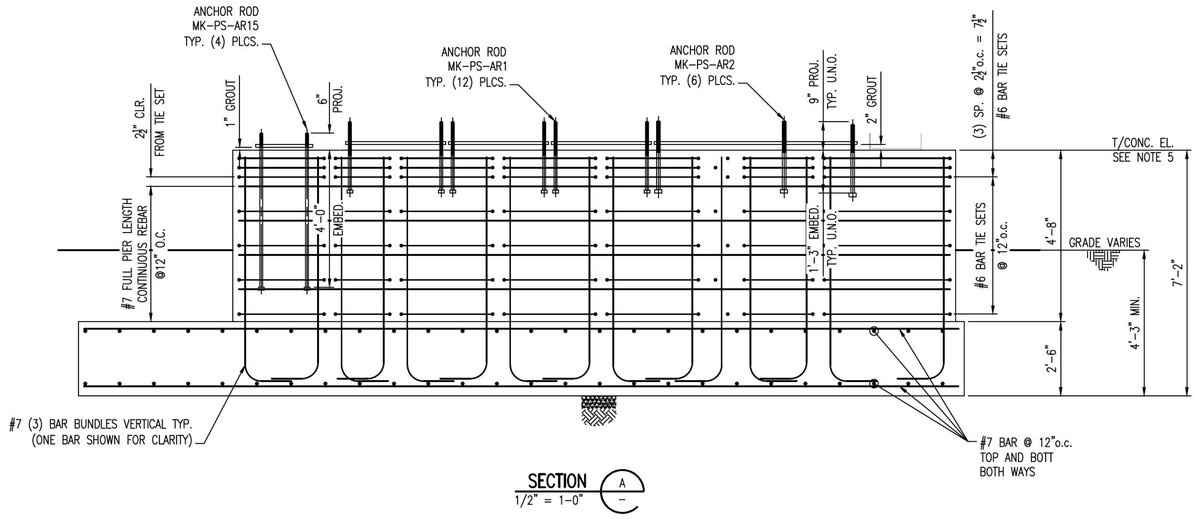

SECTION A–A
1/2" = 1'-0"

PRELIMINARY
NOT FOR CONSTRUCTION

NOTES:

1. FOR CONCRETE GENERAL NOTES SEE DWG 0100-FD-001.
2. BASE PLATE:
   A. SEE DWG 0100-FD-002 FOR DETAILS.
   B. TOLERANCE ON ELEVATION OF TOPS OF EMBEDDED PLATES ARE ±⅛"
   C. BASE PLATES TO BE PROVIDED BY CONCRETE CONTRACTOR
3. ANCHOR ROD, SEE DWG 0100-FD-001 FOR SCHEDULE.
4. ALL REBAR DIMENSIONS ARE TO OUTSIDE OF REBAR U.N.O.
5. SEE FOOTING AND FOUNDATION PLOT PLAN FOR T/CONC. ELEVATIONS.

Footing Schedule Area 0500 Pipe

NO.	DATE	REVISION	BY	CK'D	APP
HH	11/14/14		NLB	–	–

R&M ENGINEERING CONSULTANTS
SALT LAKE CITY, UTAH
(801)263-3419
13014

TESORO SAVAGE™

THIS DRAWING CONTAINS PROPRIETARY AND PRIVILEGED INFORMATION OF TESORO SAVAGE PETROLEUM LLC AND SHALL NOT BE DISCLOSED OR USED FOR THE BENEFIT OF OTHERS WITHOUT PRIOR WRITTEN PERMISSION OF THE DRAWING OWNER.

CUSTOMER: TESORO SAVAGE PETROLEUM TERMINAL LLC

PROJECT: TESORO SAVAGE VANCOUVER ENERGY DISTRIBUTION TERMINAL LLC
PORT OF VANCOUVER, WASHINGTON

DESCRIPTION: AREA 0500 PIPE FOOTING SCHEDULE
MK-PS-0500-F10

DESIGN:	START DATE: 08-04-13	SCALE:	NTS
DRAWN: PDM	PRINT DATE:	PROJECT MANAGER:	DC
CHECKED:	APPROVED:	SIZE:	24x36
DRAWING NUMBER		SHEET	REV.
0500-FD-028		1/1	HH

EX-0001-007636-PCE

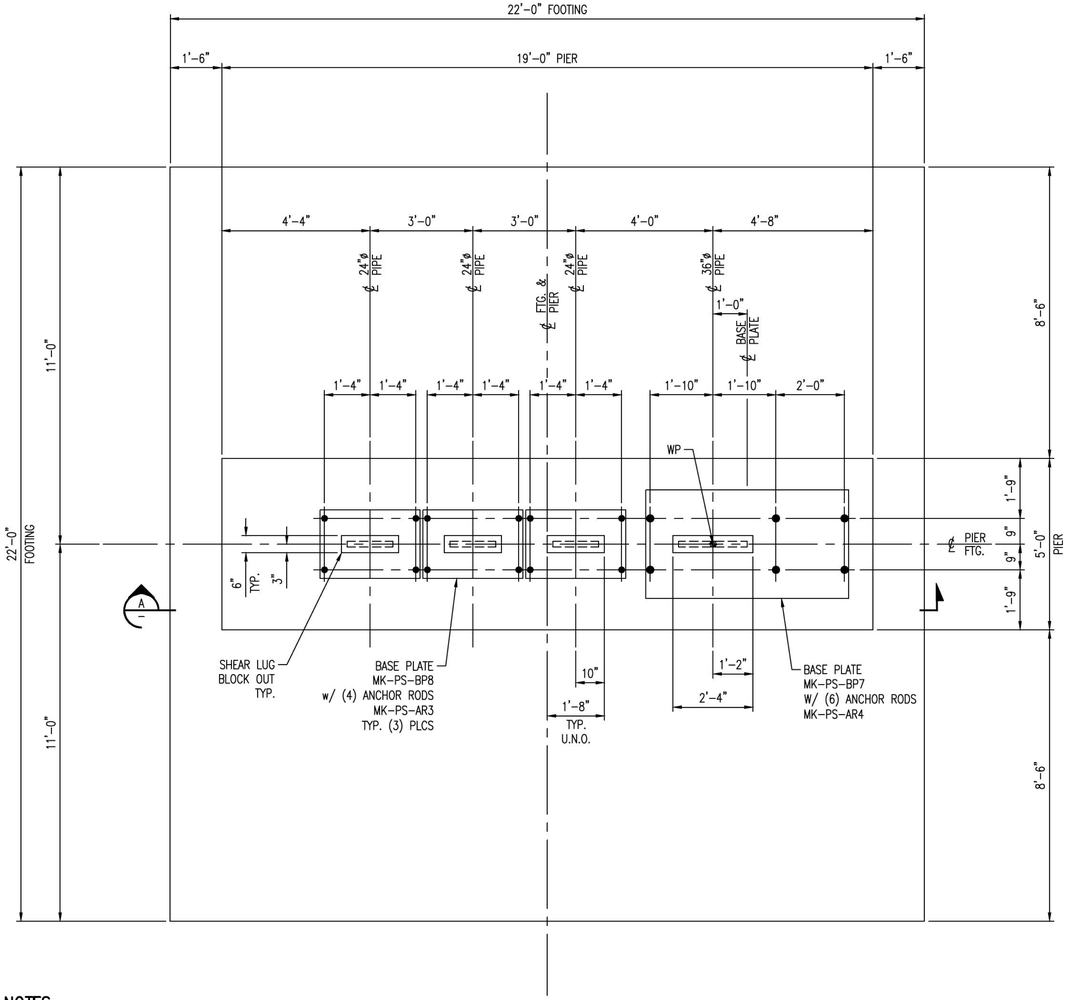

MK-PS-0500-F11
1/2" = 1'-0"

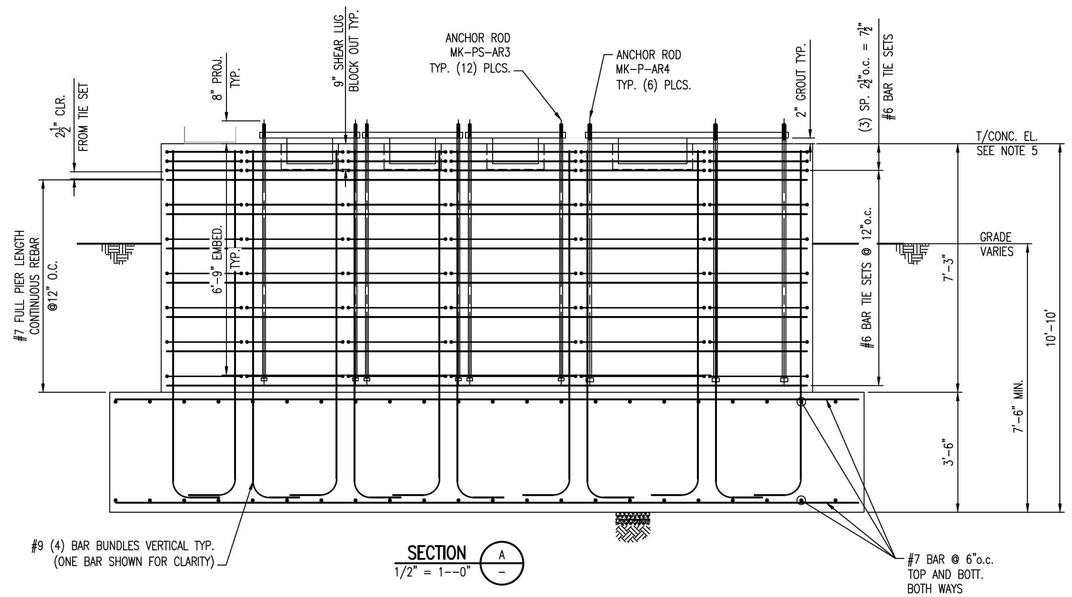

SECTION A
1/2" = 1'-0"

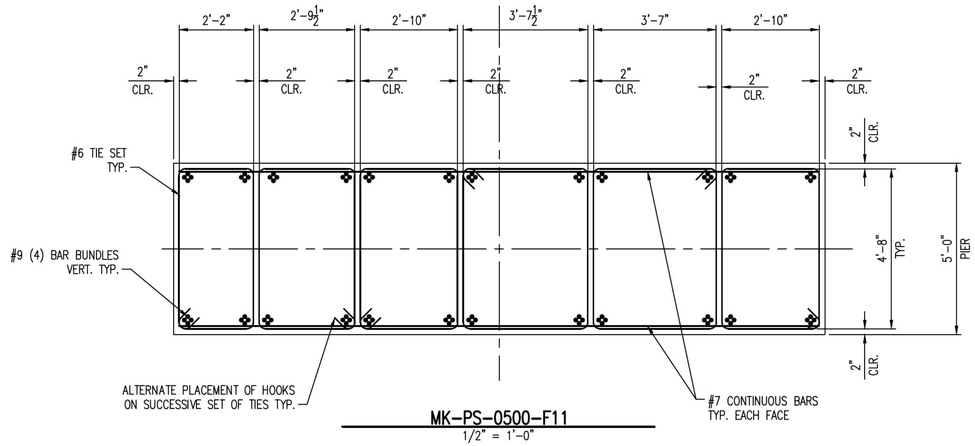

MK-PS-0500-F11
1/2" = 1'-0"

NOTES:

1. FOR CONCRETE GENERAL NOTES SEE DWG 0100-FD-001.
2. BASE PLATE:
   A. SEE DWG 0100-FD-002 FOR DETAILS.
   B. TOLERANCE ON ELEVATION OF TOPS OF EMBEDDED PLATES ARE ±⅛"
   C. BASE PLATES TO BE PROVIDED BY CONCRETE CONTRACTOR
3. ANCHOR ROD, SEE DWG 0100-FD-001 FOR SCHEDULE.
4. ALL REBAR DIMENSIONS ARE TO OUTSIDE OF REBAR U.N.O.
5. SEE FOOTING AND FOUNDATION PLOT PLAN FOR T/CONC. ELEVATIONS.

PRELIMINARY
NOT FOR CONSTRUCTION

NO.	DATE	REVISION	BY	CK'D	APP
HH	11/14/14		NLB	–	–

Footing Schedule Area 0500 Pipe

R&M ENGINEERING CONSULTANTS
SALT LAKE CITY, UTAH
(801)263-3419

13014

TESORO SAVAGE™

THIS DRAWING CONTAINS PROPRIETARY AND PRIVILEGED INFORMATION OF TESORO SAVAGE PETROLEUM LLC AND SHALL NOT BE DISCLOSED OR USED FOR THE BENEFIT OF OTHERS WITHOUT PRIOR WRITTEN PERMISSION OF THE DRAWING OWNER.

CUSTOMER: TESORO SAVAGE PETROLEUM TERMINAL LLC

PROJECT: TESORO SAVAGE VANCOUVER ENERGY DISTRIBUTION TERMINAL LLC
PORT OF VANCOUVER, WASHINGTON

DESCRIPTION:
AREA 0500 PIPE FOOTING SCHEDULE
MK-PS-0500-F11

DESIGN:	START DATE: 08-04-13	SCALE:	1/2" = 1'-0"
DRAWN: PDM	PRINT DATE:	PROJECT MANAGER:	DC
CHECKED:	APPROVED:	SIZE:	24x36
DRAWING NUMBER		SHEET	REV.
0500-FD-029		1/1	HH

EX-0001-007637-PCE

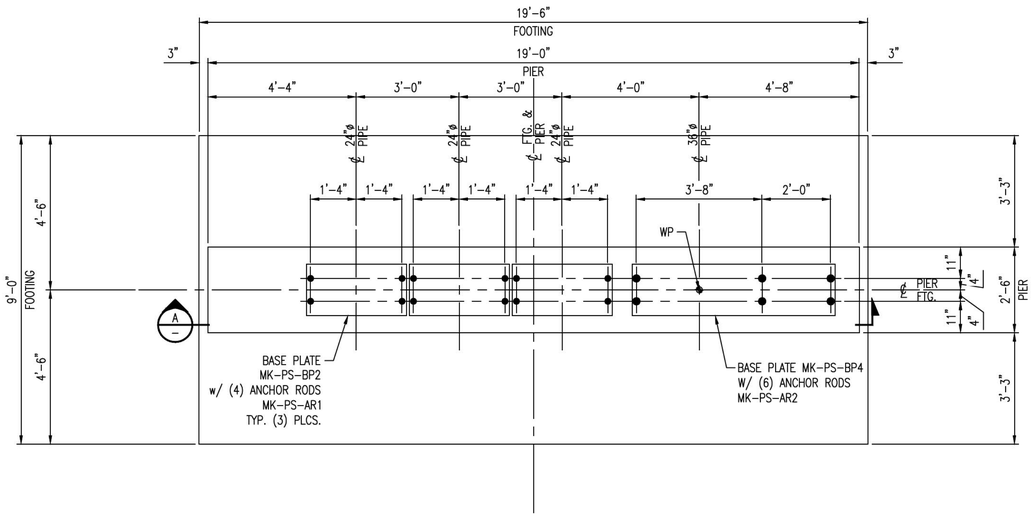

MK-PS-0500-F12
1/2" =1'-0"

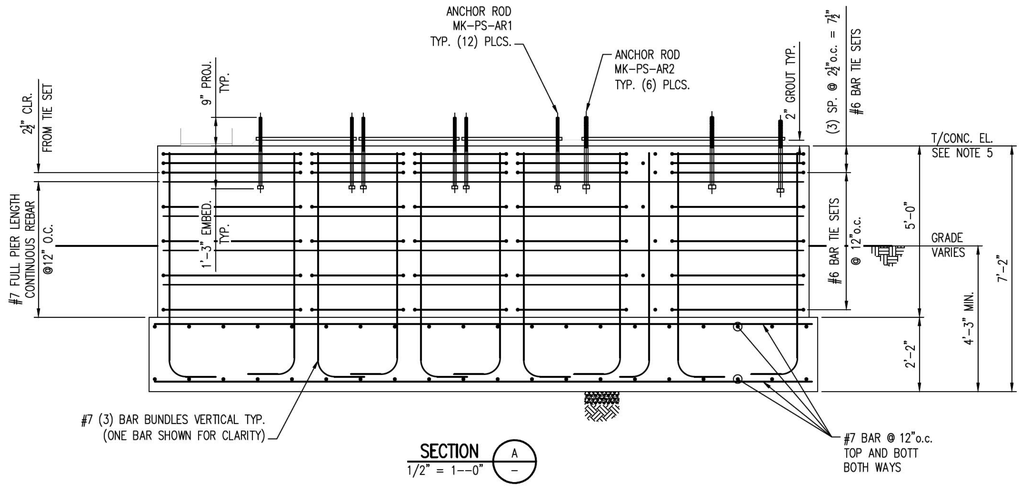

SECTION A
1/2" = 1'-0"

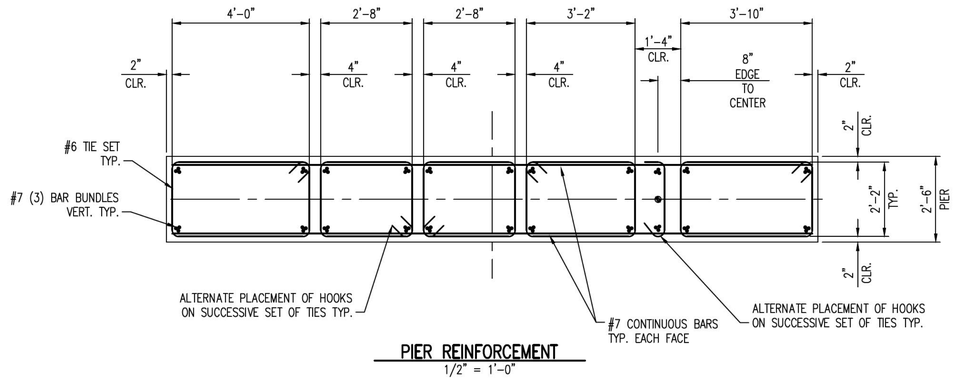

PIER REINFORCEMENT
1/2" = 1'-0"

PRELIMINARY
NOT FOR CONSTRUCTION

NOTES:

1. FOR CONCRETE GENERAL NOTES SEE DWG 0100-FD-001.
2. BASE PLATE:
   A. SEE DWG 0100-FD-002 FOR DETAILS.
   B. TOLERANCE ON ELEVATION OF TOPS OF EMBEDDED PLATES ARE $\pm\frac{1}{8}$"
   C. BASE PLATES TO BE PROVIDED BY CONCRETE CONTRACTOR
3. ANCHOR ROD, SEE DWG 0100-FD-001 FOR SCHEDULE.
4. ALL REBAR DIMENSIONS ARE TO OUTSIDE OF REBAR U.N.O.
5. SEE FOOTING AND FOUNDATION PLOT PLAN FOR T/CONC. ELEVATIONS.

NO.	DATE	REVISION	BY	CK'D	APP
HH	11/14/14		NLB	–	–

R&M ENGINEERING CONSULTANTS
SALT LAKE CITY, UTAH
(801)263-3419
13014

TESORO SAVAGE

THIS DRAWING CONTAINS PROPRIETARY AND PRIVILEGED INFORMATION OF TESORO SAVAGE PETROLEUM LLC AND SHALL NOT BE DISCLOSED OR USED FOR THE BENEFIT OF OTHERS WITHOUT PRIOR WRITTEN PERMISSION OF THE DRAWING OWNER.

CUSTOMER: TESORO SAVAGE PETROLEUM TERMINAL LLC

PROJECT: TESORO SAVAGE VANCOUVER ENERGY DISTRIBUTION TERMINAL LLC
PORT OF VANCOUVER, WASHINGTON

DESCRIPTION: AREA 0500 PIPE FOOTING SCHEDULE
MK-PS-0500-F12

DESIGN:	START DATE: 08-04-13	SCALE:	NTS
DRAWN: PDM	PRINT DATE:	PROJECT MANAGER:	DC
CHECKED:	APPROVED:	SIZE:	24x36
DRAWING NUMBER		SHEET	REV.
0500-FD-030		1/1	HH

Footing Schedule Area 0500 Pipe

EX-0001-007638-PCE

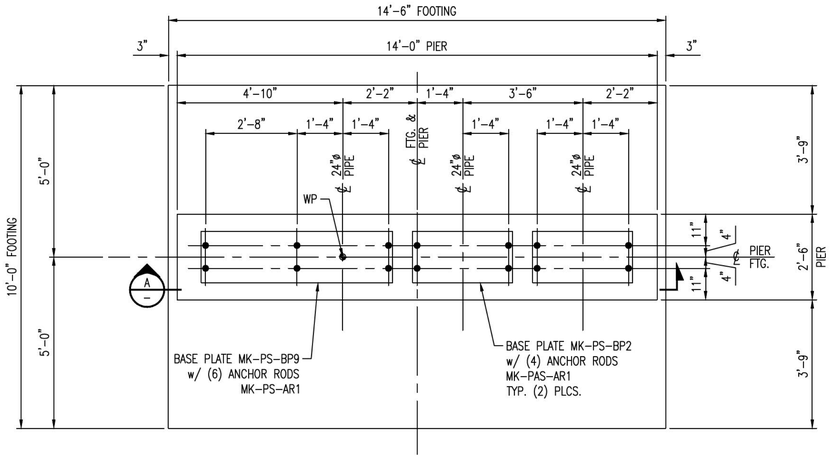

MK-PS-0500-F21

PRELIMINARY
NOT FOR CONSTRUCTION

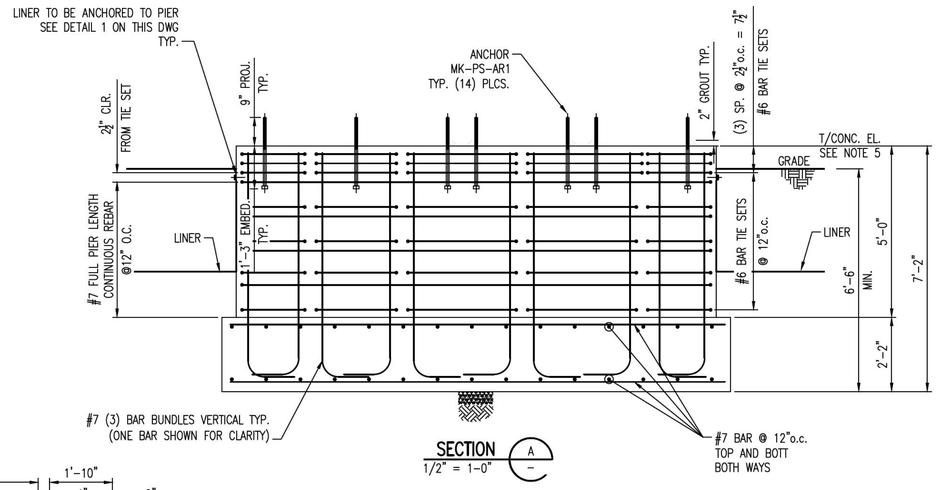

SECTION A
1/2" = 1'-0"

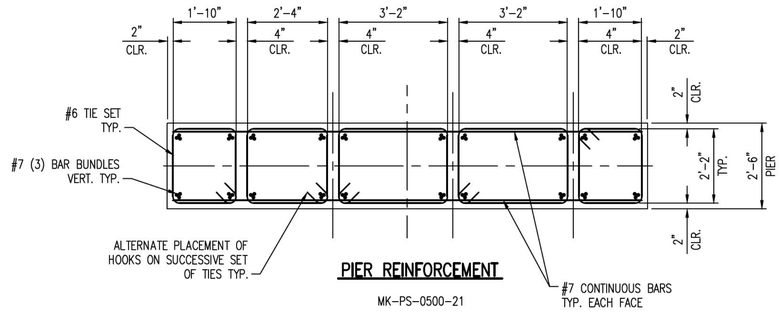

PIER REINFORCEMENT

MK-PS-0500-21

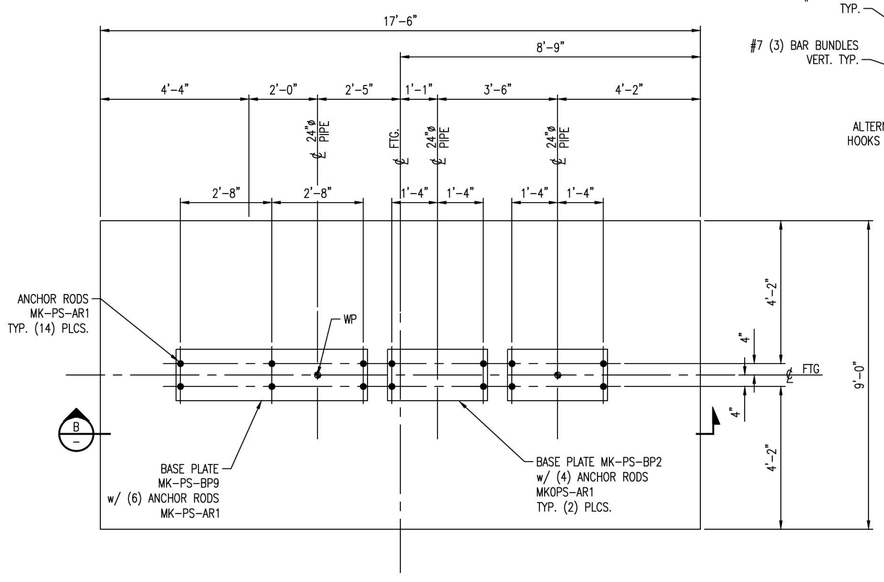

MK-PS-0500-F20

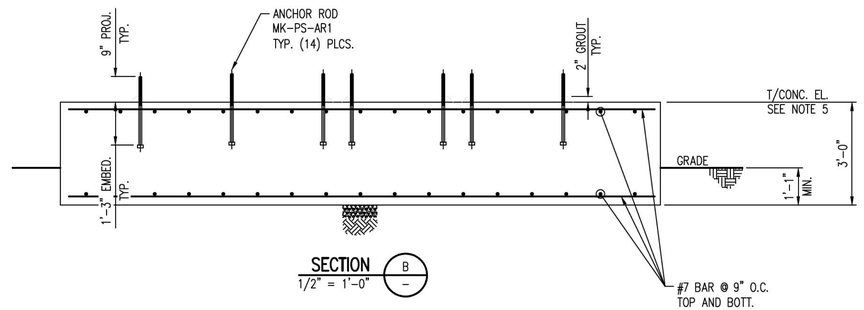

SECTION B
1/2" = 1'-0"

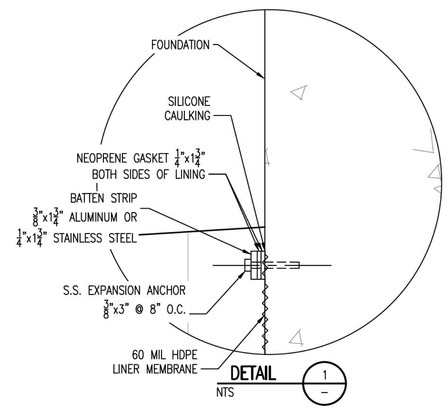

DETAIL 1
NTS

NOTES:

1. FOR CONCRETE GENERAL NOTES SEE DWG 0100-FD-001.
2. BASE PLATE:
   A. SEE DWG 0100-FD-002 FOR DETAILS.
   B. TOLERANCE ON ELEVATION OF TOPS OF EMBEDDED PLATES ARE ±⅛"
   C. BASE PLATES TO BE PROVIDED BY CONCRETE CONTRACTOR
3. ANCHOR ROD, SEE DWG 0100-FD-001 FOR SCHEDULE.
4. ALL REBAR DIMENSIONS ARE TO OUTSIDE OF REBAR U.N.O.
5. SEE FOOTING AND FOUNDATION PLOT PLAN FOR T/CONC. ELEVATIONS.

Footing Schedule Area 0500 Pipe

NO.	DATE	REVISION	BY	CK'D	APP
HH	11/14/14		NLB	–	–

R&M ENGINEERING CONSULTANTS
SALT LAKE CITY, UTAH
(801)263-3419

13014

TESORO SAVAGE

THIS DRAWING CONTAINS PROPRIETARY AND PRIVILEGED INFORMATION OF TESORO SAVAGE PETROLEUM LLC AND SHALL NOT BE DISCLOSED OR USED FOR THE BENEFIT OF OTHERS WITHOUT PRIOR WRITTEN PERMISSION OF THE DRAWING OWNER.

CUSTOMER: TESORO SAVAGE PETROLEUM TERMINAL LLC

PROJECT: TESORO SAVAGE VANCOUVER ENERGY DISTRIBUTION TERMINAL LLC
PORT OF VANCOUVER, WASHINGTON

DESCRIPTION:
AREA 0500 PIPE FOOTING SCHEDULE
MK-PS-0500-F20 & 21

DESIGN:		START DATE:	08-04-13	SCALE:	NTS
DRAWN:	PDM	PRINT DATE:		PROJECT MANAGER:	DC
CHECKED:		APPROVED:		SIZE:	24x36
DRAWING NUMBER				SHEET	REV.
0500-FD-031				1/1	HH

FOOTING SCHEDULE

FTG. MK.	FTG. TYPE	LOCATION OR DWG. NO.	CONCRETE DIMENSIONS									ANCHOR RODS				ELEVATIONS		REINFORCING STEEL							REMARKS	MADE BY	CHK'D BY
			A	B	C	D	E	F	G	H	PIER TYPE	J	K	L	M	N	P	X_1	X_2	X_3	X_4	X_5	X_6	X_7			
MK-0500-PS-F22	B	0500-FD-001	23'-0"	10'-0"	5'-0"	13'-0"	3'-0"	3'-0"		2'-6"	1	1'-3"	1'-3"	6"	MK-PS-AR13	SEE FOOTING AND FOUNDATION PLOT PLANS FOR T/CONCRETE ELEVATIONS		#7 @ 9"O.C.	#7 @ 9"O.C.	#7 @ 9"O.C.	#7 @ 9"O.C.	#6 (4-BAR BUNDLE)	#6 @ 12"O.C.	#6 @ 2½"O.C.	TRANSFER PIPELINE BRIDGE #1	MWD	
MK-0500-PS-F23	C	0500-FD-001	25'-0"	26'-0"	6'-0"	13'-0"	3'-0"	3'-0"	12'-0"	2'-6"	1	1'-3"	1'-3"	6"	MK-PS-AR13			#7 @ 9"O.C.	#7 @ 9"O.C.	#7 @ 9"O.C.	#7 @ 9"O.C.	#6 (4-BAR BUNDLE)	#6 @ 12"O.C.	#6 @ 2½"O.C.	TRANSFER PIPELINE BRIDGE #1	MWD	
MK-0500-PS-F30	A	0500-FD-006	8'-0"	8'-0"			3'-0"	3'-0"		2'-6"	1	1'-3"	1'-3"	5"	MK-PS-AR14			#7 @ 9"O.C.	#7 @ 9"O.C.	#7 @ 9"O.C.	#7 @ 9"O.C.	#6 (4-BAR BUNDLE)	#6 @ 12"O.C.	#6 @ 2½"O.C.	TRANSFER PIPELINE BRIDGE #2	MWD	
MK-0500-PS-F31	A	0500-FD-007	12'-0"	12'-0"			3'-0"	3'-0"		2'-6"	1	1'-4"	1'-4"	5"	MK-PS-AR15			#7 @ 9"O.C.	#7 @ 9"O.C.	#7 @ 9"O.C.	#7 @ 9"O.C.	#6 (4-BAR BUNDLE)	#6 @ 12"O.C.	#6 @ 2½"O.C.	TRANSFER PIPELINE BRIDGE #3	MWD	
MK-0500-PS-F33	B	0500-FD-008	18'-0"	8'-0"	3'-0"	12'-0"	3'-0"	3'-0"		2'-6"	1	1'-3"	1'-3"	6"	MK-PS-AR18			#7 @ 12"O.C.	#7 @ 12"O.C.	#7 @ 12"O.C.	#7 @ 12"O.C.	#7 (4-BAR BUNDLE)	#6 @ 12"O.C.	#6 @ 2½"O.C.	EXPANSION LOOP	NMJ	
MK-0500-PS-F34	D	0500-FD-006	SEE FOOTING TYPE D							2'-6"	1	1'-3"	1'-3"	'5"	MK-PS-AR14			#7 @ 9"O.C.	#7 @ 9"O.C.	#7 @ 9"O.C.	#7 @ 9"O.C.	#6 (4-BAR BUNDLE)	#6 @ 12"O.C.	#6 @ 2½"O.C.	TRANSFER PIPELINE BRIDGE #2	MWD	

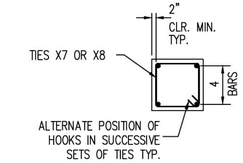

PIER TYPE 1

NOTES:

1. FOR CONCRETE GENERAL NOTES SEE DWG 0100-FD-001.
2. TOLERANCE ON ELEVATION OF TOPS OF EMBEDDED PLATES ARE $\pm\frac{1}{8}$"
3. FOR ANCHOR ROD SCHEDULE SEE DWG 0100-FD-001.
4. ALL DOWELS TO HAVE STD. 90° HOOKS IN FTG PER ACI 318 LATEST EDITION.
5. ALL CLEARANCES 2" MIN. U.N.O.
6. FOR KEYWAY SEE GENERAL CONC. NOTE #8 ON DWG 0100-FD-001.

PRELIMINARY
NOT FOR CONSTRUCTION

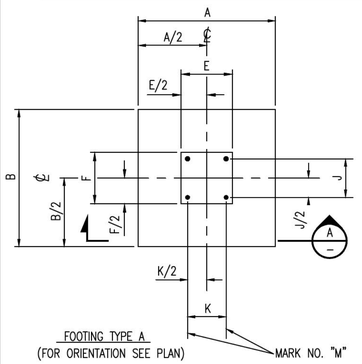

FOOTING TYPE A
(FOR ORIENTATION SEE PLAN)

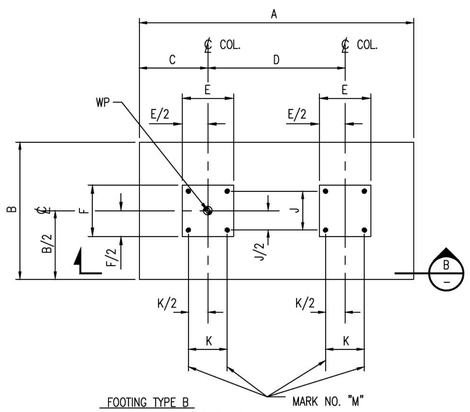

FOOTING TYPE B
(FOR ORIENTATION SEE PLAN)

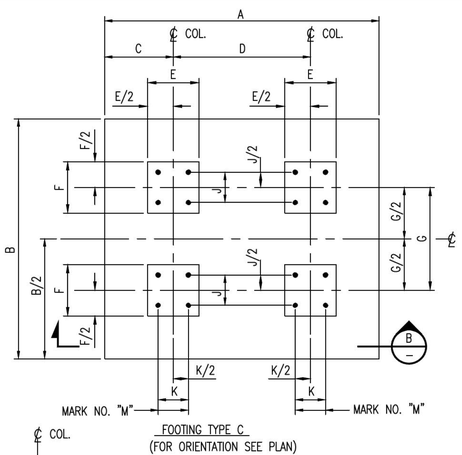

FOOTING TYPE C
(FOR ORIENTATION SEE PLAN)

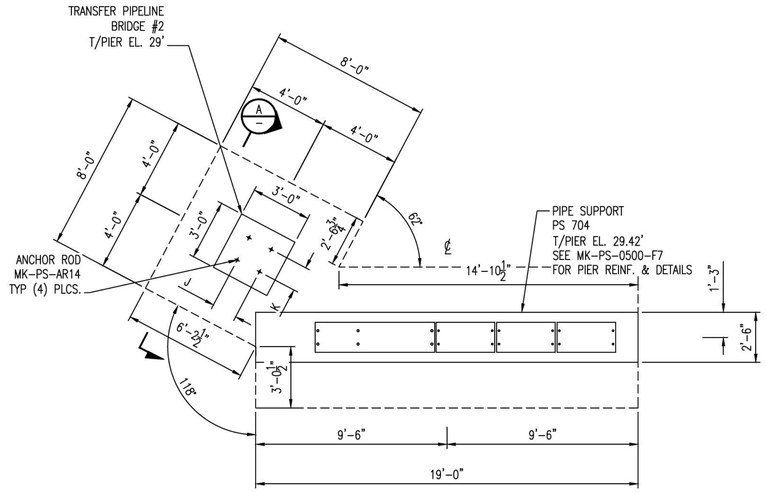

FOOTING TYPE D
(FOR ORIENTATION SEE PLAN)

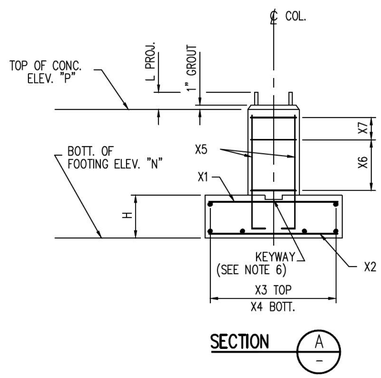

SECTION A

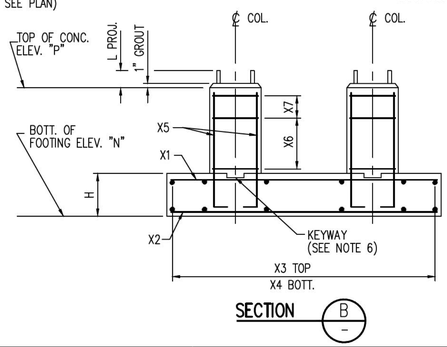

SECTION B

NO.	DATE	REVISION	BY	CK'D	APP
HH	11/14/14		NLB	–	–

R&M ENGINEERING CONSULTANTS
SALT LAKE CITY, UTAH
(801)263-3419
13014

TESORO SAVAGE

THIS DRAWING CONTAINS PROPRIETARY AND PRIVILEGED INFORMATION OF TESORO SAVAGE PETROLEUM LLC AND SHALL NOT BE DISCLOSED OR USED FOR THE BENEFIT OF OTHERS WITHOUT PRIOR WRITTEN PERMISSION OF THE DRAWING OWNER.

CUSTOMER: TESORO SAVAGE PETROLEUM TERMINAL LLC

PROJECT: TESORO SAVAGE VANCOUVER ENERGY DISTRIBUTION TERMINAL LLC
PORT OF VANCOUVER, WASHINGTON

DESCRIPTION: AREA 0500 PIPE BRIDGE FOOTING SCHEDULE DETAILS, SECTION VIEWS & TABLE

DESIGN:	MWD	START DATE:	10-20-14	SCALE:	NTS
DRAWN:	MWD	PRINT DATE:		PROJECT MANAGER:	DC
CHECKED:	–	APPROVED:		SIZE:	24x36

DRAWING NUMBER	SHEET	REV.
0500-FD-032	1/1	HH

Footing Schedule Area 0500 Pipe

EX-0001-007640-PCE

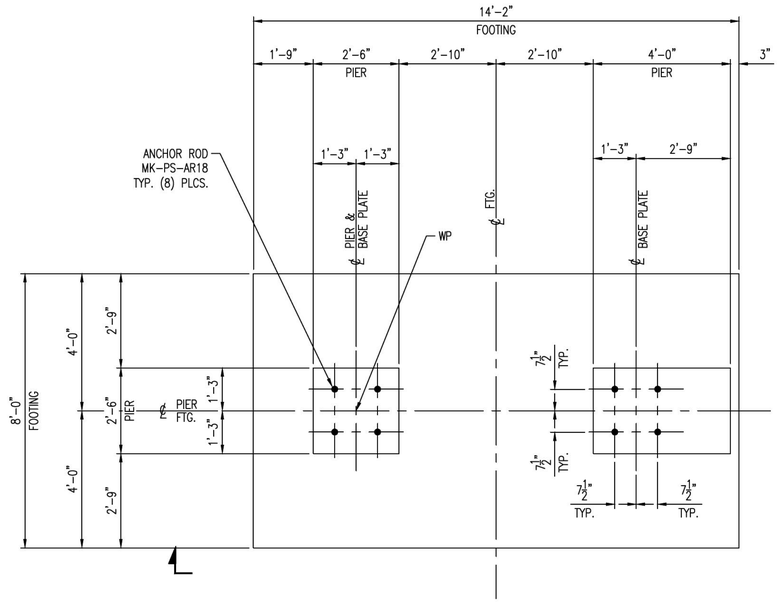

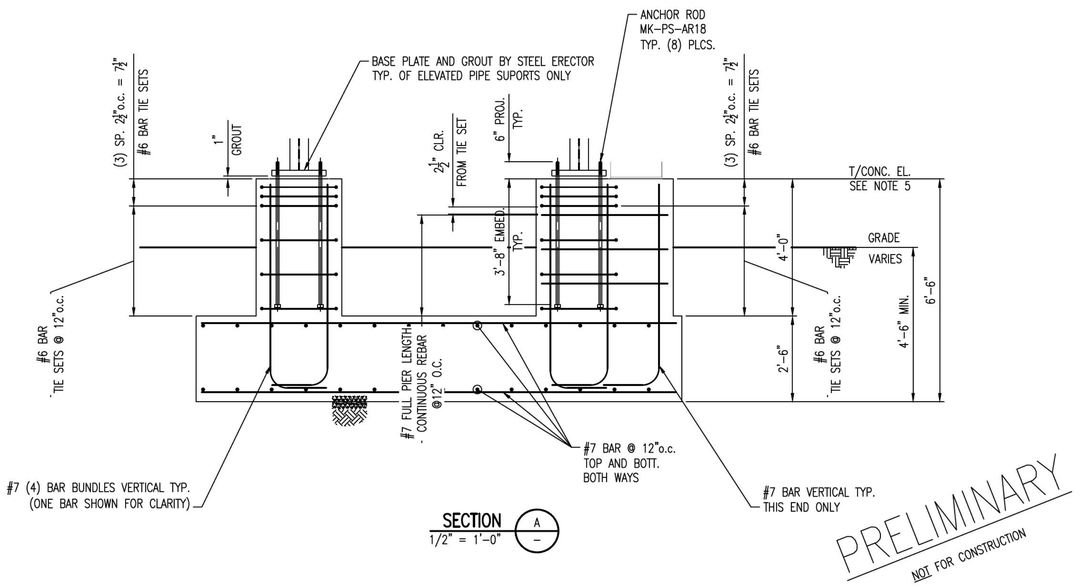

SECTION
1/2" = 1'-0"

PRELIMINARY
NOT FOR CONSTRUCTION

MK-PS-0500-F24
1/2" = 1'-0"
PLAN VIEW

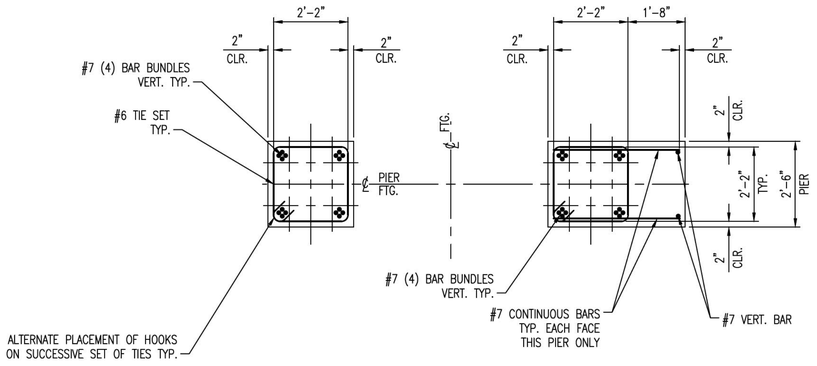

PIER REINFORCEMENT
1/2" = 1'-0"

NOTES:
1. FOR CONCRETE GENERAL NOTES SEE DWG 0100-FD-001.
2. BASE PLATE:
   A. SEE DWG 0100-FD-002 FOR DETAILS.
   B. TOLERANCE ON ELEVATION OF TOPS OF EMBEDDED PLATES ARE ±⅛"
   C. BASE PLATES TO BE PROVIDED BY CONCRETE CONTRACTOR
3. ANCHOR ROD, SEE DWG 0100-FD-001 FOR SCHEDULE.
4. ALL REBAR DIMENSIONS ARE TO OUTSIDE OF REBAR U.N.O.
5. SEE FOOTING AND FOUNDATION PLOT PLAN FOR T/CONC. ELEVATIONS.

Footing Schedule Area 0500 Pipe

NO.	DATE	REVISION	BY	CK'D	APP
HH	11/14/14		NLB	–	–

R&M ENGINEERING CONSULTANTS
SALT LAKE CITY, UTAH
(801)263-3419
13014

TESORO SAVAGE

THIS DRAWING CONTAINS PROPRIETARY AND PRIVILEGED INFORMATION OF TESORO SAVAGE PETROLEUM LLC AND SHALL NOT BE DISCLOSED OR USED FOR THE BENEFIT OF OTHERS WITHOUT PRIOR WRITTEN PERMISSION OF THE DRAWING OWNER.

CUSTOMER: TESORO SAVAGE PETROLEUM TERMINAL LLC

PROJECT: TESORO SAVAGE VANCOUVER ENERGY DISTRIBUTION TERMINAL LLC
PORT OF VANCOUVER, WASHINGTON

DESCRIPTION: AREA 0500 PIPE EXPANSION LOOP FOOTING SCHEDULE
MK-PS-0500-F24

DESIGN:	MWD	START DATE:	10-20-14	SCALE:	NTS		
DRAWN:	MWD	PRINT DATE:		PROJECT MANAGER:	DC		
CHECKED:	–	APPROVED:		SIZE:	24x36		
DRAWING NUMBER				SHEET	REV.		
0500-FD-033				1/1	HH		

EX-0001-007641-PCE

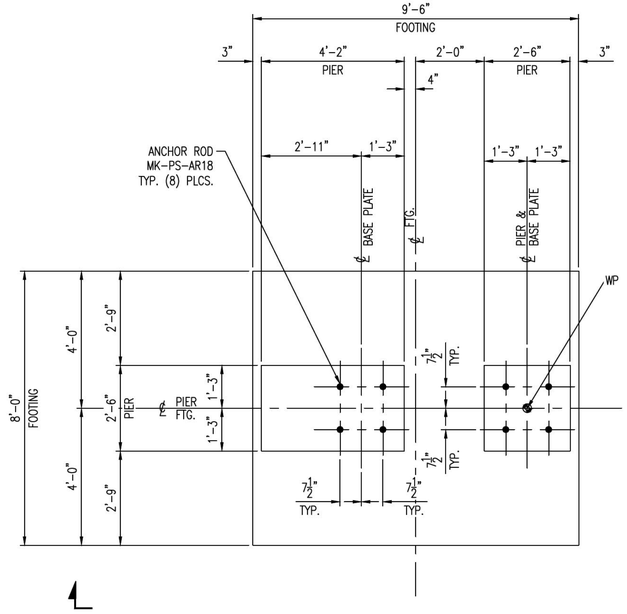

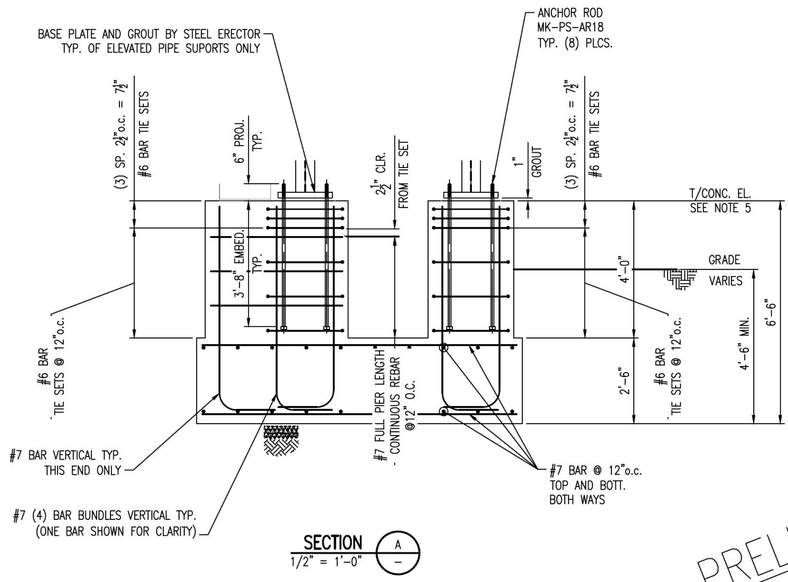

SECTION
1/2" = 1'-0"
A

PRELIMINARY
NOT FOR CONSTRUCTION

MK-PS-0500-F25
1/2" = 1'-0"
PLAN VIEW

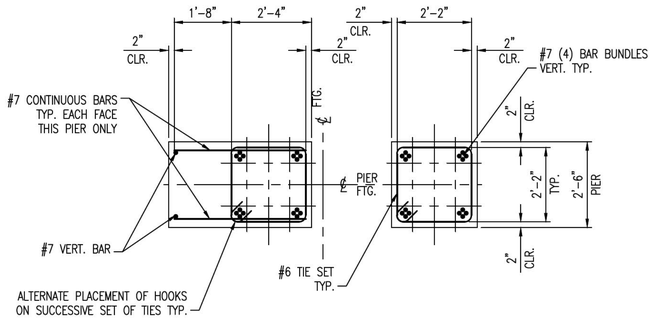

PIER REINFORCEMENT
1/2" = 1'-0"

NOTES:
1. FOR CONCRETE GENERAL NOTES SEE DWG 0100-FD-001.
2. BASE PLATE:
   A. SEE DWG 0100-FD-002 FOR DETAILS.
   B. TOLERANCE ON ELEVATION OF TOPS OF EMBEDDED PLATES ARE ±⅛"
   C. BASE PLATES TO BE PROVIDED BY CONCRETE CONTRACTOR
3. ANCHOR ROD, SEE DWG 0100-FD-001 FOR SCHEDULE.
4. ALL REBAR DIMENSIONS ARE TO OUTSIDE OF REBAR U.N.O.
5. SEE FOOTING AND FOUNDATION PLOT PLAN FOR T/CONC. ELEVATIONS.

Footing Schedule Area 0500 Pipe

NO.	DATE	REVISION	BY	CK'D	APP
HH	11/14/14		NLB	–	–

R&M ENGINEERING CONSULTANTS
SALT LAKE CITY, UTAH
(801)263-3419
13014

TESORO SAVAGE

THIS DRAWING CONTAINS PROPRIETARY AND PRIVILEGED INFORMATION OF TESORO SAVAGE PETROLEUM LLC AND SHALL NOT BE DISCLOSED OR USED FOR THE BENEFIT OF OTHERS WITHOUT PRIOR WRITTEN PERMISSION OF THE DRAWING OWNER.

CUSTOMER: TESORO SAVAGE PETROLEUM TERMINAL LLC

PROJECT: TESORO SAVAGE VANCOUVER ENERGY DISTRIBUTION TERMINAL LLC
PORT OF VANCOUVER, WASHINGTON

DESCRIPTION: AREA 0500 PIPE EXPANSION LOOP FOOTING SCHEDULE
MK-PS-0500-F25

DESIGN:	MWD	START DATE:	10-20-14	SCALE:	NTS
DRAWN:	MWD	PRINT DATE:		PROJECT MANAGER:	DC
CHECKED:	–	APPROVED:		SIZE:	24x36

DRAWING NUMBER	SHEET	REV.
0500-FD-034	1/1	HH

EX-0001-007642-PCE

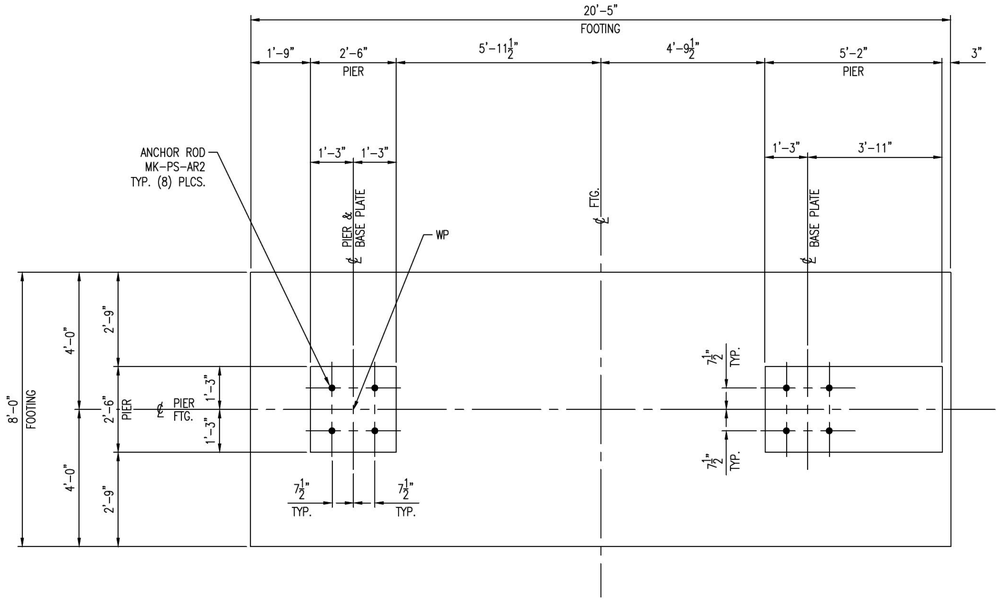

MK-PS-0500-F32
1/2" = 1'-0"
PLAN VIEW

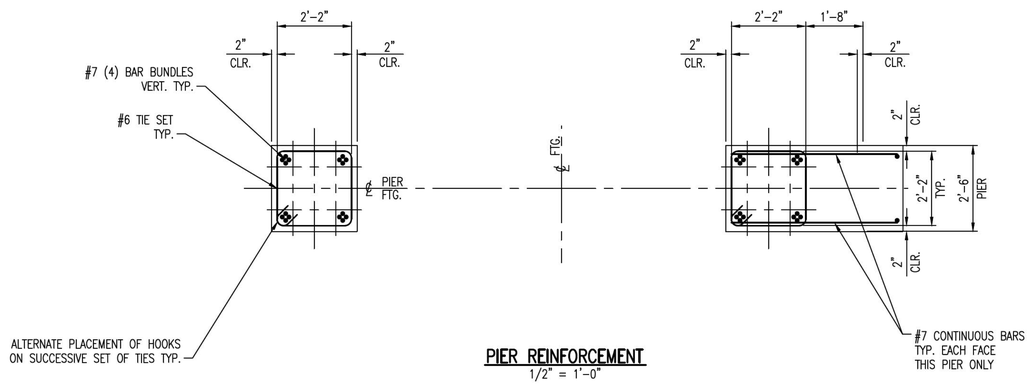

PIER REINFORCEMENT
1/2" = 1'-0"

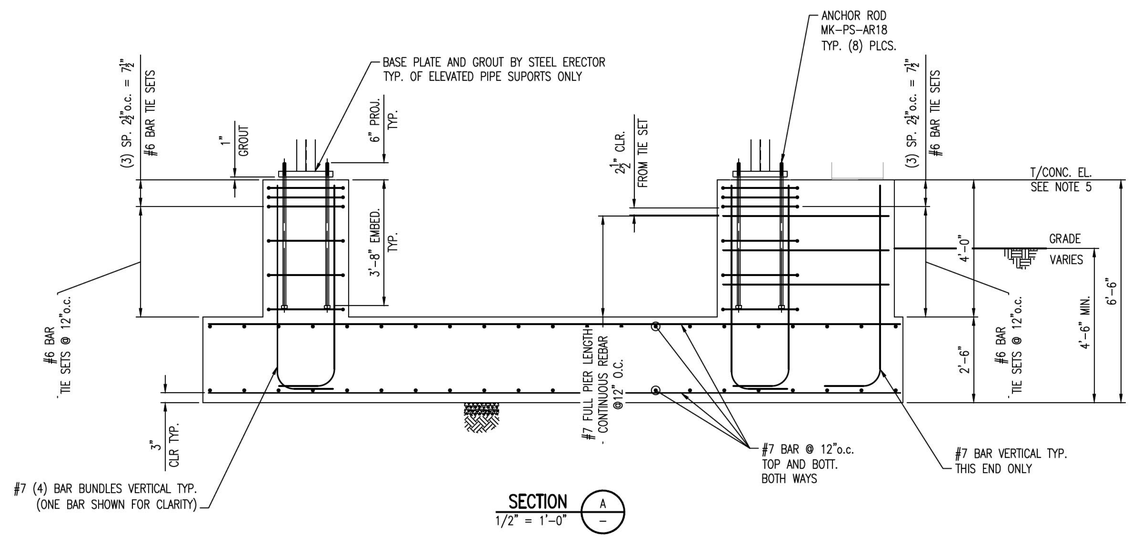

SECTION
1/2" = 1'-0"

PRELIMINARY
NOT FOR CONSTRUCTION

NOTES:
1. FOR CONCRETE GENERAL NOTES SEE DWG 0100-FD-001.
2. BASE PLATE:
   A. SEE DWG 0100-FD-002 FOR DETAILS.
   B. TOLERANCE ON ELEVATION OF TOPS OF EMBEDDED PLATES ARE ±⅛"
   C. BASE PLATES TO BE PROVIDED BY CONCRETE CONTRACTOR
3. ANCHOR ROD, SEE DWG 0100-FD-001 FOR SCHEDULE.
4. ALL REBAR DIMENSIONS ARE TO OUTSIDE OF REBAR U.N.O.
5. SEE FOOTING AND FOUNDATION PLOT PLAN FOR T/CONC. ELEVATIONS.

Footing Schedule Area 0500 Pipe

NO.	DATE	REVISION	BY	CK'D	APP
HH	11/14/14		NLB	–	–

R&M ENGINEERING CONSULTANTS
SALT LAKE CITY, UTAH
(801)263-3419
13014

TESORO SAVAGE

THIS DRAWING CONTAINS PROPRIETARY AND PRIVILEGED INFORMATION OF TESORO SAVAGE PETROLEUM LLC AND SHALL NOT BE DISCLOSED OR USED FOR THE BENEFIT OF OTHERS WITHOUT PRIOR WRITTEN PERMISSION OF THE DRAWING OWNER.

CUSTOMER: TESORO SAVAGE PETROLEUM TERMINAL LLC

PROJECT: TESORO SAVAGE VANCOUVER ENERGY DISTRIBUTION TERMINAL LLC
PORT OF VANCOUVER, WASHINGTON

DESCRIPTION: AREA 0500 PIPE EXPANSION LOOP FOOTING SCHEDULE
MK-PS-0500-F32

DESIGN:	MWD	START DATE:	10-20-14	SCALE:	NTS
DRAWN:	MWD	PRINT DATE:		PROJECT MANAGER:	DC
CHECKED:	–	APPROVED:		SIZE:	24x36

DRAWING NUMBER	SHEET	REV.
0500-FD-035	1/1	HH

EX-0001-007643-PCE

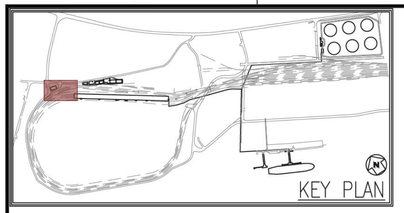

BRIDGE BENT TABLE
FOR DETAILS SEE DWG 0600-FD-005

Bridge Bent #	T/Conc.	B/Conc. Ftg.	Ftg Mark #
B1B1	32.42'	24.92'	MK-PS-0600-F1
B1B2	32.42'	24.92'	MK-PS-0600-F1
B1B3	32.42'	24.92'	MK-PS-0600-F2
B1B4	32.42'	24.92'	MK-PS-0600-F3
B2B1	34.42'		
B2B2	34.42'		
B2B3	34.42'	26.92'	MK-PS-0600-F5
B2B4	34.42'	26.92'	MK-PS-0600-F4
B2B5	34.42'	26.92'	MK-PS-0600-F4

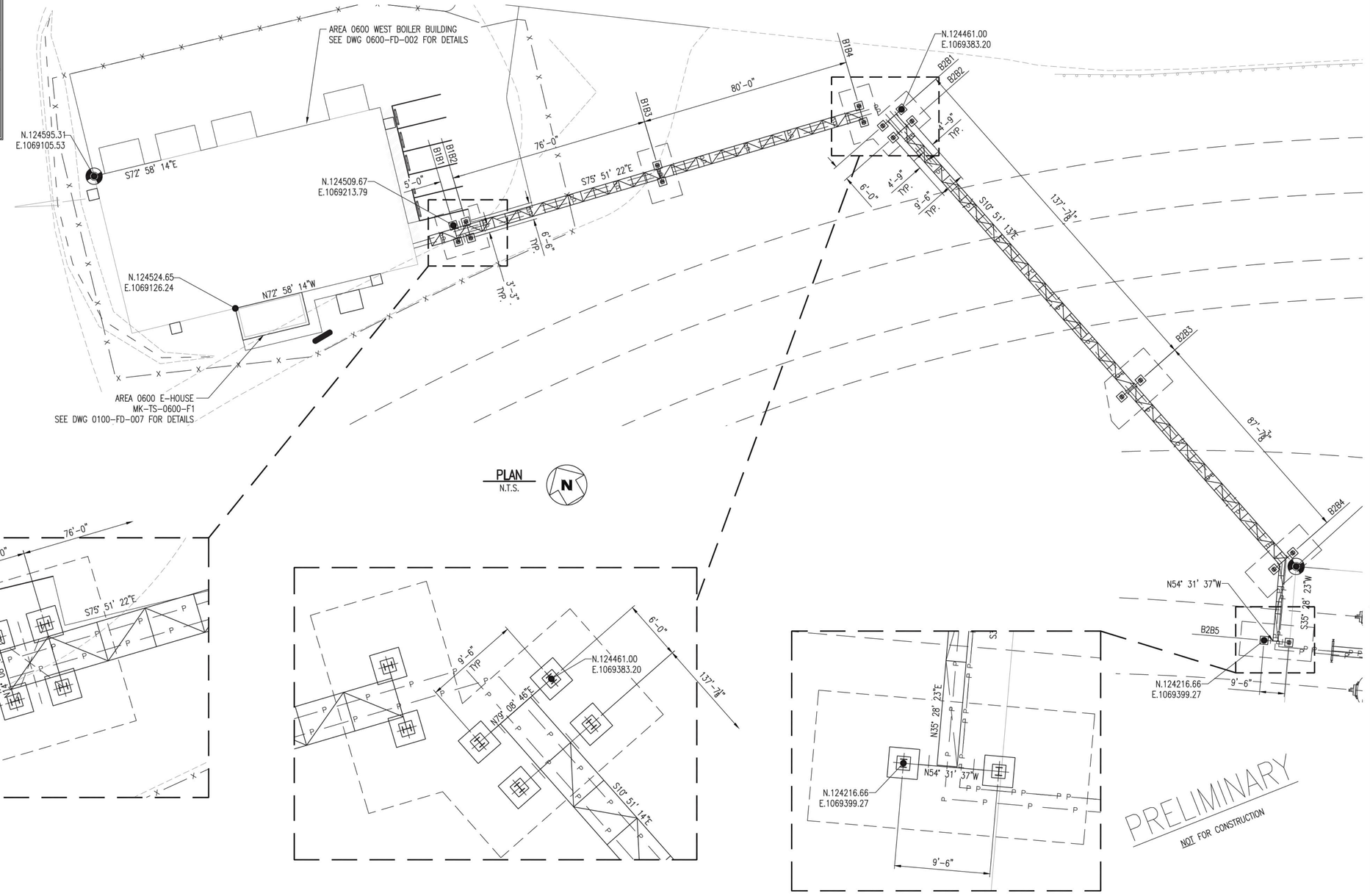

NO.	DATE	REVISION	BY	CK'D	APP
–	–	–	–	–	–
HH	11-14-14		NLB	–	–

13014 FOUNDATION PLOT PLAN 11-12-14

R&M ENGINEERING CONSULTANTS
SALT LAKE CITY, UTAH
(801)263-3419

13014

TESORO SAVAGE

THIS DRAWING CONTAINS PROPRIETARY AND PRIVILEGED INFORMATION OF TESORO SAVAGE PETROLEUM LLC AND SHALL NOT BE DISCLOSED OR USED FOR THE BENEFIT OF OTHERS WITHOUT PRIOR WRITTEN PERMISSION OF THE DRAWING OWNER.

CUSTOMER: TESORO SAVAGE PETROLEUM TERMINAL LLC

PROJECT: TESORO SAVAGE VANCOUVER ENERGY DISTRIBUTION TERMINAL LLC
PORT OF VANCOUVER, WASHINGTON

DESCRIPTION: AREA 0600 – FOOTING & FOUNDATION PLOT PLAN

DESIGN:	START DATE: 07-31-13	SCALE:	1"=250'
DRAWN: NMJ	PRINT DATE:	PROJECT MANAGER:	DC
CHECKED:	APPROVED:	SIZE:	24x36
DRAWING NUMBER		SHEET	REV.
0600-FD-001		1/1	HH

EX-0001-007644-PCE

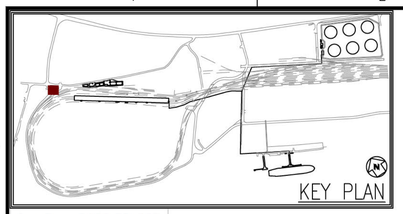

See Dwg 0100-FD-005
For Footing Schedule

Column Lines	Ftg. Mk
A1	MK-PB-0600-F1
A2	MK-PB-0600-F2
A3	MK-PB-0600-F2
A4	MK-PB-0600-F2
A5	MK-PB-0600-F2
A6	MK-PB-0600-F1
B1	MK-PB-0600-F2
B2	MK-PB-0600-F2
C1	MK-PB-0600-F2
C2	MK-PB-0600-F2
D1	MK-PB-0600-F1
D2	MK-PB-0600-F2
D3	MK-PB-0600-F2
D4	MK-PB-0600-F2
D5	MK-PB-0600-F2
D6	MK-PB-0600-F1

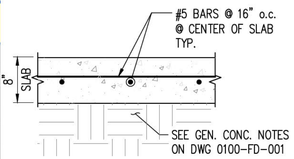

SECTION A
1"=1'-0"
TYP. SLAB
SECTION

NOTE: FLOOR SLAB SHALL HAVE CONTROL OR CONSTRUCTION JOINTS AT NO MORE THAN 16'-0"o.c. BOTH WAYS. SEE DETAIL 1

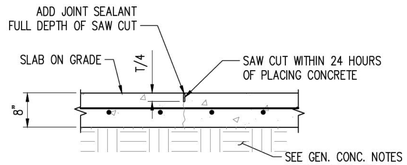

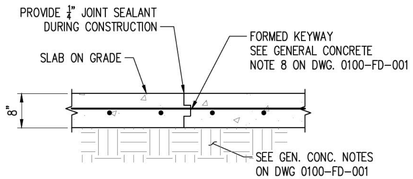

DETAIL 1
N.T.S.
TYP FLOOR SLAB
CONTROL JOINT /
CONSTRUCTION JOINT

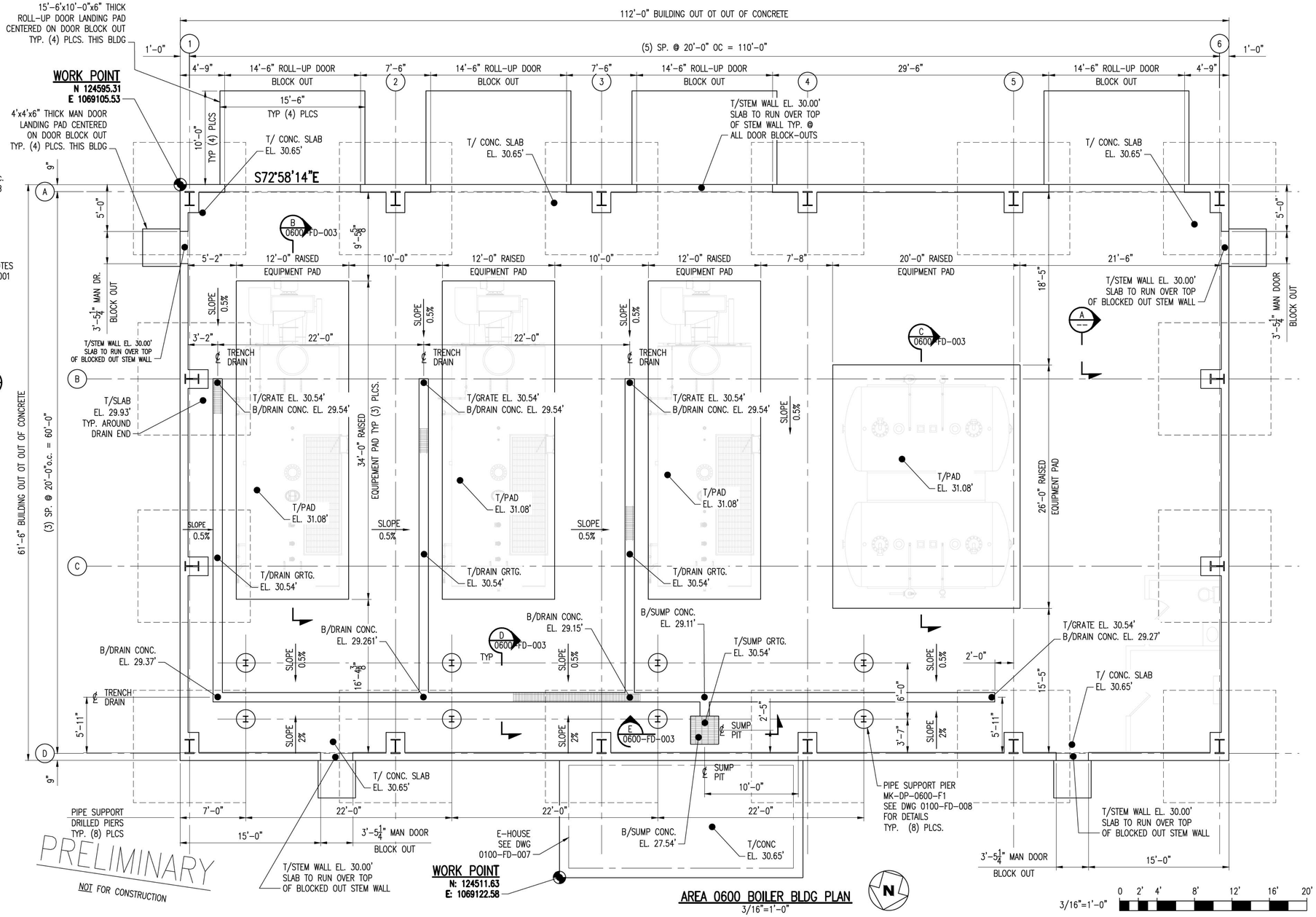

PRELIMINARY
NOT FOR CONSTRUCTION

AREA 0600 BOILER BLDG PLAN
3/16"=1'-0"

3/16"=1'-0" 0 2' 4' 8' 12' 16' 20'

NOTES:

1. FOR EQUIPMENT PADS SEE DWG 0600-FD-003
2. PIPE DRILLED PIER DETAILS SEE DWG 0100-FD-008
3. FOR ANCHOR ROD LOCATIONS SEE STEEL BLDG DWG. BY _____
4. FOR CONCRETE GENERAL NOTES SEE DWG 0100-FD-001.

NO.	DATE	REVISION	BY	CK'D	APP
–	–	–	–	–	–
HH	11/14/14		NLB	–	–

13014 Foundation Area 0300 & 0600 11-12-14

R&M ENGINEERING CONSULTANTS
SALT LAKE CITY, UTAH
(801)263-3419
13014

TESORO SAVAGE

THIS DRAWING CONTAINS PROPRIETARY AND PRIVILEGED INFORMATION OF TESORO SAVAGE PETROLEUM LLC AND SHALL NOT BE DISCLOSED OR USED FOR THE BENEFIT OF OTHERS WITHOUT PRIOR WRITTEN PERMISSION OF THE DRAWING OWNER.

CUSTOMER: TESORO SAVAGE PETROLEUM TERMINAL LLC

PROJECT: TESORO SAVAGE VANCOUVER ENERGY DISTRIBUTION TERMINAL LLC
PORT OF VANCOUVER, WASHINGTON

DESCRIPTION: AREA 0600 WEST BOILER FOUNDATION PLAN VIEW

DESIGN:	START DATE: 08-15-13	SCALE:	AS SHOWN
DRAWN: JBH	PRINT DATE:	PROJECT MANAGER:	DC
CHECKED:	APPROVED:	SIZE:	24x36
DRAWING NUMBER		SHEET	REV.
0600-FD-002		1/1	HH

EX-0001-007645-PCE

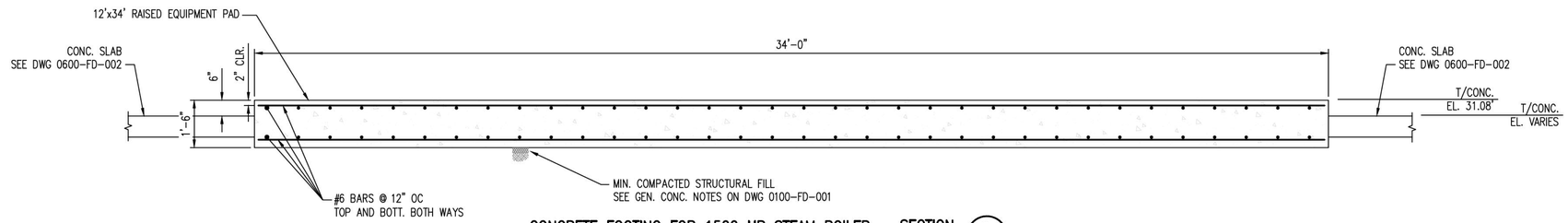

CONCRETE FOOTING FOR 1500 HP STEAM BOILER
TYP. (3) PLCS.

SECTION B
1/2"=1'-0"
0600-FD-002

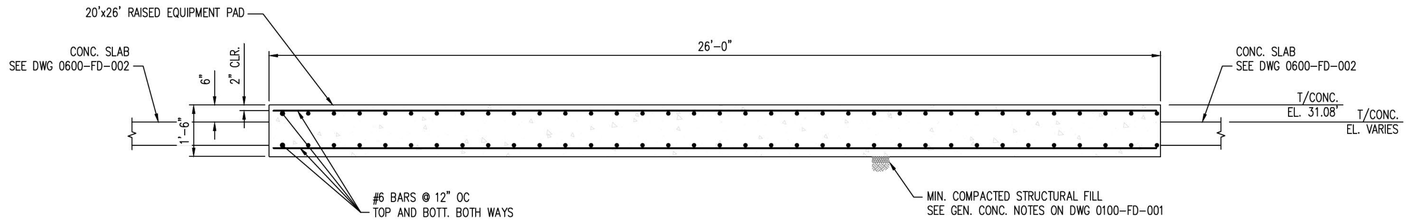

CONCRETE FOOTING FOR (2) 5600 GAL DEAERATORS

SECTION C
1/2"=1'-0"
0600-FD-002

PRELIMINARY
NOT FOR CONSTRUCTION

NOTES:

1. FOR ANCHOR ROD LOCATIONS SEE STEEL BLDG DWG. BY
2. FOR CONCRETE GENERAL NOTES SEE DWG 0100-FD-001.

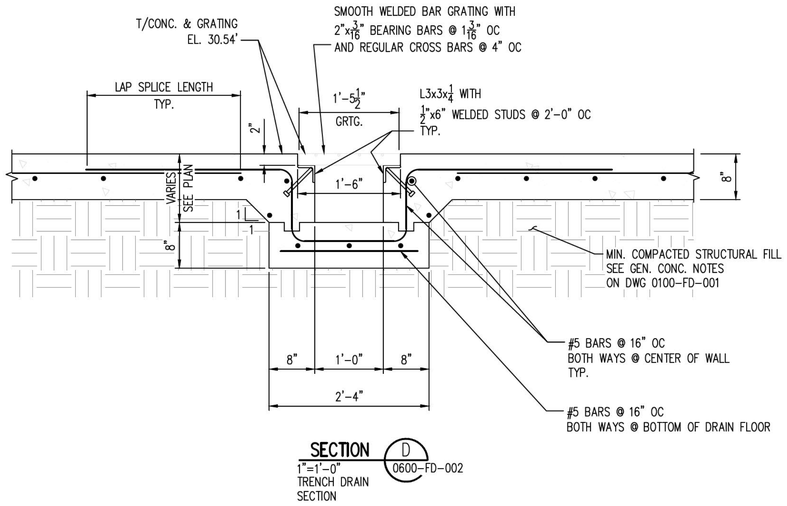

SECTION D
1"=1'-0"
TRENCH DRAIN
SECTION
0600-FD-002

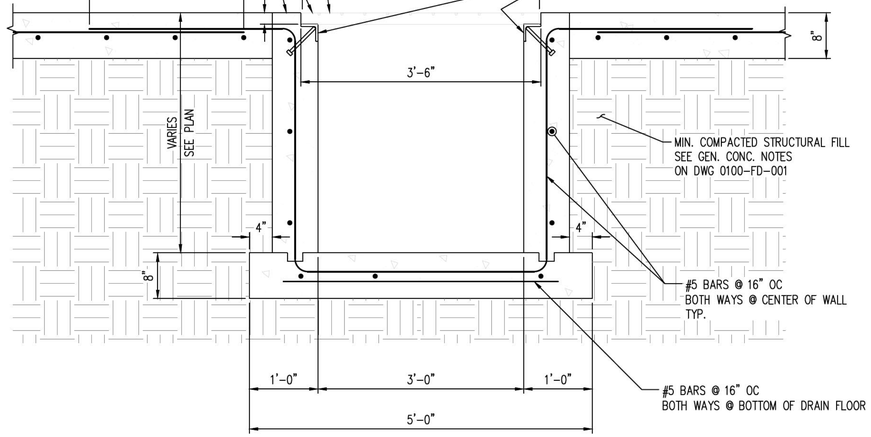

SECTION E
1"=1'-0"
SUMP
SECTION
0600-FD-002

1/2"=1'-0" 0 1' 2' 4' 6' 8'

NO.	DATE	REVISION	BY	CK'D	APP
–	–	–	–	–	–
HH	11/14/14		NLB	–	–

13014 Foundations Area 0300 & 0600 11-12-14

R&M ENGINEERING CONSULTANTS
SALT LAKE CITY, UTAH
(801)263-3419
13014

TESORO SAVAGE

THIS DRAWING CONTAINS PROPRIETARY AND PRIVILEGED INFORMATION OF TESORO SAVAGE PETROLEUM LLC AND SHALL NOT BE DISCLOSED OR USED FOR THE BENEFIT OF OTHERS WITHOUT PRIOR WRITTEN PERMISSION OF THE DRAWING OWNER.

CUSTOMER: TESORO SAVAGE PETROLEUM TERMINAL LLC

PROJECT: TESORO SAVAGE VANCOUVER ENERGY DISTRIBUTION TERMINAL LLC
PORT OF VANCOUVER, WASHINGTON

DESCRIPTION: AREA 0600 WEST BOILER
EQUIPMENT PADS & TRENCH DETAILS

DESIGN:	MWD	START DATE:	08-12-13	SCALE:	AS SHOWN
DRAWN:	MWD	PRINT DATE:		PROJECT MANAGER:	DC
CHECKED:	MRD	APPROVED:		SIZE:	24x36

DRAWING NUMBER	SHEET	REV.
0600-FD-003	1/1	HH

EX-0001-007646-PCE

FOOTING SCHEDULE

FTG. MK.	FTG. TYPE	LOCATION OR DWG. NO.	CONCRETE DIMENSIONS									ANCHOR RODS				ELEVATIONS		REINFORCING STEEL							REMARKS	MADE BY	CHK'D BY
			A	B	C	D	E	F	G	H	PIER TYPE	J	K	L	M	N	P	X_1	X_2	X_3	X_4	X_5	X_6	X_7			
MK-0600-PS-F1	B	0600-FD-001	20'-6"	12'-0"	7'-0"	6'-6"	3'-0"	3'-0"		3'-0"	1	1'-2"	1'-2"	6"	MK-PS-AR17	SEE FOOTING AND FOUNDATION PLOT PLANS FOR T/CONCRETE ELEVATIONS		#7 @ 9"O.C.	#7 @ 9"O.C.	#7 @ 9"O.C.	#7 @ 9"O.C.	#6 (4-BAR BUNDLE)	#6 @ 12"O.C.	#6 @ 2½"O.C.	STEAM PIPE BRIDGE #1 / BENT #1 & #2	MWD	
MK-0600-PS-F2	C	0600-FD-001	17'-0"	17'-0"	7'-0"	6'-6"	3'-0"	3'-0"	5'-0"	3'-0"	1	1'-2"	1'-2"	6"	MK-PS-AR17			#7 @ 9"O.C.	#7 @ 9"O.C.	#7 @ 9"O.C.	#7 @ 9"O.C.	#6 (4-BAR BUNDLE)	#6 @ 12"O.C.	#6 @ 2½"O.C.	STEAM PIPE BRIDGE #1 / BENT #3	MWD	
MK-0600-PS-F3	D	0600-FD-001	SEE FOOTING TYPE D							3'-0"	1	1'-2"	1'-2"	6"	MK-PS-AR17			#7 @ 9"O.C.	#7 @ 9"O.C.	#7 @ 9"O.C.	#7 @ 9"O.C.	#6 (4-BAR BUNDLE)	#6 @ 12"O.C.	#6 @ 2½"O.C.	STEAM PIPE BRIDGE #1 BENT #4 STEAM PIPE BRIDGE #2 BENT #1 & #2	MWD	
MK-0600-PS-F4	C	0600-FD-001	21'-6"	14'-0"	6'-0"	9'-6"	3'-0"	3'-0"	6'-0"	3'-0"	1	1'-2"	1'-2"	6"	MK-PS-AR17			#7 @ 6"O.C.	#7 @ 6"O.C.	#7 @ 6"O.C.	#7 @ 6"O.C.	#6 (4-BAR BUNDLE)	#6 @ 12"O.C.	#6 @ 2½"O.C.	STEAM PIPE BRIDGE #2 / BENT #4, & #5	MWD	
MK-0600-PS-F5	E	0600-FD-001	SEE FOOTING TYPE E							3'-0"	1	1'-2"	1'-2"	6"	MK-PS-AR17			#7 @ 6"O.C.	#7 @ 6"O.C.	#7 @ 6"O.C.	#7 @ 6"O.C.	#6 (4-BAR BUNDLE)	#6 @ 12"O.C.	#6 @ 2½"O.C.	STEAM PIPE BRIDGE #2 / BENT #3	MWD	

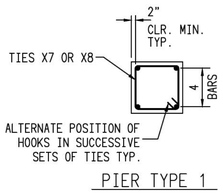

PIER TYPE 1

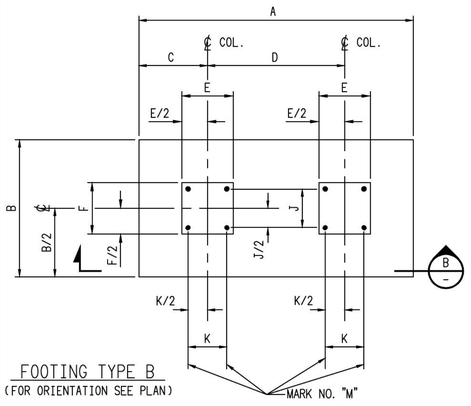

FOOTING TYPE B
(FOR ORIENTATION SEE PLAN)

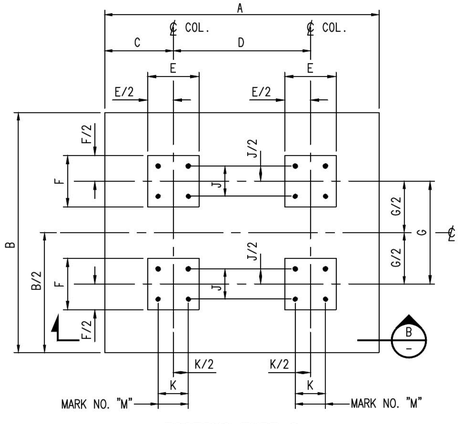

FOOTING TYPE C
(FOR ORIENTATION SEE PLAN)

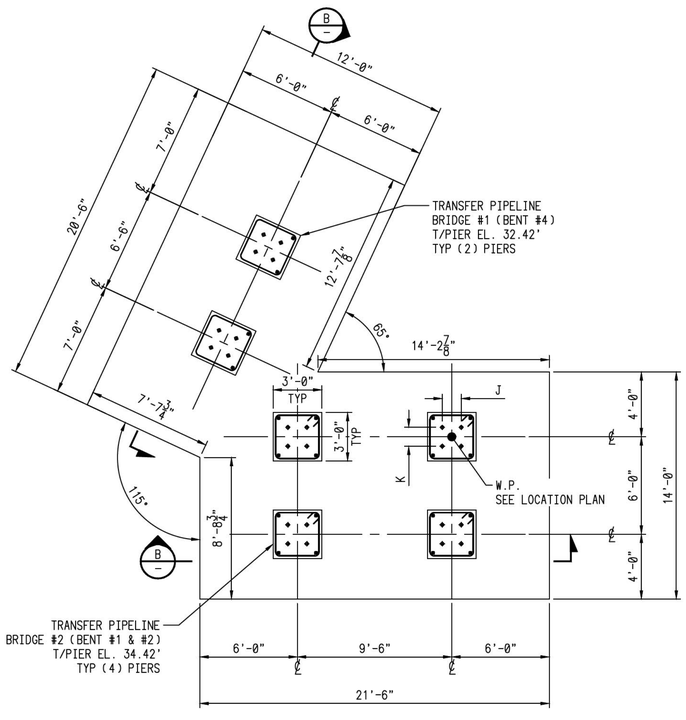

FOOTING TYPE D
(FOR ORIENTATION SEE PLAN)

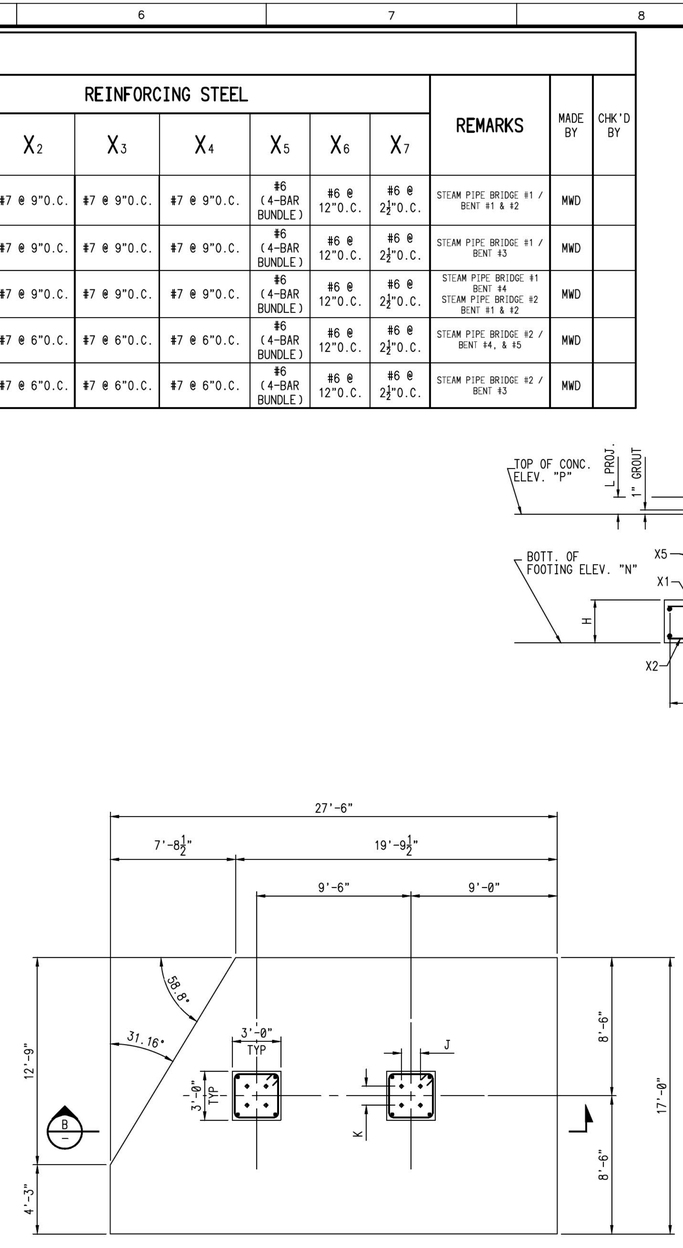

FOOTING TYPE E
(FOR ORIENTATION SEE PLAN)

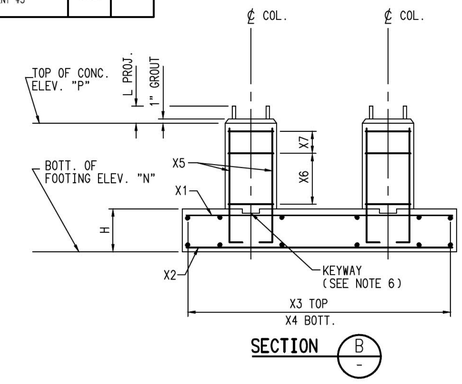

SECTION B

PRELIMINARY
NOT FOR CONSTRUCTION

NOTES:

1. FOR CONCRETE GENERAL NOTES SEE DWG 0100-FD-001.
2. TOLERANCE ON ELEVATION OF TOPS OF EMBEDDED PLATES ARE ±⅛"
3. FOR ANCHOR ROD SCHEDULE SEE DWG 0100-FD-001.
4. ALL DOWELS TO HAVE STD. 90° HOOKS IN FTG PER ACI 318 LATEST EDITION.
5. ALL CLEARANCES 2" MIN. U.N.O.
6. FOR KEYWAY SEE GENERAL CONC. NOTE #8 ON DWG 0100-FD-001.
7. ALL REBAR DIMENSIONS ARE TO OUTSIDE OF REBAR U.N.O.

NO.	DATE	REVISION	BY	CK'D	APP
HH	11/14/14		MWD	–	–

Footing Schedule Area 0600

R&M ENGINEERING CONSULTANTS
SALT LAKE CITY, UTAH
(801)263-3419

13014

TESORO SAVAGE

THIS DRAWING CONTAINS PROPRIETARY AND PRIVILEGED INFORMATION OF TESORO SAVAGE PETROLEUM LLC AND SHALL NOT BE DISCLOSED OR USED FOR THE BENEFIT OF OTHERS WITHOUT PRIOR WRITTEN PERMISSION OF THE DRAWING OWNER.

CUSTOMER: TESORO SAVAGE PETROLEUM TERMINAL LLC

PROJECT: TESORO SAVAGE VANCOUVER ENERGY DISTRIBUTION TERMINAL LLC
PORT OF VANCOUVER, WASHINGTON

DESCRIPTION:
AREA 0600 PIPE BRIDGE FOOTING SCHEDULE
DETAILS, SECTION VIEWS & TABLE

DESIGN:	MWD	START DATE:	10/31/14	SCALE:	NTS
DRAWN:	MWD	PRINT DATE:	11/14/14	PROJECT MANAGER:	DC
CHECKED:	–	APPROVED:		SIZE:	24x36

DRAWING NUMBER	SHEET	REV.
0600-FD-005	1/1	HH

EX-0001-007647-PCE